US00D388198S

United States Patent [19]

Weber

[11] Patent Number: Des. 388,198

[45] Date of Patent: **Dec. 23, 1997

[54] **FIBER OPTIC ACCENT LIGHT**

[75] Inventor: **Michael E. Weber**, Blacksburg, Va.

[73] Assignee: **Virginia Tech Intellectual Properties, Inc.**, Blacksburg, Va.

[**] Term: **14 Years**

[21] Appl. No.: **65,001**

[22] Filed: **Jan. 15, 1997**

[51] **LOC (6) Cl.** **26-05**

[52] **U.S. Cl.** **D26/27**; D26/64; D26/75

[58] **Field of Search** 362/147, 404–408, 362/432, 32, 269, 275, 287, 418, 419, 427; D26/60, 62, 63, 65, 64, 66, 27, 75, 76, 77, 78

[56] **References Cited**

U.S. PATENT DOCUMENTS

D. 261,180	10/1981	Lagin	D26/66
4,819,138	4/1989	Polick	362/419
4,821,162	4/1989	Ellis	362/147 X
5,140,508	8/1992	Komonko	362/427 X

OTHER PUBLICATIONS

Author—None (Advertisement), "Design Journal—The Monthly Journal of Design and Architecture", Sep. 1996, p. 20, vol. 9, No. 9, Publishers: John Moses & John Platter, Los Angeles, CA, USA.

Primary Examiner—Susan J. Lucas
Attorney, Agent, or Firm—Joy L. Bryant

[57] **CLAIM**

The ornamental design for a fiber optic accent light, as shown.

DESCRIPTION

FIG. **1** is a perspective view of a fiber optic accent light showing my new design;
FIG. **2** is a bottom view thereof;
FIG. **3** is a top view thereof;
FIG. **4** is a left side view thereof;
FIG. **5** is a rear view thereof;
FIG. **6** is a right side view thereof; and,
FIG. **7** is a front view thereof.

1 Claim, 3 Drawing Sheets

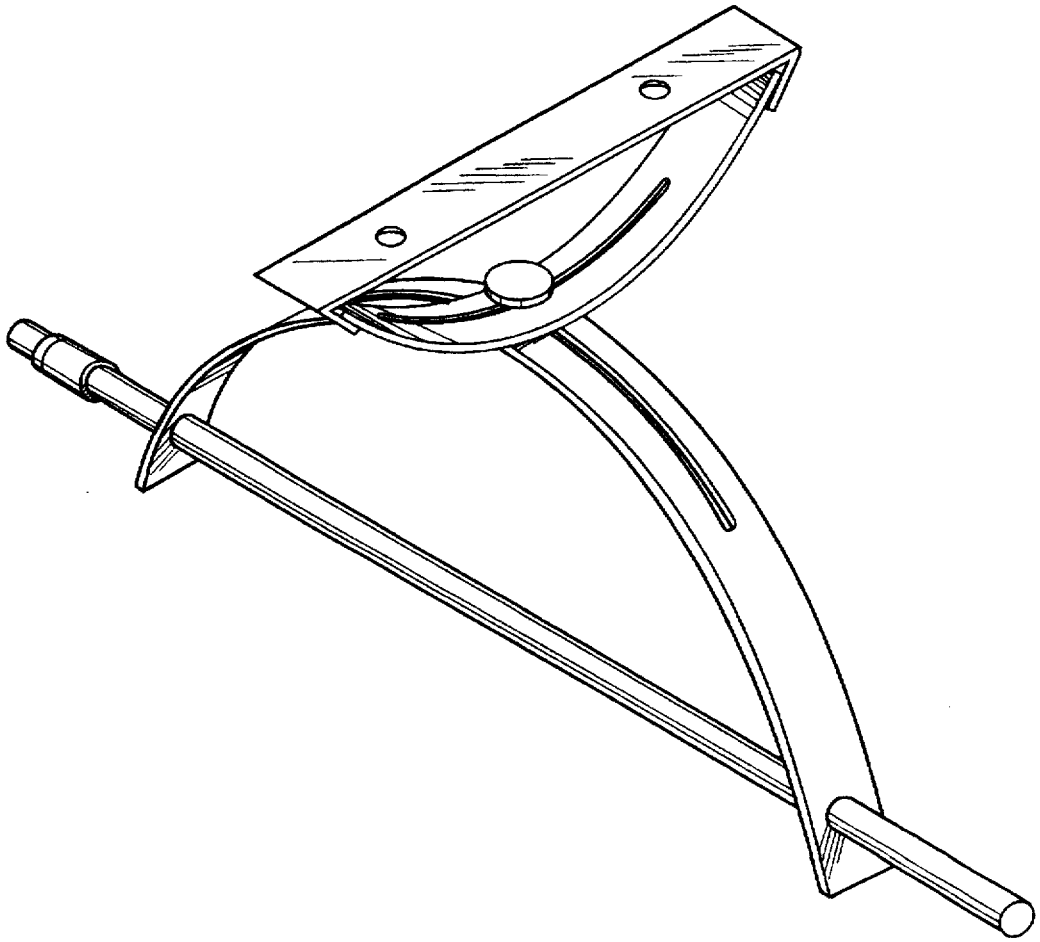

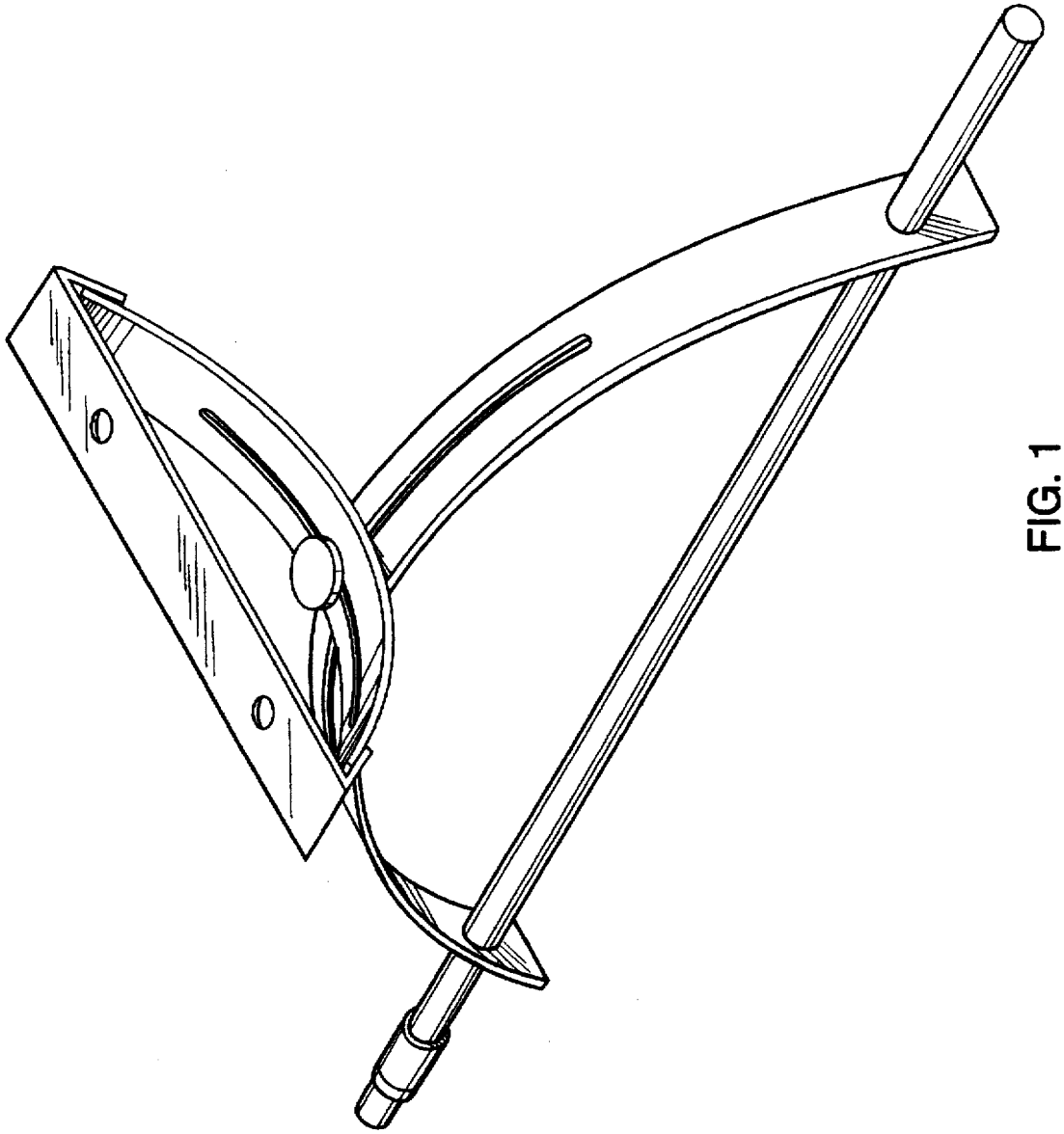

FIG. 1

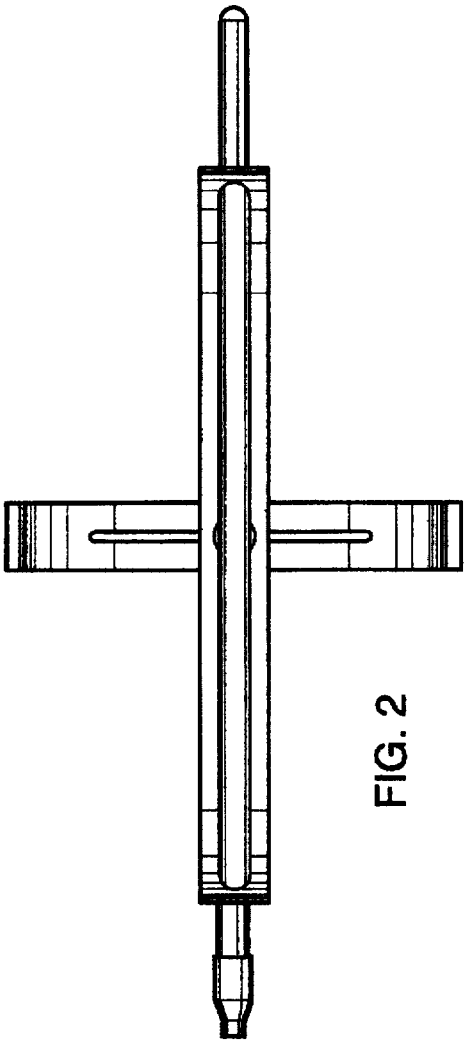

FIG. 2

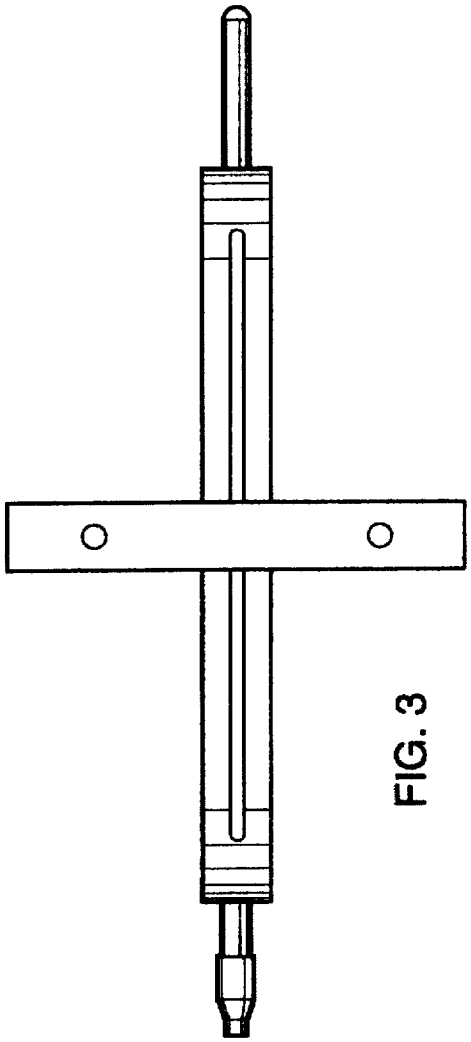

FIG. 3

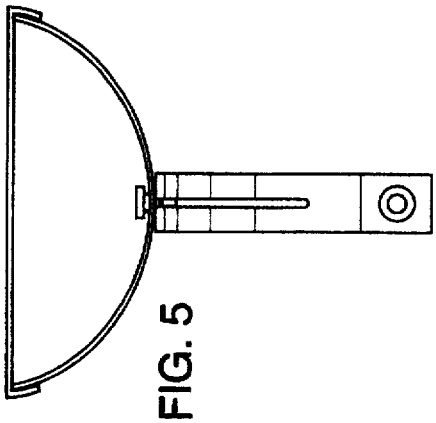

FIG. 5

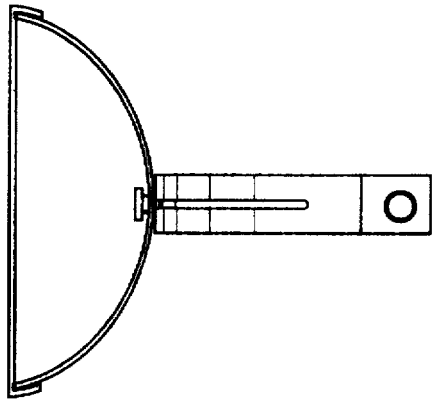

FIG. 7

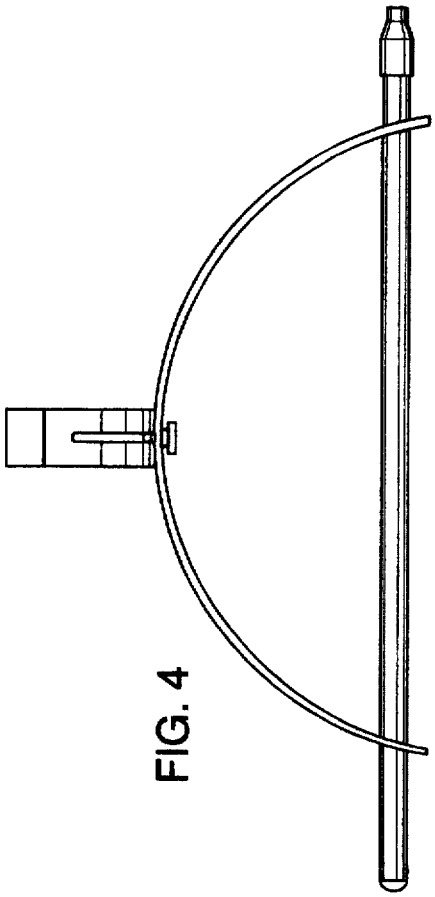

FIG. 4

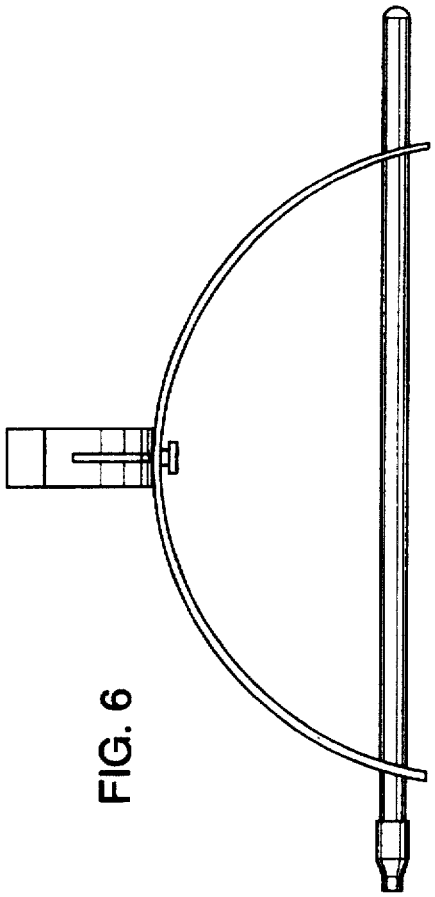

FIG. 6