United States Patent [19]

Zentmeyer, Jr.

[11] **3,712,292**

[45] **Jan. 23, 1973**

[54] **METHOD AND APPARATUS FOR PRODUCING SWEPT FREQUENCY-MODULATED AUDIO SIGNAL PATTERNS FOR INDUCING SLEEP**

[75] Inventor: **John E. Zentmeyer, Jr.**, Charlottesville, Va.

[73] Assignee: **Karen V. Lafley**, Charlottesville, Va.

[22] Filed: **July 20, 1971**

[21] Appl. No.: **164,389**

[52] **U.S. Cl.** .....**128/1 C**

[51] **Int. Cl.** **A61n 1/34**

[58] **Field of Search** .....128/1 C; 179/1 AA

[56] **References Cited**

UNITED STATES PATENTS

3,014,477	12/1961	Carlin	128/1 C
2,304,095	12/1942	Hull	128/1 C
3,140,709	7/1964	Weisz	128/1 R

FOREIGN PATENTS OR APPLICATIONS

1,165,541	10/1969	Great Britain	128/1 C

Primary Examiner—William E. Kamm
Attorney—Thomas B. Van Poole et al.

[57] **ABSTRACT**

A method of producing sound signals for inducing sleep in a human being, and apparatus therefor together with REPRESENTATIONS thereof in recorded form, wherein an audio signal is generated representing a familiar, pleasing, repetitive sound, modulated by continuously sweeping frequencies in two selected frequency ranges having the dominant frequencies which occur in electrical wave patterns of the human brain during certain states of sleep. The volume of the audio signal is adjusted to mask the ambient noise and the subject can select any of several familiar, repetitive sounds most pleasing to him.

13 Claims, 2 Drawing Figures

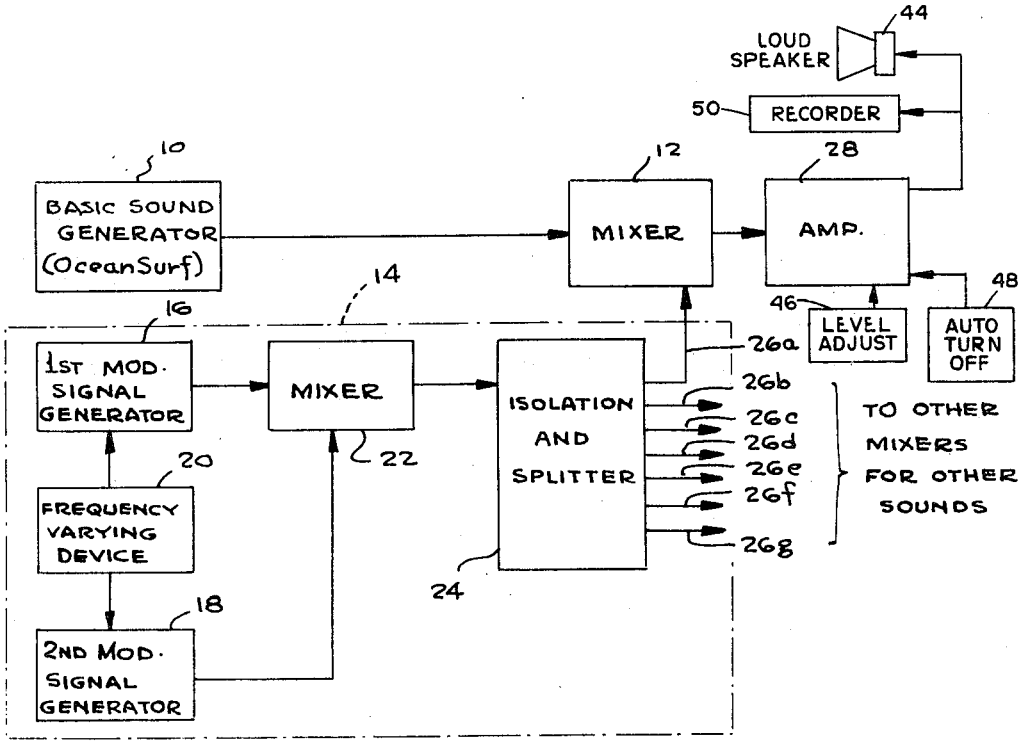

Fig-1

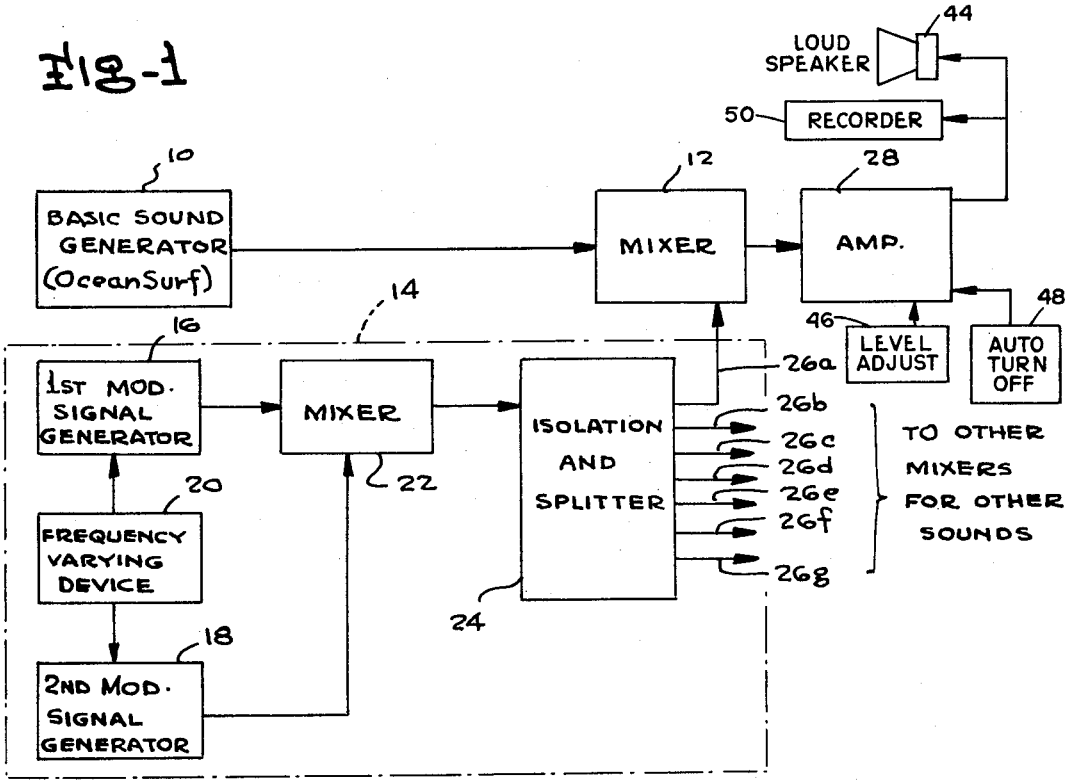

Fig-2

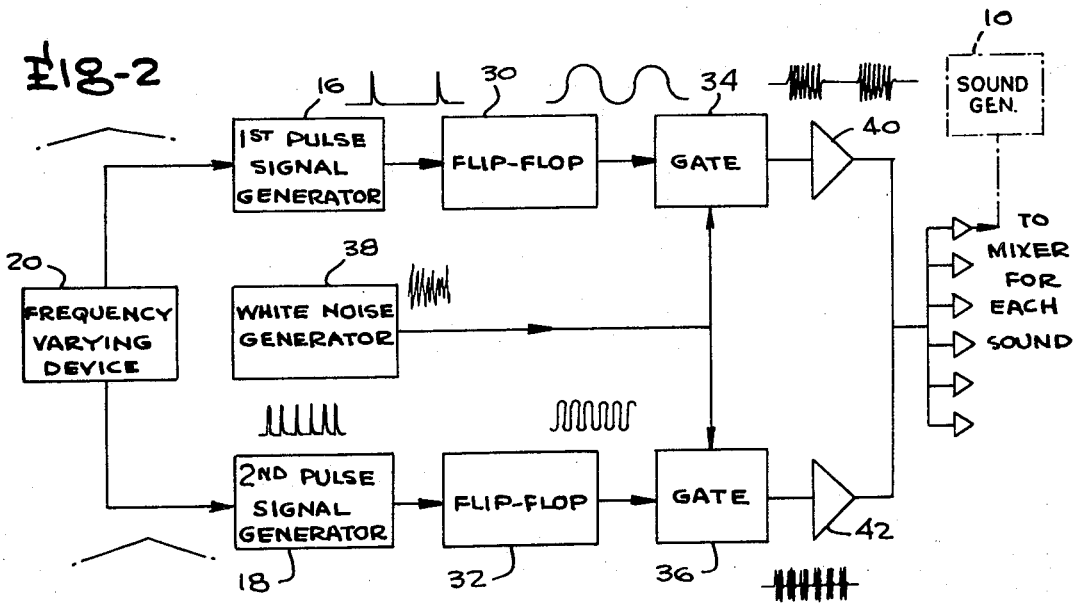

INVENTOR

JOHN E. ZENTMEYER, JR.

BY Mason, Fenwick & Lawrence

ATTORNEYS

METHOD AND APPARATUS FOR PRODUCING SWEPT FREQUENCY-MODULATED AUDIO SIGNAL PATTERNS FOR INDUCING SLEEP

BACKGROUND AND OBJECTS OF THE INVENTION

The present invention relates in general to a method and apparatus for producing sounds for inducing sleep in a human being, and more particularly to a method and apparatus for producing sleep inducing sounds by the generation of composite audio signal patterns formed by modulating a familiar, pleasing, repetitive sound with continuously sweeping frequencies in first and second frequency ranges resembling electrical wave patterns of the human brain during certain states of sleep.

The use of audio generators to induce sleep has been previously known, as for example in U. S. Pat. Nos. 2,711,165 and 3,384,074, wherein audio signals are generated which represent pleasing and harmonious steady sounds or cyclically varying repetitive sounds resembling sounds found in nature or in the normal environment of the individual. It has also been proposed to induce sleep by the generation of an audio signal which is varied at a rate somewhat slower than the rate of heartbeat or respiration to tend to cause the heartbeat and respiration of the individual to synchronize with the audio signal.

It has also been proposed to induce sleep by generating an audio signal which is a familiar, pleasing, repetitive sound modulated by a selected fixed frequency which is found in an electroencephalographic sleep pattern produced by the human brain during sleep, for example by modulating the pleasing sound with what are termed theta waves having a frequency of 6 cycles per second (cps) and with a wave of sleep spindles which are short bursts of waves at a frequency of about 14 cps, the modulating signal also including delta waves having a frequency of 1 cps such as occur in the EEG sleep pattern for stage-3 and stage-4 sleep. However, it has been found that the frequency of the delta waves in the EEG sleep pattern for different individuals may occur anywhere within the frequency range of about 0.8 cps to 1.8 cps, and that a person whose EEG sleep pattern has a delta wave frequency within this range which does not precisely coincide with 1 cps does not respond effectively to the composite sleep inducing signal. The same sharp frequency response characteristic is found to be true of theta wave response.

An object of the present invention is the provision of a method and apparatus for producing signals for inducing sleep in a broad spectrum of different individuals, wherein a familiar, repetitive, pleasing sound is modulated by a first modulation signal whose frequency is continuously swept through a first preselected frequency range and is also modulated by a second modulation signal which is continuously swept through a second frequency range, which frequency ranges include the frequencies of certain EEG electrical wave signals encountered during sleep.

Another object of the present invention is the provision of a method and apparatus for producing signals for inducing sleep as described in the preceding paragraph, wherein the first modulation signals are swept through a frequency range of about 0.8 to 1.8 cycles per second and the second modulation signals are swept through a frequency range of about 5.5 to 6.75 cycles per second.

Other objects, advantages and capabilities of the present invention will become apparent from the following detailed description, taken in conjunction with the accompanying drawing illustrating apparatus which may be employed to produce the sleep inducing sounds.

BRIEF DESCRIPTION OF THE DRAWING

FIG. 1 is a block diagram of one system that may be used to generated the sleep inducing sounds in accordance with the present invention; and

FIG. 3 is a block diagram of another system that may be employed to produce the sleep inducing sounds.

DETAILED DESCRIPTION OF THE PREFERRED EMBODIMENTS OF THE INVENTION

An electroencephalogram (EEG) is a device for measuring the flucuation of electrical potentials due to the electrical activity of the brain. It has been found through the use of the EEG that various patterns of electrical potentials are generated for different states of consciousness. The primary states that can be distinguished are the states of waking and sleeping. Within the waking state, one can distinguish various degrees of activation or alertness, ranging from rather frantic hyperaltertness through relaxed attentiveness to drowsiness. Extreme alertness is associated with a low voltage, generally fast and irregular pattern of about 10 to 20 microvolts amplitude and frequencies ranging from 10 to 40 cycles per second (cps). Relaxed alertness is accompanied in many people by the alpha rhythm, a rather irregular, sinusoidal rhythm whose frequency varies from about 8 to 13 cycles per second, although in a single person this frequency is relatively constant. As a person becomes drowsy, this alpha rhythm breaks up, clusters of it becoming less and less frequent as they are replaced by a stage-1 drowsy pattern.

The EEG pattern for the first state of sleep, or stage-1 sleep, consists of an irregular mixture of theta waves which are low in amplitude and have a frequency lying in the range between 4 and 8 cps, the mixture of theta waves being accompanied by occasional alpha waves and irregularly appearing alphoid waves, which are waves similar to the alpha rhythm waves but 1 or 2 cps slower than the subject's waking alpha rhythm.

The EEG pattern for stage-2 sleep, wherein sleep is definitely present, is similar to the stage-1 drowsy pattern except that a new kind of wave pattern, termed the sleep spindle, appears. The sleep spindle is a short burst of waves at about 14 cps frequency, which starts at a very low amplitude, builds up to about 30–40 microvolts within a few cycles, and then tapers off, giving the overall wave train a spindle shape.

Sleep is further divided into stage-3 sleep and stage-4 sleep. These stages are characterized by the appearance of delta waves, which are relatively high voltage waves of an amplitude of 100 microvolts or more, and have a relatively low frequency of about 1 cps or slower. A few of these delta waves in the EEG pattern characterize stage-3, while a preponderence of them characterize the EEG pattern for stage-4 sleep. In stage-3 sleep and stage-4 sleep, the spindles and irregular theta waves continue to occur.

It has been recognized that various sensory inputs to the human body tended to produce relaxation, drowsiness and sleep. For example, the sensation of gentle rocking produces relaxation and sleep in some subjects tested. Eye fixation and fatigue have been most productive in bringing on drowsiness, but the effect did not continue or heighten beyond eye closure to any appreciable extent. Generation of audible sounds to provide sleep inducing inputs to the aural sense offers a number of advantages. The aural sense organ is the only body-perceptor mechanism that continues to function into the various stages of sleep as well as during relaxation and drowsiness. It has been determined that this sense of hearing functions not only in the first three stages of sleep, but functions to some degree in stage-4 sleep and into stages of anaesthesia. Also, induction of sleep by aural means permits greater subject control, as the process of sleep induction can be reversed or terminated with relative ease and promptness.

Certain familiar, repetitive, non-objective sounds or noises, such as certain sounds of nature or environmental sounds, tend to produce drowsiness and sleep. Conversely, the lack of such sounds tends to produce alertness and wakefulness. Thus a city dweller may sleep deeply with the steady rumble of traffic outside, but the sound of country crickets may sound so noisy to him that he cannot sleep. Each individual is receptive to certain sound patterns which are the product of his environmental conditioning, which will tend to produce relaxation and sleep. The most common of these to produce sleepiness are familiar, repetitive sounds such as rain on the roof, machinery hum, gentle wind, ocean surf, breathing, and heartbeat, to name a few examples.

Experiments have been conducted to attempt to induce sleep by an aural signal formed by amplitude modulating any of the pleasing repetitive sounds, as selected by the subject, with delta waves at a frequency of 1 cps resembling the waves which characterize the EEg pattern for stage-3 sleep, together with theta wave signals at a specific frequency, for example 6 cps, resembling the theta waves that occur in the EEG pattern for stage-1 or stage-2 sleep. For certain subjects, the results achieved by inducing sleep with such a signal were several magnitudes higher than induction of sleep by use of a pleasant sound only. However, it was discovered that the human brain acts in its response to the modulation frequencies in the aural signal in a manner similar to a highly tuned, sharp frequency response tank circuit, in that the particular frequency of the delta wave and theta wave modulation signals to which different individuals will responds to induce sleep will depart somewhat from the 1 cps and 6 cps delta and theta wave frequencies employed to modulate the pleasing repetitive sound. To achieve reliable induction of sleep in a broad spectrum of individuals whose EEG patterns may be characterized by delta waves and theta waves whose frequencies may be different from the 1 cps and 6 cps frequencies, the present invention involves the modulation of the basic familiar, repetitive, pleasing sound with a modulation signal which comprises delta wave signals which are continuously swept back-and-forth in frequency between 0.8 cps and 1.8 cps and with theta wave signals which are continuously swept in frequency back-and-forth between 5.5 cps and 6.75 cps. By continuously sweeping the frequencies of the delta wave and the theta wave signals back-and-forth within these ranges, there will be delta waves and theta waves of the specific frequency to which any individual desiring to have sleep induced will respond (i.e., the specific frequencies present in the delta wave and theta wave components of that individual's EEG pattern for stage-2 or stage-4 sleep).

In the practice of a preferred method of the invention, audio signals are produced near the bedside of the individual desiring to have sleep induced. The audio signals comprise a basic signal which is a familiar, repetitive sound which would be pleasing to the individual. Typically, the basic sound for a person living in an urban environment would be the sound of rain on a roof, a gentle wind, waves upon a beach, slow breathing, machinery hum, ocean surf, or similar examples. Preferably the individual desiring to have sleep induced should have the option of selecting which of such basic sounds should be produced. This basic sound in the form of a pleasing repetitive sound is modified, for example by amplitude modulating or mixing or both with a first modifying signal which is continuously swept back-and-forth in frequency between 0.8 cps and 1.8 cps, and is also modified, by modulation or mixing or both with a second modifying signal which is continuously swept back-and-forth in frequency between 5.5 cps and 6.75 cps, to respectively resemble the basic frequencies found in the delta wave patterns and theta wave patterns of EEG sleep signals. In one example, the amplitude of the first modifying signal is about 100 microvolts and the amplitude of the second modifying signals is about 100 microvolts.

The sleep inducing audio signals produced at the bedside of the subject desiring to have sleep induced may be produced by providing magnetic tapes or similar records on which are recorded the desired sleep inducing sounds, which tapes or other records are placed in a suitable conventional reproducer or playback device to produce audio output signals responsive to the tape or other sound record. Alternately, an audio generator may be provided in the room occupied by the individual which has the capability of providing the different basic familiar sound patterns to be selected by the individual, and the audio generator is provided with means for modifying the pleasing, repetitive sounds selected by the subject as the basic sound pattern, with modifying signals like the first and second varying frequency modifying signals described in the preceding paragraph, to produce the composite signal which includes signals sweeping back-and-forth in frequency between 0.8 and 1.8 cps and between 5.5 and 6.75 cps. Also, a central sound generator system including an audio generator and the modulation means as described above may be provided at a central location in a multiple room housing facility, such as a motel or hotel or an apartment building, and the output central sound generating device may be coupled to speakers or transducers in each of the rooms to be operated by the individual occupants to make the selection of the basic repetitive signal desired.

The volume level of the device used to produce the sleep inducing sounds at the location of the individual desiring to have sleep induced should be adjusted to be sufficient to mask the ambient noise in the environment

of the individual. This is accomplished by setting the volume level of the sleep inducing sounds to a particular level and listening for several moments to extraneous noise, and then adjusting the loudness of the sleep inducing sound patterns so that the extraneous or environmental noises are not intrusive or cannot be heard consciously. Also, a timing device may be employed in conjunction with the means for producing the sleep inducing sounds at the location of the individual to determine the number of hours the individual desires to sleep, so as to terminate production of the sleep inducing sound patterns at the end of the desired period.

One examples of a portion of apparatus for producing sleep inducing sounds in accordance with the present invention is illustrated in block diagram form in FIG. 1. Referring to FIG. 1, there is shown a basic repetitive sound generator **10**, which may be any conventional sound reproducing device such as a magnetic tape reproducer or play-back device for producing an audio frequency output responsive to a magnetic tape or cassette recording of a basic repetitive sound, such as the sound of ocean surf, or any of the other six previously mentioned basic, familiar, repetitive sounds. Alternatively, the basic sounds can be produced electronically. The output signals from the repetitive sound generator **10** are applied to one input of a conventional mixer stage **12**. The modifying signal generating means are generally indicated at **14** in FIG. **1**, and comprises a first modifying frequency signal generator **16** capable of producing output signals at any frequency within the range .8 cps to 1.8 cps, and a second modifying frequency signal generator **18** capable of producing output signals at any frequency within the range 5.5 cps to 6.75 cps. Both of the modifying frequency signal generators **16** and **18** are continuously swept back-and-forth by a frequency varying device **20** which may be, for example, a motor driven mechanism mechanically coupled to capacitive or inductive elements of the generators **16** and **18** to vary the frequencies thereof within the stated ranges. The outputs from the modifying frequency signal generators **16** and **18** are coupled to a signal mixer **22** where the outputs are mixed and are then supplied to isolation and splitter circuitry, indicated generally at **24**, which apply the mixed frequency signals from the output of the mixer **22** through output lead **26*a*** to the mixer **12** to modify the signals from the sound generator **10**, or to apply the mixed modifying frequency signals through any of the other output leads **26*b***, **26*c***, **26*d***, **26*e*** and **26*f*** to mixers like the mixer **12** associated with each of the other basic repetitive sound generators similar to sound generator **10** producing the other basic familiar sound patterns mentioned above. The output from the mixer **12** associated with the sound generator **10**, or from any of the other mixers associated with any of the other basic sound generators, is applied to a conventional amplifier stage **28** whose output drives a speaker **44** or other sound transducer to produce the sleep inducing sound signals. A conventional level adjustment control **46** may be associated with the amplifier **28** to permit variation of the volume level by the listener, and an automatic turn-off timing device **48** may be provided, to perform the functions described in the immediately preceding paragraph.

An alternate circuit arrangement for generating the sleep inducing sounds is illustrated in block diagram form in FIG. **2**, with some associated waveforms, wherein first and second pulse signal generators **16** and **18** are activated by a frequency varying device **20** to continuously sweep the pulse frequency of the output from signal generator **16** between 0.8 and 1.8 cps and to continuously sweep the pulse frequency of the output from signal generator **18** between 5.5 cps and 6.75 cps. The outputs from the two signal generators **16** and **18** are applied to flip-flop circuits **30** and **32** to trigger them and produce approximately squarewave outputs which are rounded off by the selection of component values. Their outputs are applied to gating circuits **34** and **36**, to which the output from a white noise generator **38** is also applied. The "white noise" produced by the generator **38** may be described as a multi-frequency sound or a sound involving all frequencies needed to mix with the pleasing basic repetitive sound such that its presence is evident when mixed. The outputs from the gates **34** and **36**, are applied through uni-directional diodes or similar devices **40**, **42** to the inputs to mixers **12** associated with the basic repetitive sound generators, such as the "ocean surf" sound generator **10**, for mixing the composite signal with the output from the basic sound generators to produce the composite sleep inducing output signal.

It will be apparent that apparatus such as that indicated in block diagram form in FIGS. **1** and **2** may be provided in the bedroom of the individual desiring to have sleep induced, or may be employed as a central sound producing system to produce electrical signal outputs which are coupled to transducers or speakers in the bedrooms of motels, hotels, apartment buildings and the like, or may be employed as the sound producing device to generate the sleep inducing signals which are then recorded on magnetic tape, cassettes, or similar sound recording records, by a conventional recording device, indicated at **50** in FIG. **1**, which may be used in the conventional manner in sound play-back devices owned by the individuals.

It is not established whether the modifying signals modulate the basic sound or mix with the basic sound, or both. Hence the term "modifying" has been used herein to describe the action which occurs.

What is claimed is:

1. A method of producing signal patterns for inducing sleep in a human being by audible sounds, comprising the steps of generating an audio signal representing a familiar, repetitive, pleasing sound, generating a first modifying signal having a varying frequency and continuously sweeping said first modifying signal back-and-forth through a frequency range from about 0.8 cycles per second to 1.8 cycles per second, generating a second modifying signal having a varying frequency and continuously sweeping said second modifying signal back-and-forth through a frequency range from about 5.5 cycles per second to 6.75 cycles per second, and modifying the audio signal with said first and second swept modifying signals to produce a composite output signal representative of the modified audio signal for production of an audible sound output therefrom.

2. A method of producing sounds for inducing sleep in a human being, comprising the steps of generating an

audio signal representing a familiar, repetitive, pleasing sound, generating a first modifying signal having a varying frequency and continuously sweeping said first modifying signal back-and-forth through a frequency range from about 0.8 cycles per second to 1.8 cycles per second, generating a second modifying signal having a varying frequency and continuously sweeping said second modifying signal back-and-forth through a frequency range from about 5.5 cycles per second to 6.75 cycles per second, modifying the audio signal with said first and second swept modifying signals to produce a composite output signal; and producing an audible sound output from said composite signal for inducing sleep in an individual.

3. A method of producing sounds for inducing sleep as defined in claim **2**, including the further step of setting a timing device to automatically turn off the output signal after a pre-determined time.

4. A method of producing sounds for inducing sleep as defined in claim **3**, comprising the further step of setting the audible level of said sound output at a level to mask the ambient noise level of the environment.

5. A method of producing signal patterns for inducing sleep in a human being, by audible sounds, comprising the steps of generating a selected audio signal chosen from a group of pre-determined audio signals, generating a first modifying signal having a varying frequency and continuously sweeping said first modifying signal back-and-forth through a frequency range from about 0.8 to 1.8 cycles per second resembling delta wave patterns occurring in a human EEG sleep pattern signal, generating a second modifying signal having a varying frequency and continuously sweeping said second modifying signal back-and-forth through a frequency range from about 5.5 to 6.75 cycles per second resembling theta wave patterns occurring in a human EEG sleep pattern signal; and modifying said selected audio signal with said first and second swept modifying signals to produce a composite output signal representation of the modified audio signal for production of an audible sound output therefrom for inducing sleep in a human being.

6. A method of producing sounds for inducing sleep in a human being, comprising the steps of generating a selected audio signal chosen from a group of predetermined audio signals, generating a first modifying signal having a varying frequency and continuously sweeping said first modifying signal back-and-forth through a frequency range from about 0.8 to 1.8 cycles per second resembling delta wave patterns occurring in a human EEG sleep pattern signal, generating a second modifying signal having a varying frequency and continuously sweeping said second modifying signal back-and-forth through a frequency range from about 5.5 to 6.75 cycles per second resembling theta wave patterns occurring in a human EEG sleep pattern signal, modifying said selected audio signal with said first and second swept modifying signals to produce a composite output signal, and producing an audible sound output from said composite output signal for inducing sleep in a human being.

7. A method of inducing sleep as defined in claim **6**, comprising the further step of setting the audible level of said audible sound output at a level to mask the ambient noise level of the environment.

8. A method of producing sounds for inducing sleep in a human being, comprising the steps of generating a composite signal representation of a familiar, repetitive, pleasing audio signal, producing a first modifying signal and continuously sweeping it back-and-forth through a frequency range from about 0.8 cycles per second 1.8 cycles per second, modulating said audio signal with said first modifying signal, producing a second modifying signal and continuously sweeping it back-and-forth through a frequency range from about 5.5 cycles per second to 6.75 cycles per second, modulating said audio signal with said second modifying signal thereby producing a composite signal representation from said audio signal and said modifying signals, and producing an audible sound output from said composite signal representation for inducing sleep in an individual.

9. A method of producing sounds for inducing sleep as defined in claim **8**, comprising the further step of setting the audible level of said audible sound output at a level to mask the ambient noise level of the environment.

10. Apparatus for producing signal patterns for inducing sleep in a human being by audible sounds, comprising audio signal generating means for generating an audio signal representing a familiar, repetitive, pleasing sound, first and second modifying signal generators, means for varying the frequency of the signals produced by said modifying signal generators for generating a first signal having a varying frequency range from about 0.8 to 1.8 cycles per second and for concurrently generating a second modifying signal having a varying frequency which is continuously swept back-and-forth through a frequency range from about 5.5 to 6.75 cycles per second; and means for modifying the audio signal with said first and second modifying signals to produce a composite output signal representation of the modified audio signal for production of an audible sound output therefrom.

11. Apparatus as defined in claim **10**, including recording means for recording said composite output signal representation on a recording medium.

12. Apparatus as defined in claim **10**, including recording means for recording said composite output signal representation on magnetic tape recording medium.

13. A method of producing signal patterns for inducing sleep in a human being by audible sounds, comprising the steps of generating an audio signal representing a familiar, repetitive, pleasing sound, generating a first modifying signal having a varying frequency and continuously sweeping said first modifying signal back-and-forth through the delta frequency range, generating a second modifying signal having a varying frequency and continuously sweeping said second modifying signal back-and-forth through the theta frequency range and modifying the audio signal with said first and second signals to produce a composite output signal representative of the combined audio signal for production of an audible sound output therefrom.

* * * * *

UNITED STATES PATENT OFFICE

CERTIFICATE OF CORRECTION

Patent No. 3,712,292 Dated January 23, 1973

Inventor(s) John E. Zentmeyer, Jr.

It is certified that error appears in the above-identified patent and that said Letters Patent are hereby corrected as shown below:

Column 2, line 12 "generated" should read --generate--;

and,

Column 2, line 14 "FIG. 3" should read --FIG. 2--.

Signed and sealed this 29th day of May 1973.

(SEAL)
Attest:

EDWARD M.FLETCHER,JR.
Attesting Officer

ROBERT GOTTSCHALK
Commissioner of Patents