US00D577990S

(12) United States Design Patent

Andre et al.

(10) Patent No.: US D577,990 S

(45) Date of Patent: ** Oct. 7, 2008

(54) **CLASP**

(75) Inventors: **Bartley K. Andre**, Menlo Park, CA (US); **Daniel J. Coster**, San Francisco, CA (US); **Daniele De Iuliis**, San Francisco, CA (US); **Richard P. Howarth**, San Francisco, CA (US); **Jonathan P. Ive**, San Francisco, CA (US); **Steve Jobs**, Palo Alto, CA (US); **Duncan Robert Kerr**, San Francisco, CA (US); **Shin Nishibori**, San Francisco, CA (US); **Matthew Dean Rohrbach**, San Francisco, CA (US); **Douglas B. Satzger**, Menlo Park, CA (US); **Calvin Q. Seid**, deceased, late of Palo Alto CA (US); by **Vincent Keane Seid**, legal representative, Los Gatos, CA (US); **Christopher J. Stringer**, Portola Valley, CA (US); **Eugene Antony Whang**, San Francisco, CA (US); **Rico Zorkendorfer**, San Francisco, CA (US)

(73) Assignee: **Apple Inc.**, Cupertino, CA (US)

(**) Term: **14 Years**

(21) Appl. No.: **29/257,103**

(22) Filed: **Mar. 28, 2006**

Related U.S. Application Data

(62) Division of application No. 29/237,091, filed on Aug. 24, 2005, now Pat. No. Des. 534,065.

(51) **LOC (8) Cl.** **08-08**

(52) **U.S. Cl.** **D8/395**; D8/396; D14/205; D14/299

(58) **Field of Classification Search** D8/356, D8/371, 394–396; D19/65; D24/128; 24/570; 248/74.2, 215, 227.1, 49, 300, 301, 316.7, 248/51, 489

See application file for complete search history.

(56) **References Cited**

U.S. PATENT DOCUMENTS

3,056,309 A * 10/1962 Horste 474/218

(Continued)

FOREIGN PATENT DOCUMENTS

JP D1085073 9/2000

(Continued)

OTHER PUBLICATIONS

U.S. Appl. No. 29/212,168 entitled "Device Harness" filed Aug. 26, 2004.

(Continued)

Primary Examiner—Robert M. Spear
Assistant Examiner—John Windmuller
(74) *Attorney, Agent, or Firm*—Sterne, Kessler, Goldstein & Fox P.L.L.C.

(57) **CLAIM**

We claim the ornamental design for a clasp, substantially as shown and described.

DESCRIPTION

This application is also related to: (i) U.S. Design patent application Ser. No. 29/237,086, filed Aug. 24, 2005 and entitled "Lanyard", which is hereby incorporated herein by reference, and (ii) U.S. Design patent application Ser. No. 29/237,287, filed Aug. 24, 2005 and entitled "Electronic Device Holder", which is hereby incorporated herein by reference.

FIG. **1** is a perspective view of a clasp in accordance with the present design.

FIG. **2** is a top view for the clasp.

FIG. **3** is a bottom view for the clasp.

FIG. **4** is a front view for the clasp.

FIG. **5** is a rear view for the clasp.

FIG. **6** is a right side view for the clasp.

FIG. **7** is a left side view for the clasp; and,

FIG. **8** is a top perspective view of a pair of clasps used in a lanyard.

The broken lines of the lanyard are included for the purpose of illustrating environmental structure only and form no part of the claimed design.

1 Claim, 2 Drawing Sheets

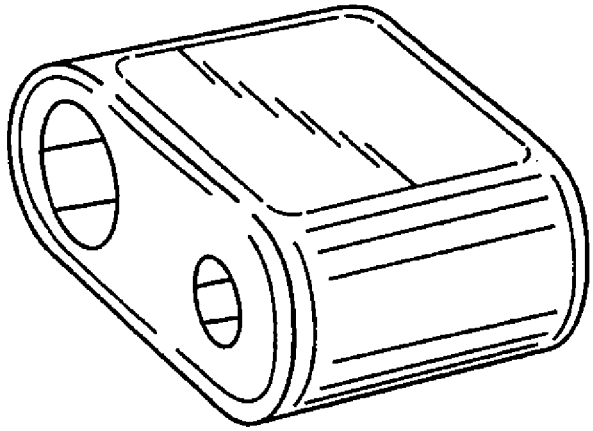

U.S. PATENT DOCUMENTS

3,532,837	A	10/1970	Dyar et al.
D256,772	S	9/1980	Helgren
4,406,042	A	9/1983	McPhee
4,649,570	A	3/1987	Terbrack et al.
D316,550	S	4/1991	Sogabe
D318,473	S	7/1991	Miyashita et al.
D318,670	S	7/1991	Tanguchi
D318,865	S	8/1991	Ichikawa
D326,655	S	6/1992	Iribe
D334,043	S	3/1993	Taniguchi et al.
5,194,987	A	3/1993	Moore et al.
D338,037	S	8/1993	Miller et al.
D342,449	S	12/1993	Mattheis
D372,420	S	8/1996	Mendez
5,640,459	A	6/1997	Hedeen
5,666,702	A	9/1997	Ming-Chieh
5,708,706	A	1/1998	Hughes et al.
D437,485	S	2/2001	Hicks et al.
6,392,882	B1	5/2002	Chen et al.
D460,432	S	7/2002	Brown
D462,523	S	9/2002	Kalbach
D462,689	S	9/2002	Moran
D467,416	S	12/2002	Kalbach
6,517,031	B2	2/2003	Uchiyama
6,550,108	B2	4/2003	Pratl
D475,850	S	6/2003	Andre et al.
D476,149	S	6/2003	Andre et al.
D481,377	S	10/2003	Eguchi
6,675,446	B2	1/2004	Buettell
6,691,382	B1	2/2004	Su
6,711,785	B1	3/2004	Hicks et al.
D494,450	S	8/2004	Schultz et al.
6,776,317	B1	8/2004	Parker
D500,302	S	12/2004	Deguchi
D500,485	S	1/2005	Deguchi
6,871,732	B2	3/2005	Flint et al.
D507,261	S	7/2005	Griffin
D509,819	S	9/2005	Yang
D511,157	S	11/2005	Johnson
D514,552	S	2/2006	Lee et al.
D515,545	S	2/2006	Griffin
D519,731	S	5/2006	Andre et al.
D519,993	S	5/2006	Montgomery et al.
7,099,467	B1	8/2006	Rohrbach
D527,723	S	9/2006	Andre et al.
D529,044	S	9/2006	Andre et al.
D530,340	S	10/2006	Andre et al.
D530,342	S	10/2006	Lee et al.
D534,065	S	12/2006	Andre et al.
7,148,418	B2	12/2006	Ku et al.
D534,921	S	1/2007	Andre et al.
D538,820	S	3/2007	Andre et al.

FOREIGN PATENT DOCUMENTS

JP	D1085080	9/2000
JP	D1089527	10/2000
JP	D1089528	10/2000
JP	D1089529	10/2000
JP	D1105429	4/2001
JP	D1106452	4/2001
JP	D1121650	9/2001
JP	D1123108	10/2001
JP	D1129386	12/2001
JP	D1129387	12/2001
JP	D1106151	8/2002
JP	D1089530	10/2002
JP	D1131037	10/2002
JP	D1154927	10/2002
JP	D1174623	6/2003
JP	D1174710	6/2003
JP	D1185408	9/2003
JP	D1188267	10/2003
JP	D1191223	12/2003
JP	D1193941	1/2004
JP	D1211811	7/2004
JP	D1211812	7/2004

OTHER PUBLICATIONS

U.S. Appl. No. 29/237,086 entitled "Lanyard" filed Aug. 24, 2005.
U.S. Appl. No. 29/237,287 entitled "Electronic Device Holder" filed Aug. 24, 2005.
U.S. Appl. No. 29/237,091 entitled "Clasp", filed Aug. 24, 2005.
U.S. Appl. No. 29/237,691 entitled "Lanyard" filed Sep. 2, 2005.
U.S. Appl. No. 29/220,038 entitled "Media Device" filed Dec. 23, 2004.
U.S. Appl. No. 29/220,035 entitled "Electronic Device" filed Dec. 23, 2004.
U.S. Appl. No. 29/220,120 entitled "Electronic Device" filed Dec. 23, 2004.
"ASCII" weekly publication issued on Jul. 29, 2003, No. 450, Design of USB Memory Audio Player (JPO publicly known Design No. HA15013509) received by the National Center for Industrial Property Information on Jul. 15, 2003.
"Crucial Gizmo! Hi-Speed 512MB USB Flash Drive", Xtreme Resources:: Your Xtreme Hardware Review and News Zone!, www.xtremeresources.com, downloaded Nov. 23, 2005.
"USB Flash Drive—Style DE (Best Seller)", www.memorysuppliers.com/usbfldrstde.html, downloaded Nov. 23, 2005.
"Iomega Mini USB Drives", www.iomega.com, downloaded Nov. 23, 2005.
"Verbatim USB Drive Review: Store 'n' Go 512MB", www.audioholics.com, downloaded Nov. 23, 2005.
Gigabyte GO-U0128B 128MB USB Hard Drive Review—Pcstats.com, www.pcstats.com, downloaded Nov. 23, 2005.
"Lexar Media JumpDrive Classic USB Flash Drive with Lanyards, 128MB, 3 Pack", www.compusa.com, downloaded Nov. 23, 2005.
"USB Drive, USB Pen Drive, USB Flash Drive, USB Thumb Drive, Flash Drives, 512MB, 1GB, 2GB, 4GB, 8GB", www.supermediastore.com/usb-flash-drive-usb-flash-drives.html, downloaded Nov. 23, 2005.
"USB Drive, USB Pen Drive, USB Flash Drive, USB Thumb Drive, Flash Drives, 512MB, 1GB, 2GB, 4GB, 8GB", www.supermediastore.com/usb-flash-drive-usb-flash-drives-pen-drives.html, downloaded Nov. 23, 2005.
"USB Drive, USB Pen Drive, USB Flash Drive, USB Thumb Drive, Flash Drives, 512MB, 1GB, 2GB, 4GB, 8GB", www.supermediastore.com/usb-flash-drive-usb-flash-drives-pen-drives.html ..., downloaded Nov. 23, 2005.
"USB Flash Drives, USB Pen Drives, Portable Memory, Shop for USB Flash Drives" www.flash-memory-store.com..., downloaded Nov. 23, 2005.
"Sony Micro Vault 512MB USB 2.0 Flash Drive (00027242645561): Overview", www.dealtime.com..., downloaded Nov. 23, 2005.
"Philips KEY006 128MB MP3/WMA player/Thumb Drive with Neck Strap Remote", www.amazon.com..., downloaded Nov. 22, 2005.
Joybee 125 MP3 Player, 128MB, Orange (DA125-128MB-Orange), www.amazon.com..., downloaded Nov. 22, 2005.
"NEO PIX Live 256 Mb MP3 USB 2.0 USB key", www.pixmania.co.uk... downloaded Nov. 22, 2005.
"iRiver 1 GBMP3 Player with FM Tuner", www.circuitcity.com..., downloaded Nov. 22, 2005.
"Sony Network Walkman Digital Music Player", www.circuitcity.com ..., downloaded Nov. 22, 2005.
"Samsung 1GB USB Direct-Insert MP3 Player", www.circuitcity.com..., downloaded Nov. 22, 2005.
"Samsung 512MB Portable Digital Audio Player", www.circuitcity.com..., downloaded Nov. 22, 2005.
"iRiver 512MB MP3 Jukebox with Color Display", www.circuitcity.com..., downloaded Nov. 22, 2005.
"Samsung 512MB USB Direct-Insert MP3 Player", www.circuitcity.com..., downloaded Nov. 22, 2005.

"Creative Zen Nano 512MB MP3 Player (White)", www.circuitcity.com..., downloaded Nov. 22, 2005.
"SanDisk 512MB MP3 Player", www.circuitcity.com..., downloaded Nov. 22, 2005.
"YoYo-128MB", www.usb-mp3player.co.uk, downloaded Nov. 22, 2005.
"Aigo BY06-128MB", www.usb-mp3players.co.uk, downloaded Nov. 22, 2005.
"Sigmatel USB Mp3 Player", www.intomusic.co.uk/scipts/usb-mp3-wma-player.asp, downloaded Nov. 22, 2005.
"Transcend 256MB T. Sonic 610 USB MP3 Player", www.supermediastore.com..., downloaded Nov. 22, 2005.
"Apacer Audio Steno AS820 USB 512MB Flash Drive MP3 Player FM Radio Line-In MP3 Conversion Voice", www.supermidastore.com..., downloaded Nov. 22, 2005.
"Ennyah Digi Sound 701 Aluminum Case MP3 Player 212MB Silver", www.supermediastore.com..., downloaded Nov. 22, 2005.
"Artwizz HangPhones Earphones", http://shop.ipodworld.co.uk..., downloaded Jun. 27, 2005.
"Rio eStore", www.riohome.net/shop/bin... downloaded Jun. 15, 2005.
"PN10 512MB", www.iriveramerica.com..., downloaded Aug. 23, 2005.
"iDiddy", www.iddidy.com downloaded Aug. 24, 2005.
"Ice Bud: Lanyard Headphones for iPod® nano and shuffle", www.macally.com/spec.ipod/icebud.html, downloaded Nov. 10, 2005.

* cited by examiner

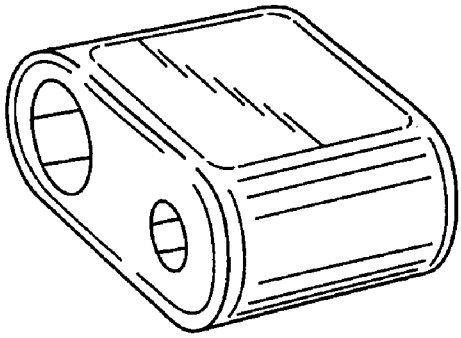

FIG. 1

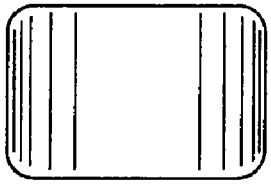

FIG. 2

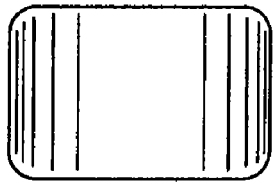

FIG. 3

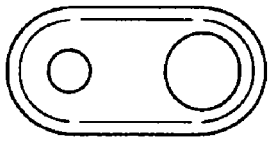

FIG. 4

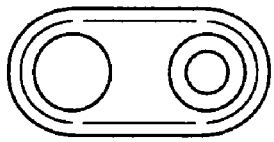

FIG. 5

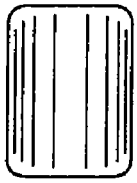

FIG. 6

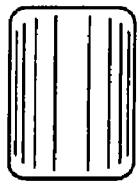

FIG. 7

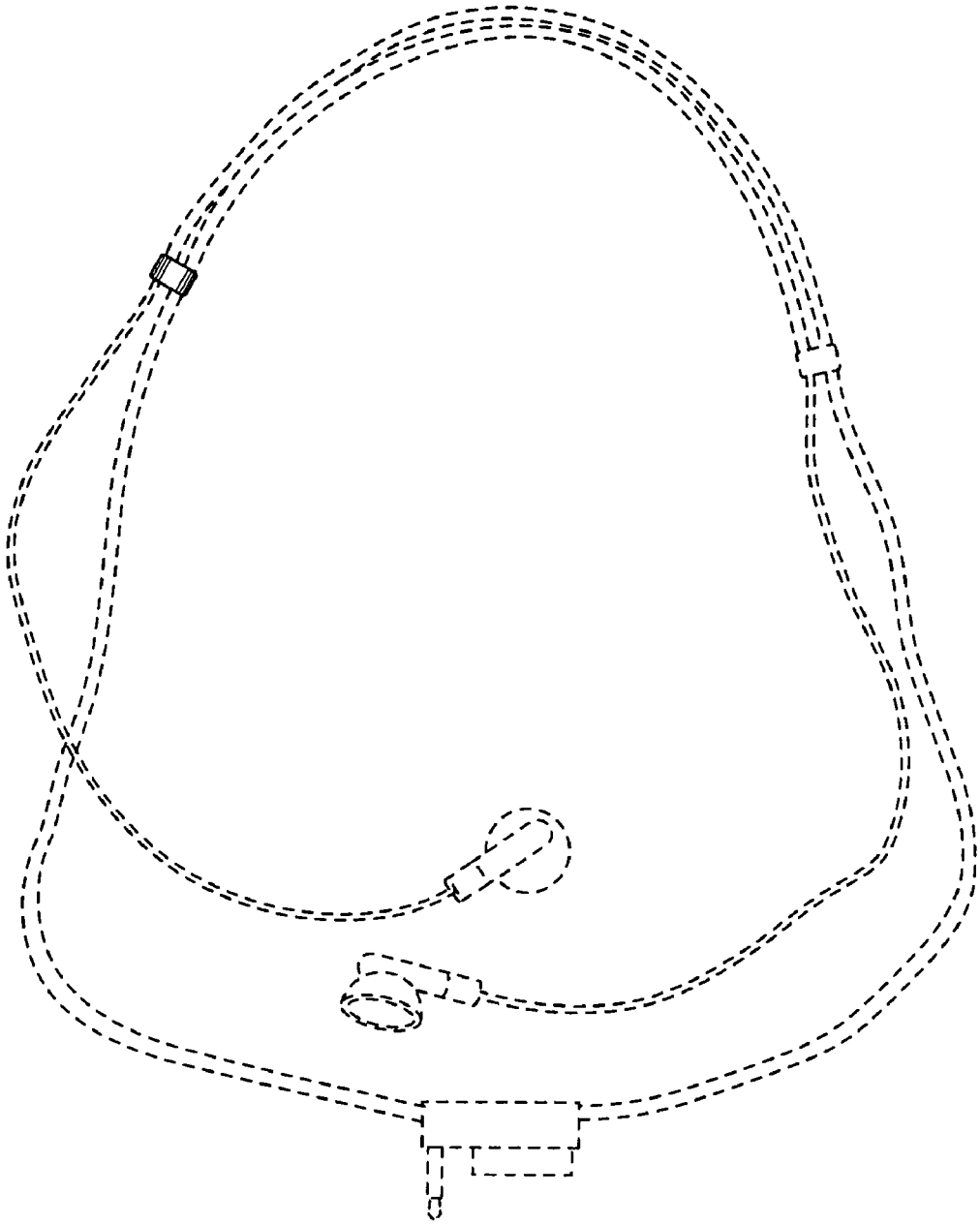

FIG. 8