United States Patent

[11] 3,576,185

[72] Inventors Hansrichard Schulz
Villingen Schwarzwald;
Oskar Meseck, Singen Hohentwich,
Germany

[21] Appl. No. 741,154
[22] Filed June 19, 1968
[45] Patented Apr. 27, 1971
[73] Assignee Saba Schwarzwalder Apparate-Bau-Anstalf
August Schiver Sohne GmbH
Villingen Schwarzwald, Germany

[54] **SLEEP-INDUCING METHOD AND ARRANGEMENT USING MODULATED SOUND AND LIGHT**

19 Claims, 4 Drawing Figs.

[52] U.S. Cl. 128/1, 307/293, 331/108, 331/137
[51] Int. Cl. A61n 1/34
[50] Field of Search ..... 128/1, 1.03 (Digest), 2; 331/108, 108.4, 137; 332/31 , 66, 50; 307/293

[56] **References Cited**

UNITED STATES PATENTS

2,304,095	12/1942	Hull	128/1
2,425,538	8/1947	Johnson	128/1
3,014,477	12/1961	Carlin	128/1
3,183,453	5/1965	Amlinger	331/108
3,213,851	10/1965	Currea	128/1
3,316,502	4/1967	Karras	331/108
3,436,607	4/1969	Yagusic	307/293X
3,440,450	4/1969	Broekhuysen	307/293

Primary Examiner—William E. Kamm
Attorney—Michael S. Striker

ABSTRACT: A tone or a blue light are modulated slowly between a perceivable maximum and a perceivable minimum with a perceivable period. Both the light and the tone are switched in after a time delay past the energization of the carrier and modulating signal generators used in the generation of the modulated light and tone, so that no transient effects are visible to the patient. The switch-out process is similarly effected in gradual stages to reduce transient effects.

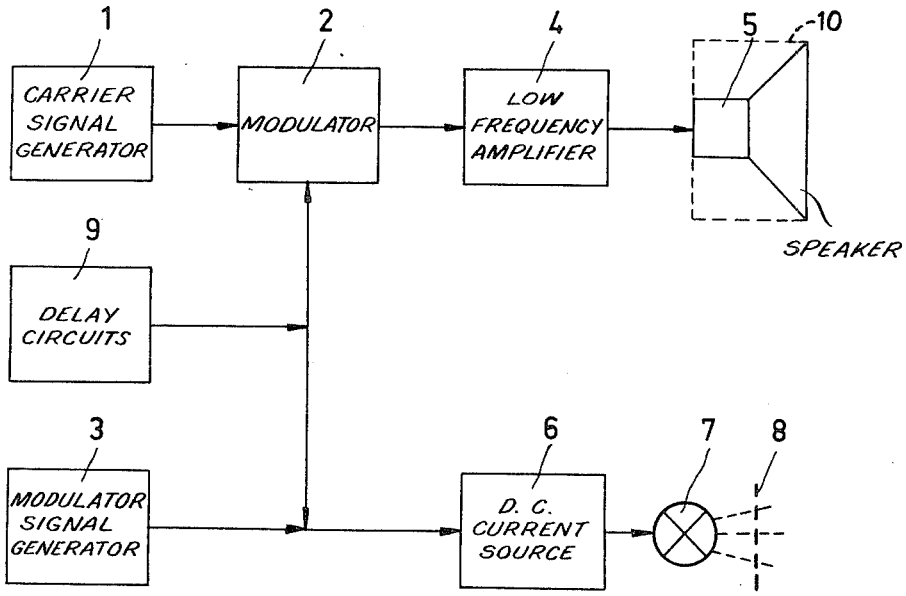

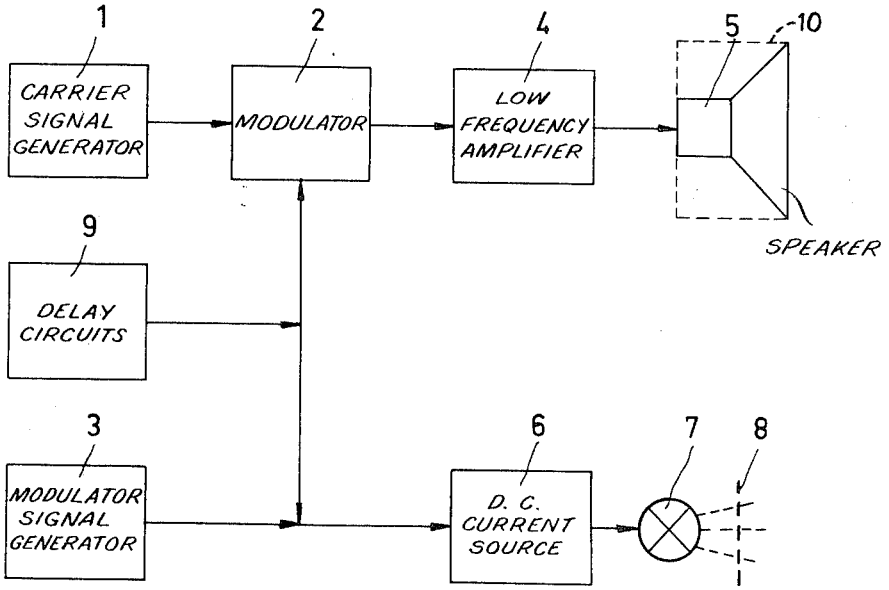

Fig. 1

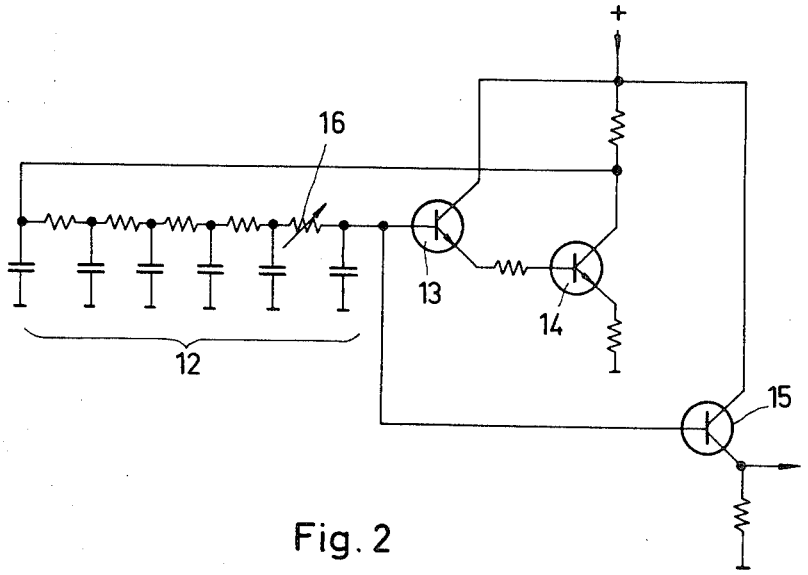

Fig. 2

Inventors:
HANS RICHARD SCHULZ
OSKAR MESECK

By Michael S. Striker
Attorney

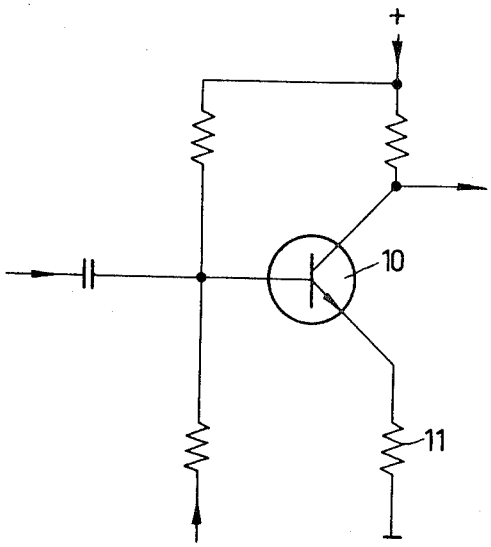

Fig. 3

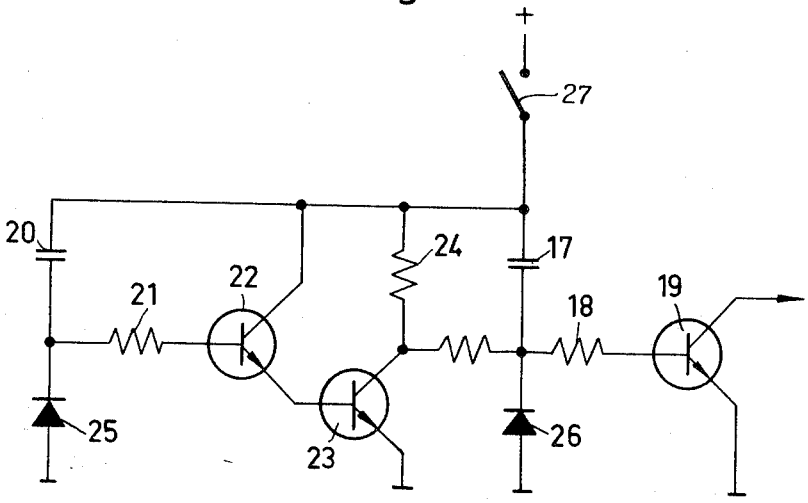

Fig. 4

Inventors:
HANSRICHARD SCHULZ
OSKAR MESECIC

By: Michael S. Striker
Attorney

SLEEP-INDUCING METHOD AND ARRANGEMENT USING MODULATED SOUND AND LIGHT

BACKGROUND OF THE INVENTION

It is well known that many people have difficulty in falling asleep. A well-known method for inducing sleep is the use of chemical substances in the form of sleeping tablets or tranquilizers. However these medicines often have both physical and psychological side effects. For this reason it is advantageous to induce sleep by physical methods having no harmful side effects.

One such method consists of applying rectangular pulses to the head of the patient by means of electrodes. This method is obviously cumbersome because of the need for applying the electrodes.

Furthermore, it has been attempted to exert a hypnotic influence on the patient by means of a light source which is alternately dimmed and brightened by mechanical means. It was also suggested that it would be possible simultaneously and in the same rhythm to imitate the sound of breathing in and breathing out. It has also been suggested that different lamps may be connected and disconnected sequentially by mechanical means. Further, it has also been suggested that in addition to a mechanically controlled light source, a source of a tone, for example a tape recorder, could be used which would produce a hypnotizing text.

The effectiveness of this type of sleep-inducing method is debatable. Furthermore, the conventional apparatuses have the definite disadvantage that side effects, namely noise are generated by the switching mechanism, tend to reduce the sleep-inducing effect considerably.

SUMMARY OF THE INVENTION

This invention is a sleep-inducing method and the apparatus for carrying out said method. The method consists of the steps of starting, without overshoot, generation of at least one perceivable signal, amplitude modulated between a perceivable minimum and a perceivable maximum with a perceivable period. It further comprises the step of continuing the generation of said signal for a determined length of time and thereafter gradually terminating said signal. The signal may either be a tone or a light or both. If both are used, they may be modulated synchronously, so that they reach their maxima and their minima simultaneously, or alternatively, a phase shift may exist between the two modulations.

The effect of the method according to this invention probably results from the fact that the rhythm of breathing of the patient is pulled into a calming and sleep-inducing tempo by acoustical and optical means.

The novel features which are considered as characteristic for the invention are set froth in particular in the appended claims. The invention itself, however, both as to its construction and its method of operation, together with additional objects and advantages thereof, will be best understood from the following description of specific embodiments when read in connection with the accompanying drawing.

BRIEF DESCRIPTION OF THE DRAWING

FIG. 1 is a diagram of the sleep-inducing arrangement;

FIG. 2 is a circuit diagram of the carrier and modulation signal generators;

FIG. 3 is a circuit diagram of the modulator; and

FIG. 4 is a circuit diagram of the electronic time delay switch.

DESCRIPTION OF THE PREFERRED EMBODIMENTS

A preferred embodiment of the present invention will now be described with reference to the drawing. Referring first to FIG. 1, reference numeral 1 denotes carrier signal-generating means adapted to generate a pure sinusoidal signal whose frequency may be adjusted between 40 and 80 Hz. This carrier signal is modulated in the modulator stage 2 by means of the

sinusoidal modulation signal generated in modulation signal generator 3. The period of the modulation signal is adjustable between 3 and 12 seconds. The percentage modulator can be adjusted between 0 and 90 percent in the modulation stage 2. The amplitude modulated carrier signal having a range of maximum to minimum amplitude ratio extending, for example, between 10:1 and 2:1, may be amplified by means of a low-distortion low frequency amplifier 4 and then fed to speaker means, preferably a woofer, 5, which is preferably mounted in an acoustically absorbent speaker cabinet for optimal generation of low frequency tones. Low frequency amplifier 4 has, for example, a distortion factor of less than 0.5 percent to a 15 watt output.

As shown in the block diagram of FIG. 1, the modulation signal generator supplies a signal which is applied not only for modulating of the carrier frequency signal, but which also serves to modulate a direct current source 6 which supplies the energy for a light source 7. The direct current source 6 may for example comprise a DC amplifier whose output is connected to the lamp 7. This causes the brightness of the lamp to vary in synchronism with the modulation signal. Phase shift may be introduced between the brightness variation and the tone modulation. A filter 8 may be supplied for extracting a particular desired color from the light.

FIGS. 2 through 4 show the construction of the individual elements constituting the sleep-inducing arrangement in detail.

FIG. 2 shows the circuit for the carrier signal generator 1, which may also be used for the modulation signal generator 3.

As shown in FIG. 2, the signal generators used in this invention may be of the phase shift type. They may for example consist of a two-stage amplifier having an input transitor 13 and an output transistor 14. A phase shift circuit, consisting of at least three RC integrator stages is connected between the output of the transistor 14 and the base of the transistor 13. In the particular example shown in FIG. 2 the phase shift circuit is designated 12 and consists of six of such RC circuits. The operating points of the transistors are so adjusted that amplitude limiting may be achieved by overdriving output transistor 14 below the bend in its collector current-voltage characteristic. This type of amplitude limiting operates much more rapidly than, for example the type of limiting in Wien bridge generators where temperature dependent resistance elements are used.

A purely sinusoidal signal may be derived at the output of the phase shift circuit 12, that is at the base of input transistor 13, and may be furnished to the remainder of the circuit by means of an impedance changing circuit, here an emitter follower stage 15.

The last resistance 16 of the phase shift circuit 12 may be adjustable, so that the frequency of the signal generator may be changed.

Exactly the same circuit may be used for both the carrier signal generator and the modulation signal generator. Of course the values of the resistances and the capacitances in the phase shift circuit must correspond to the desired frequency.

FIG. 3 is the circuit diagram of the modulator 2. This is essentially a single transistor amplifier stage. The important characteristics of this stage are that the feedback is independent of frequency and that the emitter resistor 11 is approximately equal to $R=1/Sa$, where Sa is the slope of the collector current-base voltage characteristic of transistor 10 at the operating point.

It is essential for the success of the method according to this invention that both the optical and the acoustical signals are switched in gradually, that is without transient light flashes or switching noise and, also, are terminated in a corresponding fashion after continuing for a predetermined time length.

A switching circuit for accomplishing this purpose is shown in FIG. 4. First it serves to delay the generation of the perceivable signals for, for example 8 seconds, thus preventing transient overvoltages resulting from the switch-in of the carri-

er and modulation signal generators form reaching the output. Furthermore it allows the signals to be discontinued at a predetermined time and so gradually that the switch-out period may for example extend over several minutes. Both signals are here to be terminated without side noise or flashing light effects.

Referring now to FIG. 4, which shows the circuitry contained in block 9 of FIG. 1, it is seen that the circuit to accomplish the above-mentioned purposes comprises a delay transistor 19 having an emitter connected to ground. The collector of the transistor 19 is connected to the input of modulator 2 and also to the DC current source 6. The base of delay transistor 19 is connected over a resistor 18 and a condenser 17 to the power source for the apparatus via a switch 27. The operation of the modulator stage 2 and the DC amplifier 6 is so chosen, that these stages are activated as long as transistor 19 is blocked, while they are blocked when transistor 19 becomes conductive. Thus the following operation of the circuit of FIG. 4 results: When the equipment is switched in by means of switch 27, condenser 17 charges over the base-emitter circuit of transistor 19 and over resistance 18. This charging current maintains the transistor conductive until such time that as the condenser has reached a potential adapted to block transistor 19. Thus the delay between generation of perceivable outputs of the equipment, and the original switching in, is dependent on the time constant of the RC circuit consisting of capacitor 17 and resistance 18.

When transistor 19 is conductive, the operating points of both the modulator stage 2 and the DC amplifier 6 are such that both of these circuits are blocked, thus preventing the generation of the perceivable signal. However when transistor 19 becomes blocked, the operating points of the input stages of modulator 2 and of the DC amplifier 6 assume their normal operating points.

Of course changing of the components, and particularly of resistance 18 can change the delay time considerably.

The circuit of FIG. 4 also serves for the gradual termination of the perceivable signals. This is accomplished as follows: When the power source is connected to the sleep-inducing arrangement by switch 27, this also initiates the charging of condenser 20. This condenser is connected on the one hand to the positive terminal of the power source, and on the other hand by means of a resistance 21 and the base-emitter circuits of first and second switch-out transistors 22 and 23 to ground. As long as a large charging current exists, the collector current of second switch-out transistor 23 causes a voltage drop in resistance 24 and the collector voltage of transistor 23 is very low, namely less than 0.5 volts. This causes transistor 19 to remain blocked. Thus when transistor 23 is conducive, transistor 19 remains blocked even after the end of the switch in period and normal functioning of the apparatus exists.

However, as the charging current of the condenser, and thus the collector current of the transistor 23, decrease, the increasing collector voltage of transistor 23 results in a shifting of the operating point of delay transistor 19. The latter thus slowly moves from the blocked region to the conductive region. This, in turn, as described above, causes the operating point of the modulator 2 and the DC amplifier 6 to move in the direction of cutoff, thus diminishing the intensity of the signals until they are finally imperceivable.

The diodes 25 and 26 in FIG. 4 serve solely as a protection for the transistors.

A further improvement of the method according to this invention may be achieved by making the acoustic signals pure sinusoids having a frequency between 40 and 80 Hz. or, more particularly 55 Hz. and causing the signals to be emitted by at least two separate speakers simultaneously with approximately equal volume. The distance between the speakers should be at least 1 meter.

The effectiveness of the sleep-inducing effect is increased considerably when the frequency of the sine tones emitted by both speakers differ by approximately 0.5 to 2 Hz. This causes additional beat frequencies to appear. This method is particularly effective when the modulation periods of the two acoustic signals are slightly different. This improvement may probably be traced to the fact that the acoustic center of the emitted sound moves from one of these signal sources to the other during the treatment period because of the differences in modulation frequency.

While the invention has been illustrated and described as embodied in particular circuit arrangements, it is not intended to be limited to the details shown, since various modifications and structural and circuit changes may be made without departing in any way from the spirit of the present invention.

Without further analysis, the foregoing will so fully reveal the gist of the present invention that others can by applying current knowledge readily adapt it for various applications without omitting features that, from the standpoint of prior art, fairly constitute essential characteristics of the generic or specific aspects of this invention and, therefore, such adaptations should and are intended to be comprehended within the meaning and range of equivalence of the following claims.

What is claimed as new and desired to be protected by Letters Patent is set forth in the appended claims.

We claim:

1. Method for inducing sleep in a subject, comprising, in combination, the steps of starting at a first and a second location the generation of perceivable sound signals in the range of 40 to 80 Hz. free of overtones and amplitude modulated between perceivable minimum and a perceivable maximum with a predetermined perceivable constant period within a perceivable distance of said subject, said sound signals at said first and second location being continued with substantially equal volume and the frequency of said sound signals at said second location differing from the frequency of the sound signals at said first location by approximately 0.5 to 2 Hz. and gradually terminating the generation of said sound signals after the same have been continued for a predetermined length of time.

2. A method as set forth in claim 1, including the step of generating a light signal of modulated intensity simultaneously with said perceivable sound signals.

3. A method as set forth in claim 2, wherein said light is a blue light.

4. A method as set forth in claim 1, wherein the amplitude variation is a sinusoidal variation, and wherein said period is between 3 and 12 seconds.

5. A method as set forth in claim 1, wherein the ratio of maximum to minimum amplitude is within a range extending between 2:1 and 10:1.

6. A method as set forth in claim 1, wherein said frequency of one of said signals is 55 Hz.

7. Apparatus for inducing sleep in a subject, comprising, in combination, carrier signal generating means for generating a sinusoidal carrier signal in the frequency range between 40 and 80 Hz.; modulation signal-generating means for generating a sinusoidal modulation signal having a predetermined modulation period; modulator means for combining said sinusoidal carrier signal and sinusoidal modulation signal to generate an amplitude-modulated signal; speaker means adapted to convert said amplitude-modulated signal to an audible tone; delay means for delaying the generation of said amplitude-modulated signal for a predetermined time period after activation of said carrier signal generating means and said modulation signal-generating means; and electrical means for automatically and gradually terminating the generation of said amplitude-modulated signal after a predetermined time length.

8. A system as set forth in claim 7 also comprising a power source, switching means connecting said sleep-inducing apparatus to said power source when operated; wherein said delay means comprise a delay transistor connected to said modulator in such a manner that said modulator is operative when said transistor is in the blocked state and inoperative when said transistor is in the conductive state; and a delay capacitor connected between said switching means and the

base of said delay transistor in such a manner that the base current of said delay transistor causes said capacitor to become charged, blocking said delay transistor when sufficient charge has accumulated after said predetermined time period.

9. A system as set forth in claim **8**, wherein said electrical means comprise a first switch-out transistor; a switch-out resistance-capacitance circuit connected between the collector and base of said switch-out resistor and adapted to determine the switch-out time of said sleep-inducing arrangement; a second switch-out transistor having a base connected to the emitter of said first switch-out transistor, an emitter connected to ground, and a collector connected to the base of said delay transistor.

10. A system as set forth in claim **7**, wherein said carrier signal generating means and said modulating signal-generating means each comprise transistor amplifier means having an input and an output; a plurality of RC stages connected between said output and said input; and an emitter-follower circuit having an input connected to the input of said transistor amplifier means, and an output furnishing said carrier signal or said modulation signal.

11. A system as set forth in claim **10**, wherein said transistor amplifier means comprise an input transistor and an output transistor and means for overdriving said output transistor.

12. A system as set forth in claim **7**, wherein said modulator means generates an amplitude modulated signal whose degree of modulation is adjustable between 0 and 90 percent.

13. A system as set forth in claim **7** also comprising a low-frequency amplifier for amplifying said amplitude-modulated signal.

14. A system as set forth in claim **13**, wherein said low-frequency amplifier has a distortion factor of less than 0.5 percent at a 15 watt output.

15. A system as set forth in claim **7**, wherein said speaker means comprise a speaker in an acoustically absorbtive conventional speaker cabinet.

16. A system as set forth in claim **7** also comprising a source of direct current; means for applying said modulation signal to said direct current source, thus generating a modulated direct current; and a light source energized by said modulated direct current, thus generating an intensity-modulated light.

17. A system as set forth in claim **16** also comprising filter means arranged in front of said light, said filtering means permitting passage of one color only.

18. A system as set forth in claim **17**, wherein said color is blue.

19. A system as set forth in claim **7**, wherein said modulator comprises a transistor having an emitter, collector and base; feedback means, independent of frequency, providing feedback from the collector circuit to the base circuit; and an emitter resistor, R, having a value substantially equal to 1/Sa, where Sa is the slope of the curve of collector current plotted against base voltage at the operating point of said transistor.

UNITED STATES PATENT OFFICE

CERTIFICATE OF CORRECTION

Patent No. 3,576,185 Dated April 27, 1971

Inventor(s) Hansrichard Schulz et al.

It is certified that error appears in the above-identified patent and that said Letters Patent are hereby corrected as shown below:

On the cover sheet [72] "Singen Hohentwich" should read -- Singen Hohentwiel --; [73] "Saba Schwarzwalder Apparate-Ba Anstalf August Schiver Sohne GmbH" should read -- Saba Schwarzwalder Apparate-Bau-Anstalt August Schwer Sohne GmbH --.

Signed and sealed this 30th day of November 1971.

(SEAL)
Attest:

EDWARD M.FLETCHER,JR.
Attesting Officer

ROBERT GOTTSCHALK
Acting Commissioner of Pate