No. 747,585. PATENTED DEC. 22, 1903.

J. M. BROWNING.

AUTOMATIC FIREARM.

APPLICATION FILED APR. 3, 1902.

NO MODEL. 3 SHEETS—SHEET 1.

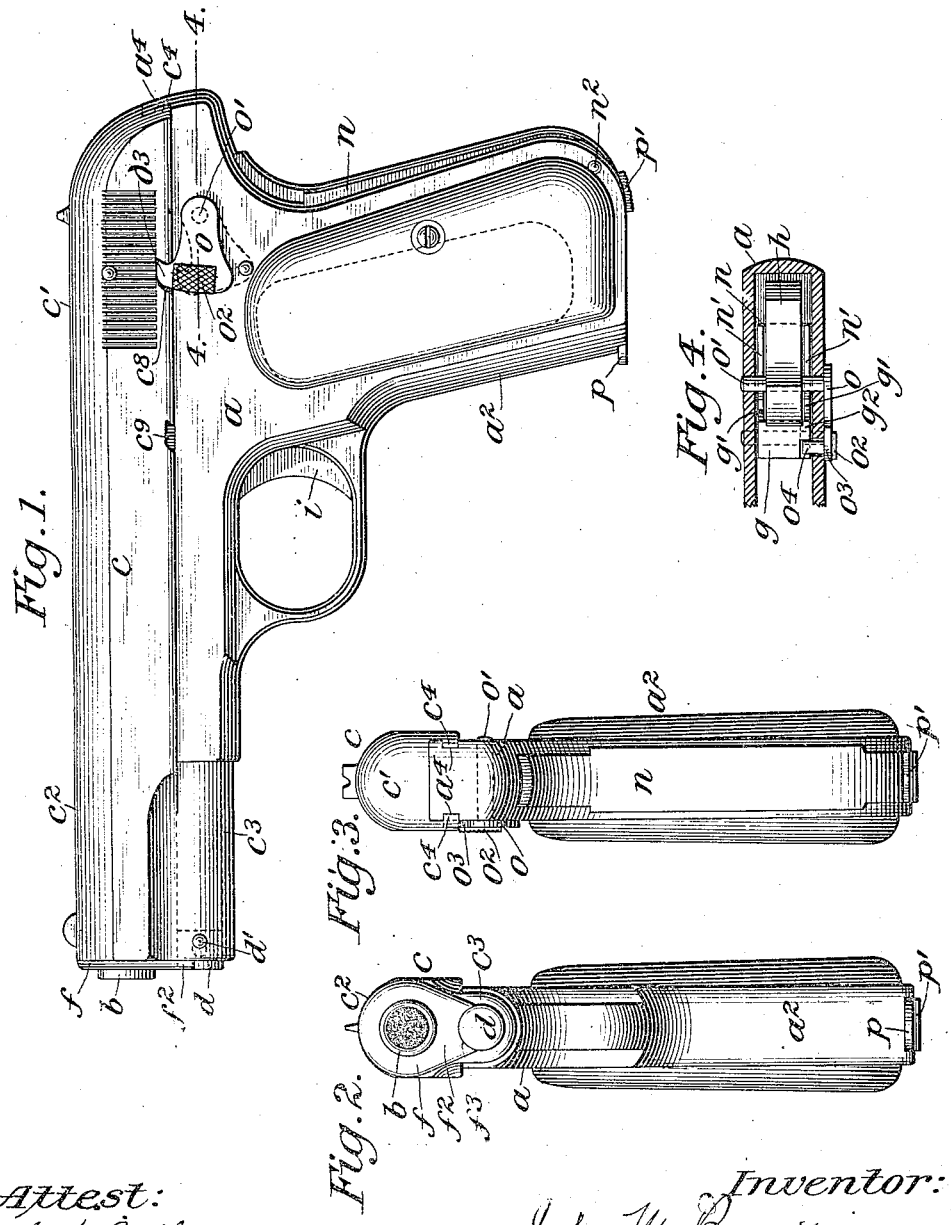

Attest:
A. N. Jesbera
L. E. Varney.

Inventor:
John M. Browning
by Redding, Kiddle & Greeley
Attys.

No. 747,585. PATENTED DEC. 22, 1903.

J. M. BROWNING.

AUTOMATIC FIREARM.

APPLICATION FILED APR. 3, 1902.

NO MODEL. 3 SHEETS—SHEET 2.

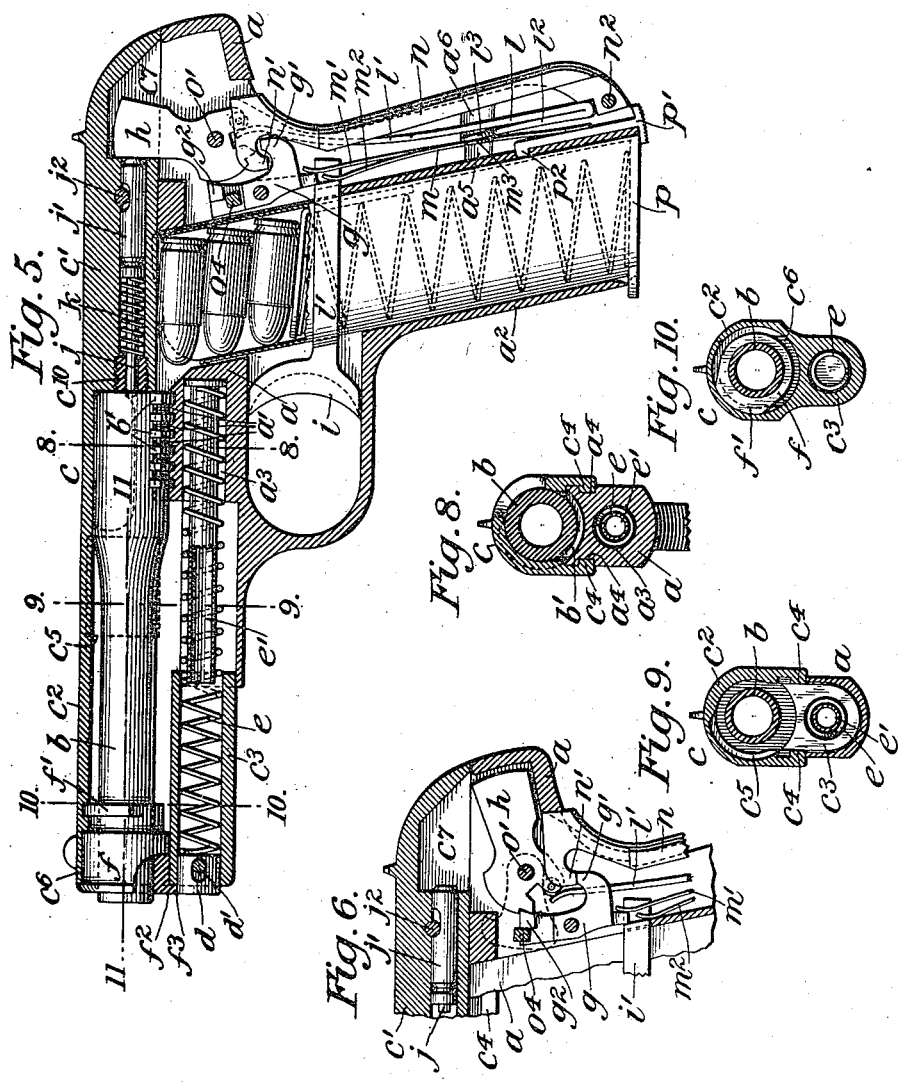

Attest:
A. N. Jesbera
L. E. Varney

Inventor:
John M. Browning
by Redding, Kiddle & Greeley
Attys.

No. 747,585. PATENTED DEC. 22, 1903.

J. M. BROWNING.

AUTOMATIC FIREARM.

APPLICATION FILED APR. 3, 1902.

NO MODEL. 3 SHEETS—SHEET 3.

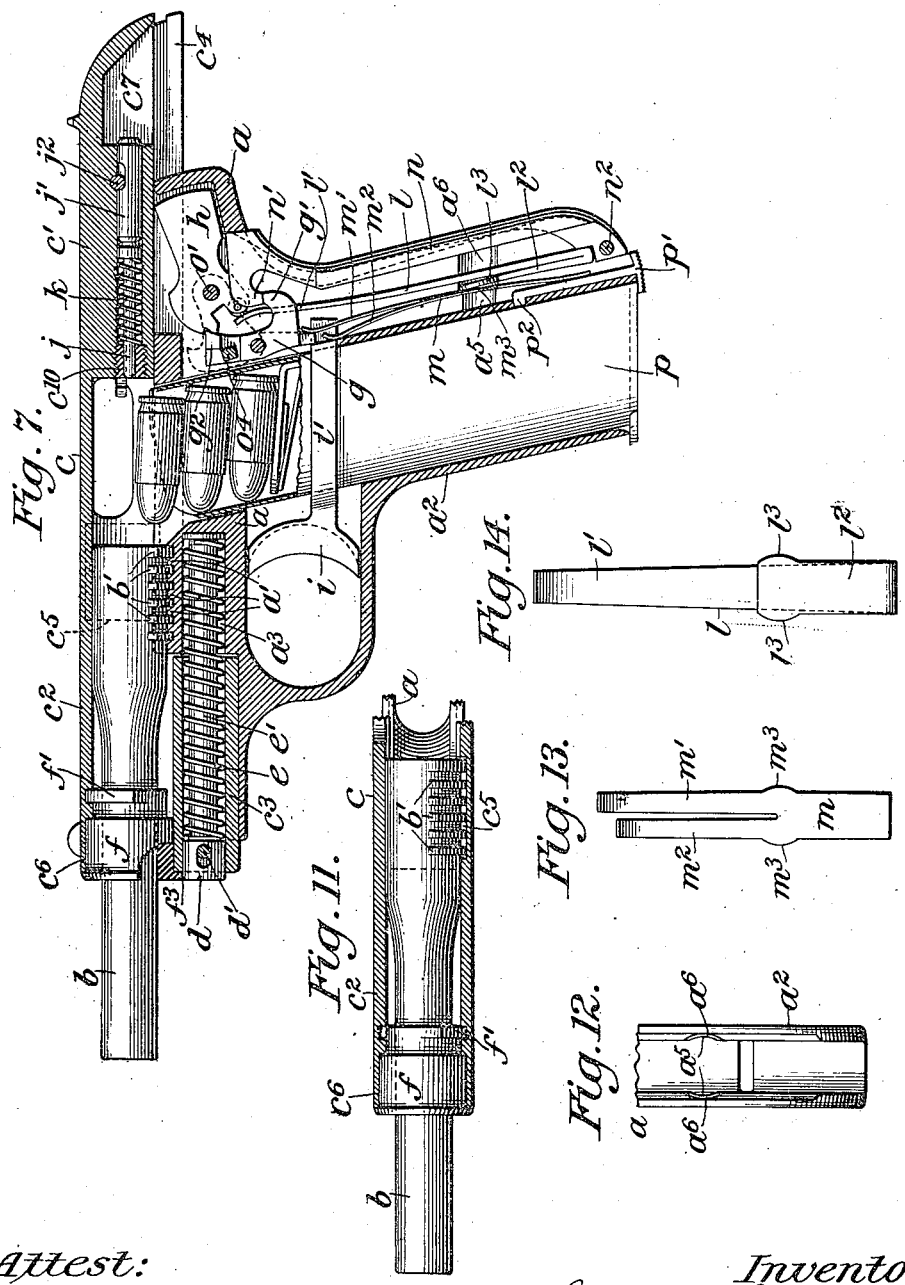

Attest:
A. N. Jesbera.
L. E. Varney.

Inventor:
John M. Browning
by Redding, Kiddle & Greeley
Attys.

No. 747,585. Patented December 22, 1903.

UNITED STATES PATENT OFFICE.

JOHN M. BROWNING, OF OGDEN, UTAH.

AUTOMATIC FIREARM.

SPECIFICATION forming part of Letters Patent No. 747,585, dated December 22, 1903.

Application filed April 3, 1902. Serial No. 101,169. (No model.)

To all whom it may concern:

Be it known that I, JOHN M. BROWNING, a citizen of the United States, residing in Ogden, county of Weber, in the State of Utah, have invented certain new and useful Improvements in Firearms, of which the following is a specification, reference being had to the accompanying drawings, forming a part hereof.

This invention relates to automatic firearms of that description in which the several operations—such as the opening of the breech after firing a shot, the ejection of the empty cartridge-shell, the cocking of the hammer, the presentation and introduction of a new cartridge to the chamber of the barrel, and the closing of the breech—are automatically effected through or by the energy of the recoil of the breech-bolt or that part which at the time of firing closes the breech of the barrel, and more especially relates to firearms of this description in which energy is stored during the opening movement of the breech-bolt in a spring, there action of which is utilized to actuate the return or closing movement of the breech-bolt.

The main object of the invention is to produce a firearm of this class which shall be simple and inexpensive in construction, reliable, and safe under all conditions of use.

Another object of the invention is to produce a firearm of this class in which the barrel to insure accuracy in firing shall be rigidly held upon but located entirely above the frame near the sighting-line of the arm and in which the attachment of the barrel to the frame shall support the barrel rigidly, but shall allow the barrel at will and readily to be detached and removed and to be replaced and attached without requiring the use of any tool therefor.

Another object of the invention is to produce a firearm of this class in which to insure the absolute safety of the user the cover or breech-slide, the movable abutment for the reaction-spring, and the breech-bolt shall be combined in one strong integral whole without a division or joint therein and shall be mounted upon the top of the frame from the front and be so held and guided in its reciprocation thereon that it can be removed from the frame as one whole only and in the forward direction alone, carrying with it the barrel previously disengaged from the frame.

Another object of the invention is to produce a firearm of this class in which not only shall the possibility of any part of the arm being thrown rearward be absolutely guarded against, but in which also the blowing rearward from the arm of escaping powder-gases, due to defective cartridges or their primers, shall be positively prevented.

Another object of the invention is to produce a firearm of this class in which for safety in handling and carrying the firing mechanism, with the exception of the trigger shall be entirely inclosed and concealed in the arm and which shall be provided with a device for automatically locking the firing mechanism whenever it is cocked or made ready for firing, such locking device to be actuated to unlock the firing mechanism by the act of grasping the arm and holding it in the position for firing. Whenever the firing mechanism is released and moved from the cocked position, this locking device shall thereby be automatically moved from its operative to its inoperative position and shall there be positively held until the recocking of the firing mechanism shall again move the locking device to its operative position.

A further object of the invention is to provide the firearm in the said device for automatically locking the concealed firing mechanism when cocked with a reliable indicator for showing at a glance whether the firing mechanism is in the cocked or in the released position.

Another object of the invention is to produce a firearm of this class which for safety in handling and carrying, even when a cartridge is in the chamber of the barrel and the firing mechanism is cocked, shall be provided with a safety device for at will and readily locking the combined breech-slide and breech-bolt in its closed forward position, at the same time positively locking the cocked firing mechanism, or for as readily unlocking these parts, and thereby adapting the arm for instant use. For safety and convenience while examining and cleaning the arm and while charging it with cartridges said safety device shall, further, be adapted at will to lock the

combined breech-slide and breech-bolt in its rearward open position and at the same time to lock the cocked firing mechanism or to as readily unlock these parts.

A further object is to provide the firearm in the said safety device for simultaneously locking the breech-slide and the cocked firing mechanism with a reliable indicator perceptible to touch, as well as to sight, for showing if the arm is ready for instant use or not.

Another object of the invention is to produce a firearm in which for simplicity of construction and for prevention of accidental firing the means by which the device for automatically locking the cocked firing mechanism is acuated shall also be the means by which the safety device for at will locking the breech-slide simultaneously with locking the cocked firing mechanism is held or retained in its operative position. Besides thus actuating both these locking devices the same means, moreover, shall also be the means by which the firing mechanism when released is actuated to discharge a cartridge, so that whenever breakage or failure of the common means causes both the automatic locking device to become inoperative and the manual safety device to fail to remain in its operative position the firing mechanism shall simultaneously become incapable of exploding a cartridge.

These objects are attained by mechanism of simple and practical construction which is efficient, perfectly safe in use, and not liable to get out of order.

The invention is shown herein as embodied in a gas-operated magazine-pistol; but it will be understood that the invention is applicable to other firearms. Therefore it is not intended to restrict the present invention to a magazine-pistol nor to any particular kind of firearm nor to the combination of the several features of improvement in a single structure.

In the accompanying drawings, wherein is illustrated an embodiment of the invention, Figure 1 is a left-hand side elevation of the pistol with the breech closed. Figs. 2 and 3 are respectively front and rear end views of the same. Fig. 4 is a horizontal detail section on the plane indicated by the line 4 4 of Fig. 1. Fig. 5 is a longitudinal vertical section of the pistol with the breech closed and the hammer down, the barrel being shown in elevation. Fig. 6 is a vertical detail section on the same plane as Fig. 5, but with the hammer in its cocked position and the sear locked, the normal position of these parts when other parts are as shown in Fig. 1. Fig. 7 is a section similar to Fig. 4, but with the breech open. Figs. 8, 9, and 10 are transverse sections on the planes indicated by the lines 8 8, 9 9, and 10 10, respectively, of Fig. 5. Fig. 11 is a horizontal detail section through the breech-slide on the plane indicated by the line 11 11 of Fig. 5, but with the breech-slide moved rearwardly, the barrel being shown in plan view. Fig. 12 is a detail rear view of the lower part of the pistol-grip. Fig. 13 is a detail view of the combined trigger, sear, and magazine-catch spring. Fig. 14 is a detail view of the mainspring.

Similar letters refer to similar parts throughout the several views.

The pistol represented in the drawings comprises three main parts—the frame a, the barrel b, and the breech-slide c.

The top surface of the frame a forms a straight seat for the reciprocating breech-slide c. In the upper portion of the frame is the receiver and below it the grip or handle a^2, which is preferably made integral with the frame, but may be formed separately and attached thereto in any suitable manner.

The barrel b is securely engaged with the top of the frame to prevent longitudinal movement and without any longitudinal movement of the barrel during the act of locking by a series of transverse segmental ribs b' at right angles to the axis of the barrel, projecting downwardly from the under side of the barrel near its rear end and fitting into a series of corresponding segmental grooves a' in the open top of the frame in front of the receiver, the width of the series of ribs being substantially equal to the largest diameter of the barrel, two parallel surfaces extending from the sides of the barrel to the ends of the series of ribs. To lock and to unlock the barrel to and from the frame when the breech-slide is in place, it is revolved on its longitudinal axis until the projecting ribs swinging sidewise are respectively engaged with or disengaged from the grooves in the frame and clear the top surface of the frame. When the breech-slide is not in place, the barrel can be disengaged from the frame by lifting it. The barrel is held down when engaged with the frame by the breech-slide c, which combines in one integral piece the breech-bolt c', the barrel-cover c^2, and the front abutment c^3 for the reaction-spring. The top of the breech-slide is semicylindrical, and its straight bottom is fitted to slide rearward and forward upon the top of the frame. The sides of the breech-slide project downward, overlapping those of the frame, and are provided with longitudinal ribs c^4, which interlocking with corresponding grooves a^4 in the sides of the frame serve to secure the breech-slide upon the frame and to guide it in its reciprocations thereon. In rear of the barrel the breech-slide forms the breech-bolt c', forward of which extends the tubular cover c^2, which incloses the barrel and, like the barrel, projects some distance forward of the frame. This projecting forward portion of the breech-slide carries the depending front abutment c^3, tubular in form and parallel to the axis of the barrel. In the forward portion of the frame is provided a longitudinal seat a^3 for the reaction-spring e, the axis of which lies in the rearwardly-prolonged axis of the abutment c^3, and the forward portion of the bore of the seat a^3 is enlarged and opened at the top, so that the

depending abutment c^3 can enter and slide therein when the breech-slide moves rearward. The front opening of the abutment c^3 is closed by a plug d, against which the forward end of the reaction-spring e bears, while the rear end of the spring e bears against the end of the seat a^3 in the frame, the spring e thus exerting its tension in yieldingly supporting the breech-slide c in the forward position. As the depending abutment c^3 is integral with and in its entire length strongly joined to the breech-slide and is projected into the plane of the frame itself, the breech-slide can be mounted upon and removed from the frame only from the front and is positively prevented from being thrown rearwardly from the frame, the shoulder formed by the enlarged bore of the seat a^3 and the front end of the top of the frame limiting the rearward movement of the breech-slide by contact with the rear end of the abutment c^3. This arrangement, besides forming an additional means of securing the breech-slide upon the frame and guiding it in its movements thereon, provides in the frame an abutment of great strength capable of absorbing the shock should the breech-slide be thrown rearward with unusual violence, such as might be caused by the firing of cartridges containing excessive powder charges. In order to prevent the central part of the reaction-spring e from bending during its compression by the rearward movement of the breech-slide, a piston e' is inserted into the rear end of the spring e, the head of the piston bearing against the end of the seat a^3 and its body extending through the spring far enough to project into the abutment c^3 of the breech-slide, thus providing a guide for the unsupported portion of the spring in the enlargement of the seat a^3. After the breech-slide has been mounted from the front upon the frame it is secured thereon by the interlocking of the barrel with the top of the frame, the rear end of the barrel forming an abutment on the top of the frame against which the face of the breech-bolt c' will be yieldingly supported by the tension of the reaction-spring e. The barrel may be introduced into the breech-slide after the latter has been mounted upon the frame, and it may also be removed from the breech-slide while upon the frame; but with the present improvements the barrel may be first introduced and adjusted in the barrel-cover c^2 of the breech-slide, and then breech-slide and barrel together be mounted upon the frame and there secured by the interlocking of the barrel with the frame. This method is preferable, as it is simpler and may be more quickly performed than the mounting of these parts each separately upon the frame.

Forward of the breech-bolt c' the interior of the barrel-cover c^2 is bored out large enough for the passage through it of the rear end of the barrel enlarged by the projection forming the series of locking-ribs b' if said projection stands vertically below the barrel, but not large enough to allow any rotation of the barrel in the barrel-cover c^2 except in the part c^5, where a recess, which may be segmental, permits the turning of the locking-ribs laterally enough to clear the top of the frame. The location of this recess c^5 is such that it corresponds with the series of locking-grooves in the top of the frame when the breech-slide approaches the rearward limit of its movement on the frame.

After inserting the barrel into the breech-slide and turning it on its axis until the projecting ribs b' stand in the recess c^5 the front end of the breech-slide is closed by the bushing f, which supports the muzzle of the barrel and fits into the enlarged front end c^6 of the bore of the barrel-cover. The rear end of the bushing f is reduced in diameter and carries a segmental locking-rib f', and in rear of the enlargement c^6 a corresponding recess is cut in the barrel-cover, into which the rib f' is entered by a partial rotation of the bushing f on its axis, thus securing the bushing f to the breech-slide, with which it reciprocates, the bushing sliding on the cylindrical front end of the stationary barrel. At the front the bushing f has a flange f^2, which bears against the front of the breech-slide and projects downward, partly overlapping the abutment c^3 and provided with a segmental recess f^3, which corresponds with the bore of the abutment c^3, forming the seat of the reaction-spring e when the bushing is in its locked position. The plug d, closing said seat at the front, is secured therein by a pin d', passing transversely through the abutment and the plug, the hole in the plug d being slightly elongated, so as to allow a limited longitudinal movement of the plug d in the abutment c^3 and so that under the pressure of the reaction-spring e the plug d projects slightly from the front of the abutment and by entering the recess f^3 in the flange of the bushing locks the bushing against rotation.

With the barrel b and the bushing f adjusted as described in the breech-slide and the reaction-spring e, with the piston e', inserted in the seat a^3 of the frame the breech-slide is mounted upon the frame, the front end of the spring e being guided into the seat in the abutment c^3. Pressing the breech-slide rearward upon the frame will carry the locking-ribs b' of the barrel over the grooves a' in the top of the frame, when a partial rotation of the barrel will securely interlock barrel and frame, and thereby secure the breech-slide upon the frame. On releasing the breech-slide it will, under the pressure of the reaction-spring, move to the forward position and close the breech. For dismounting the breech-slide it is pressed rearward until the locking-ribs b' may be turned into the recess c^5, after which the breech-slide, with the barrel, may be drawn from the frame. It will be observed that through the described construction the assembling and the

separation of the barrel, breech-slide, and frame can be accomplished without the aid of any tool or implement whatever.

The location of the recess c^5 prevents the accidental unlocking of the barrel, because it is so arranged that during the operation of the pistol the breech-slide is always in motion at the place where the locking-ribs b correspond with the recess, and it is carried rapidly beyond that position, so as to give the barrel no chance to rotate, but to always keep it securely interlocked with the frame.

The front sight and the rear sight are arranged upon the ends of the breech-slide, and thus the axis of the barrel, which rests on top of the frame and is merely covered by the shell of the breech-slide, is adjacent to the line connecting the sights by which the pistol is aimed.

The breech-bolt carries the firing-pin and the cartridge-shell extractor, and in front of the breech-bolt an opening is provided in the top of the breech-slide for the ejection of the cartridge-shells by the action of a shoulder in the receiver. The cartridges are supplied by a detachable magazine seated in the grip and provided with a spring-actuated follower by which the cartridges are successively raised to the receiver, where the forward motion of the breech-bolt carries the topmost cartridge from the magazine to the chamber of the barrel. These devices may be as usual in this class of arms and do not require further description.

In rear of the grip the hammer h and the sear g are pivotally mounted in the frame, while in front of the grip the trigger i is arranged, a rearward extension i' on the trigger serving to connect the trigger with the sear. The mainspring l and the trigger and sear-spring m are arranged in the grip in rear of the magazine-seat.

In its released position the hammer h projects from the top of the frame into a chamber c^7, formed in an extension of the breech-slide in rear of the breech-bolt c', which covers the hammer and gives a smooth rounded form to the pistol. This construction serves to prevent the catching of the arm when hurriedly drawn from a pocket, and the solid imperforate rear end of the breech-slide or wall of the chamber or recess c^7, having no opening in line with the axis of the firing-pin, positively prevents powder-gases escaping from the chamber of the barrel through the seat of the firing-pin from being blown into the face of the person firing the arm. This is especially important in gas-operated arms in which the rearward pressure of the gases of explosion is directly utilized for opening the breech of the arm and in which an excessive powder charge, a defective cartridge-case, a punctured primer, or the failure of the reaction-spring may each result in the rearward escape of a portion of the burning powder-gases. Against these the solid rear end of the breech-slide forms a shield.

In order to leave the rear end of the breech-slide solid the seat in the breech-bolt for the firing-pin is bored out from the front, and later a bushing c^{10} is fastened in the face of the breech-bolt, which allows only the point of the reduced front end of the firing-pin to project through it. To permit the introduction and removal of the firing-pin to and from the breech-bolt without each time removing this bushing, the firing-pin is divided in two sections j and j', each of which is short enough to enter into the seat from the rear through the chamber c^7, thus allowing the front bushing to remain permanently fixed in the breech-bolt. The forward section j forms the firing-pin point and has a head for the retraction-spring k to abut against, said spring being introduced with the piece j into the breech-bolt and there confined between the firing-pin head and the fixed front bushing. The rear piece j' is cylindrical and is removably locked in the breech-bolt by a transverse pin j^2 passing through the breech-bolt and through a recess in the top of the piece j'.

The entire firing mechanism of the pistol, with the exception of the trigger, being covered and concealed and it being, therefore, impossible to at will lock the hammer by the sear and the usual safety-notch in the hammer, a safety or grip lever n is provided in the rear side of the grip, which serves to automatically lock the firing mechanism if cocked and only to release it when the grip is grasped, as in firing the arm. The position of the lever n also indicates if the concealed hammer h is cocked or is in the released position. The lever n extends upward from its pivot n^2, on which it has a limited swinging movement, and the mainspring l is seated upon a shoulder on the lever n above its pivot so as to yieldingly hold the lever in its rearmost position, in which the upper portion of the lever extends considerably from the rear of the grip. When the lever n is pressed forward, it swings on its pivot until it is entirely in the grip and the rear of the lever corresponds with the outline of the grip. At its top the lever n has a forwardly-projecting hook or hooked projection n', which when the lever n is in its normal rear position stands above a similar hook or hooked projection g', projecting rearward from the sear g, so that then the sear cannot be moved on its pivot, and thereby the trigger is locked in its forward position. When pressed into the grip, the lever n carries the hook n' forward of the hook g' on the sear to a position where a recess in the sear stands below the hook n' and a similar recess in the lever stands above the hook g', thus leaving the sear free to be moved by the trigger. The upper rear corner of the sear is fitted to enter the cock-notch of the hammer h, so as to support the hammer when cocked, the sear-spring m pressing the lower end of the sear forward and through the extension i' also holding the trigger in its forward position. If now the

trigger i is pulled while the lever n is pressed into the grip, the trigger extension i' will move the sear g on its pivot and cause it to release the hammer and will simultaneously cause the hook g' of the sear to enter the recess in the lever n, and thus to interlock with the hook n' of the lever, thereby locking the lever n, so that it cannot be moved rearwardly out of the grip. As soon as the sear has released the hammer the mainspring l causes the hammer to fall, thus carrying the hub of the hammer to the rear of the top of the sear, thereby positively locking the sear in its released position, in which it continues to positively retain the grip-lever n in the grip. On again cocking the hammer, as by the rear movement of the breech-slide, the sear, actuated by the sear spring, enters the notch in the hammer and simultaneously releases the hook n' of the lever n. Then the mainspring will move the lever n rearward so as to project from the grip and also carry the hook n' over the hook g' of the sear, thereby again locking the sear and the trigger and preventing the release of the hammer. By this construction the cocked hammer cannot be released until the grip-lever is pressed into the grip, and the projection of the grip-lever from the grip is a positive indication that the hammer is cocked and locked, whereas if the grip-lever does not project from the grip it indicates that the hammer is in its released position and must be cocked before the pistol can be fired.

Pivoted to the left side of the frame convenient to be operated by the thumb of the hand grasping the grip is the manual safety-lever o, the pivot o' of which is an integral part of the lever and, passing through the center of the hammer h, at the same time serves as the hammer-pivot. This arrangement is not only simple and inexpensive, as it reduces the number of parts of the mechanism, but by it an important result is obtained, as hereinafter described.

The safety-lever o carries on its surface the checked thumb-piece o^2, at its top the hook-shaped projection o^3, and on its inner side the projecting square stud o^4, which extends through a small segmental opening in the wall of the frame to the side of the sear g, on which is provided a similar square stud or projection g^2 near its upper rear corner, the remaining portion of the left side of the sear g above its pivot being cut away so as to allow the stud o^4 on the safety-lever o to freely move by the side of the sear into and out of the path of the stud g^2 thereon.

In the left side of that portion of the breech-slide which overlaps the frame two recesses c^8 and c^9 are cut and so located that the recess c^8 corresponds with the hook o^3 on the safety-lever o when the breech-slide is fully forward and the breech closed and the recess c^9 corresponds with the hook o^3 when the breech-slide is in its rearmost position and the breech fully open. Thus in both these positions the safety-lever may be turned upward to positively lock the breech-slide either when fully closed or when fully open. The upward movement of the safety-lever carries the stud o^4 thereon to a position in front of the stud g^2 on the sear, so as to positively lock the sear against movement and prevent the release of the cocked hammer.

If the hammer has been released and stands in its position of rest, which it can occupy only while the breech is closed, the hub of the hammer, standing in rear of and against the top of the sear, locks the sear in its released position, in which the stud g^2 on the sear stands above the stud o^4 on the safety-lever o, and thus prevents the safety-lever from being moved until the hammer is again cocked. The safety-lever thus being held immovable is a positive indicator that the hammer is not cocked and that the pistol is not ready for instant use, but that a rearward and forward movement of the breech-slide is required to cock the hammer. When, however, the closed breech-slide is locked by the safety-lever, it indicates that the hammer is cocked and locked and that by simply turning down the safety-lever the pistol is made ready for firing as long as cartridges are supplied by the magazine. The safety-lever o thus is an indicator of the condition of the pistol, not only apparent at a glance, but also perceptible in the dark, as the yielding of the lever or its immovable condition can at once be felt.

The cartridge-magazine p is detachably held in the grip by the magazine-catch p', which is at p^2 pivotally mounted in the grip and is yieldingly held in operative position by the lower end of the combined sear and trigger-spring m. The spring m, as shown in Fig. 13, is divided in two parts in its upper portion. The longer one, m', of these parts serves to actuate the sear, while the shorter one, m^2, rests against the extension i' of the trigger and holds it in its forward position. Below the division the spring m has a segmental lateral projection m^3, which fits into a corresponding segmental lateral recess a^5 in the grip in rear of the magazine. In this manner the spring is held from moving up or down in the grip, but the recess being considerably greater in depth than the thickness of the spring allows the spring some movement rearward and forward in the recess, whereby the spring is adapted to exert its elasticity through its entire length, and thus both ends of the spring may be utilized.

As shown in Fig. 7, the mainspring l is V-shaped, one limb, l', bearing against the hammer, while the other shorter limb, l^2, has a segmental projection l^3, which fits into a corresponding segmental recess a^6 in the grip in rear of the sear and trigger-spring m, thus confining the mainspring against moving up or down, but allowing it to exert its elasticity through its entire length. The projection on the mainspring and the corresponding recess in the grip being larger than the projection

on the sear and trigger-spring and its recess, the short limb of the mainspring rests against a shoulder in the grip, thereby retaining the sear and trigger-spring in its recess, without, however, fully compressing it.

As heretofore described, the lower end of the mainspring rests against a shoulder on the grip-lever n above its pivot n^2 and presses the lever rearward to its operative position, in which the lever locks the sear, while the longer limb of the mainspring presses against the hammer, and by the hammer this pressure of the mainspring is transmitted to the hammer-pivot o', and as this pivot is an integral part of the safety-lever o the pressure of the mainspring serves to yieldingly support the safety-lever o in either of the positions to which it may be moved. By this construction the two safety devices for locking the firing mechanism, the grip-lever, and the safety or locking lever both depend for their efficiency on the mainspring, and therefore should either or both of these safety devices fail on account of the breakage or failure of the spring the pistol is yet safe from accidental firing, because the failure of the spring also makes the hammer unable to strike the blow necessary for exploding a cartridge.

From the foregoing description the operation of the improved firearm will be readily understood. A filled cartridge-magazine is inserted in the grip and the breech-slide is once drawn rearward by hand. This opens the chamber of the barrel, extracts the empty cartridge-shell, and ejects the same, cocks the hammer, presents a cartridge in front of the breech-bolt, and compresses the reaction-spring. When the breech-bolt is released, the reaction-spring returns it to the forward position and transfers the topmost cartridge from the magazine to the chamber of the barrel. On now pulling the trigger a shot is fired, and the rearward pressure of the powder-gases in the barrel is utilized to actuate the rearward movement of the breech-slide and to store energy in the reaction-spring to effect the forward movement of the same. These operations may be repeated so long as cartridges are supplied.

It will be understood that the breech-bolt is not positively locked to the barrel in its closed position, but is yieldingly held in the closed position by the reaction-spring. By the improved construction the barrel and the frame are of such lightness that the breech-bolt, barrel-cover, and abutment, together constituting the breech-slide, may be of great strength and weight, and as the inertia of this part has to be overcome in opening the breech, in addition to the pressure of the reaction-spring, the weight is a reliable safeguard which retards the opening of the breech until the bullet has passed from the muzzle of the barrel. The momentum of the heavy breech-slide completes the rearward movement after the pressure of the gases in the barrel has been relieved.

It will be understood that the several features of improvement herein described are not necessarily combined in the same structure with one another nor with the other features of the firearm, which for purposes of explanation are shown and described herein, nor are they necessarily employed in a firearm of the particular character of that shown. Obviously, also, various changes in form and arrangement of parts may be made within the scope of the invention.

I claim as my invention—

1. In a firearm, the combination of a frame, a barrel supported on top of the frame and engaged with the frame by transverse, segmental ribs and grooves to prevent longitudinal movement, a reaction-spring supported in the frame below the barrel, and a breech-slide reciprocating on the frame and covering and fitting closely on the barrel to hold it in engagement with the frame, whereby the barrel is adapted to be disengaged from the frame by relative transverse movement of the ribs and grooves when the barrel is uncovered and by relative rotary movement when the barrel is covered.

2. In a firearm, the combination of a frame, a barrel supported on top of the frame and engaged therewith by transverse, segmental ribs and grooves to prevent longitudinal movement, and a cover movable on the frame and holding the barrel in engagement with the frame, whereby the barrel is adapted to be disengaged from the frame by relative transverse movement of the ribs and grooves when the barrel is uncovered and by relative rotary movement when the barrel is covered.

3. In a firearm, the combination of a frame, a barrel having projecting ribs in engagement with grooves in the frame, and a cover movable on the frame and holding the barrel in engagement with the frame, said cover having a recess to receive the projecting ribs of the barrel when the latter is rotated to disengage the ribs from the grooves of the frame.

4. In a firearm, the combination of a frame, a barrel having projecting ribs in engagement with grooves in the frame, a cover holding the barrel in engagement with the frame, and a bushing in the forward end of the cover to support the muzzle of the barrel and removable to permit the projecting ribs of the barrel to pass through the forward end of the cover.

5. In a firearm, the combination of a frame, a barrel having projecting ribs in engagement with grooves in the frame, a cover movable on the frame and holding the barrel in engagement with the frame, said cover having a recess to receive the projecting ribs of the barrel when the latter is rotated, and a bushing removably held in the forward end of the cover to support the muzzle of the barrel and to permit the passage of the projecting ribs.

6. In a firearm, the combination of a frame, a barrel supported on the frame and having an enlarged rear end, a cover holding the

barrel on the frame, a bushing in the forward end of the cover and having a projection to engage a transverse groove in the cover, said bushing having a notched flange, and a movable plug engaging said notched flange to hold the bushing from rotation.

7. In a firearm, the combination of a frame, a barrel supported on the frame and having an enlarged rear end, a cover holding the barrel on the frame, a bushing in the forward end of the cover and having a projection to engage a transverse groove in the cover, said bushing having a notched flange, and a spring-pressed plug supported by the cover and engaging said notched flange.

8. In a firearm, the combination of a frame having a longitudinal, tubular seat below the barrel, a barrel, a breech-slide comprising in one integral piece a breech-bolt in rear of the barrel, a cover for the barrel and a tubular abutment in front of and projected into the plane of the frame, whereby said slide is movable from the frame in a forward direction only and is positively held from removal rearwardly, and a reaction-spring located in said tubular seat and said tubular abutment.

9. In a firearm, the combination of a frame, a barrel, a breech-slide comprising in one integral piece a breech-bolt in rear of the barrel, a cover for the barrel and an abutment in front of the frame, and a reaction-spring seated partly within said frame and partly within said abutment.

10. In a firearm, the combination of a frame, a rotatable barrel having on its under side segmental ribs at right angles to the axis of the barrel in engagement with grooves in the upper side of the open frame, and a breech-slide comprising a cover holding the barrel in engagement with the frame and a breech-bolt in rear of the barrel.

11. In a firearm, the combination of a frame, a rotatable barrel having projecting segmental ribs in engagement with grooves in the frame, and a breech-slide comprising a cover for the barrel, having a recess to receive the projecting ribs of the barrel, and a breech-bolt in rear of the barrel.

12. In a firearm, the combination of a frame, a barrel, coöperating ribs and grooves on the frame and under side of the barrel only at right angles to the axis of the barrel, the barrel being adapted to be engaged with the frame by partial rotation, a breech-slide comprising a cover for the barrel to hold it in engagement with the frame, a breech-bolt in rear of the barrel, and an abutment in front of the frame, and a reaction-spring interposed between the abutment and the frame.

13. In a firearm, the combination of a frame, a barrel adapted to be engaged with the frame by rotation and having an enlarged rear end, a breech-slide comprising a cover for the barrel, a breech-bolt in rear of the barrel, and an abutment in front of the frame, a removable bushing in the forward end of the cover, and a reaction-spring interposed between the abutment and the frame.

14. In a firearm, the combination of a frame, a barrel, interlocking ribs and grooves on the frame and barrel at right angles with the axis of the barrel, a breech-slide comprising in one integral piece a cover fitting over the barrel, a breech-bolt in rear of the barrel, a solid imperforate wall in rear of the breech-bolt with a recess for the hammer between the breech-bolt and said wall, and an abutment projected into the plane of the frame in front of the same, and a reaction-spring coöperating with said abutment.

15. In a firearm, the combination of a frame, a barrel, a hammer mounted in a recess in the frame, and a breech-slide reciprocating on the top of the frame and comprising a cover for the barrel and a breech-bolt in rear of the barrel said breech-slide having in rear of the breech-bolt a recess to receive the hammer, whereby the hammer is always covered.

16. In a firearm, the combination of a frame, a barrel, a breech-slide reciprocating on top of the frame and having an integral abutment projected into the plane of the frame in front of the same, a reaction-spring coöperating with said abutment, a breech-bolt, and a solid imperforate wall in rear of the breech-bolt with a recess for the hammer between the breech-bolt and said wall, a firing-pin carried in the breech-bolt and having its forward end reduced in diameter, said breech-bolt having a seat to receive the firing-pin, and a bushing in the forward end of said seat surrounding the front portion of the firing-pin.

17. In a firearm, the combination of a frame, a barrel, a breech-slide having a breech-bolt and a solid, imperforate wall in rear of the breech-bolt and separated therefrom by a recess shorter than the breech-bolt, said breech-bolt being bored to receive the firing-pin, and a firing-pin longer than said recess and divided in two parts whereby the parts of the firing-pin can be removed successively from the breech-bolt through said recess.

18. In a firearm, the combination of a hammer, a sear coöperating with the hammer, a grip-lever adapted to engage and lock the sear, and a mainspring coöperating with the hammer and with the grip-lever.

19. In a firearm, the combination of a hammer, a grip-lever and a sear coöperating both with the hammer and with the grip-lever, said sear being formed to engage the hammer and to be held from movement when the hammer is down, said sear also having a part which engages the grip-lever to hold the same from movement when the hammer is down and a part which is engaged by the grip-lever to hold the sear from movement when the hammer is up until the grip-lever is moved to release the sear.

20. In a firearm, the combination of a hammer, a sear coöperating with the hammer, and a grip-lever, said sear and grip-lever having

interengaging projections whereby the grip-lever in one position locks the sear and in another position is locked by the sear.

21. In a firearm, the combination of a hammer, a sear coöperating with the hammer and having a hooked projection, and a grip-lever having a corresponding hooked projection turned in the opposite direction, whereby in one position the ends of the projections oppose each other to lock the sear and in another position the projections interlock to lock the grip-lever.

22. In a firearm, the combination of a frame, a reciprocating breech-slide, and a safety-lever pivoted on the frame said breech-slide having forward and rearward recesses for engagement with said safety-lever, whereby the breech-slide is held either in its forward or rearward position on the frame.

23. In a firearm, the combination of a frame, a reciprocating breech-slide, a safety-lever pivoted on the frame, said breech-slide having recesses for engagement with the safety-lever, a hammer, and a mainspring coöperating with the hammer, said safety-lever having a rigid pivotal shaft upon which the hammer is loosely pivoted, whereby the pressure of the mainspring holds the safety-lever in position.

24. In a firearm, the combination of a frame, a reciprocating breech-slide, a safety-lever adapted to engage the breech-slide and a sear, said safety-lever and sear having coöperating projections whereby the movement of the safety-lever to engage the breech-slide locks the sear against movement.

25. In a firearm, the combination of a frame, a safety-lever pivoted on the frame, a sear, and a hammer, said sear and safety-lever having coöperating projections, whereby when the hammer is down the projection on the sear stands in the path of the projection on the safety-lever and prevents movement of the latter.

26. In a firearm, the combination of a frame, a reciprocating breech-slide, a safety-lever pivoted on the frame and adapted to engage the breech-slide, and a sear pivoted within the frame and having a projection, said safety-lever having a projection extended through a slot in the frame to coöperate with the projection on the sear.

27. In a firearm, the combination of a frame, a sear, a magazine-catch and a sear and magazine-catch spring having lateral projections engaging lateral recesses in the frame with a depth greater than the thickness of the projections, whereby the spring is held from moving up or down but with both ends free and with freedom to exert its elasticity through its entire length.

28. In a firearm, the combination of a frame, a hammer and a mainspring having lateral projections engaging lateral recesses in the frame with a depth greater than the thickness of the projections, whereby the spring is held from moving up or down and the elasticity of the whole spring may be utilized.

29. In a firearm, the combination of a frame, a hammer and a V-shaped mainspring having lateral projections on one limb engaging lateral recesses in the frame with a depth greater than the thickness of the projections, whereby the spring is held from moving up or down and the elasticity of the whole spring may be utilized.

30. In a firearm, the combination of a frame having stepped, lateral recesses, a sear, a hammer, a sear-spring having lateral projections engaging the inner portions of said stepped, lateral recesses, and a mainspring having lateral projections engaging the outer portions of said stepped, lateral recesses and retaining the sear-spring.

31. In a firearm, the combination of a frame, a reciprocating breech-slide, a safety-lever adapted to engage the breech-slide and having a rigid pivotal shaft, a hammer loosely pivoted on the shaft of the safety-lever, a sear, a grip-lever coöperating with the sear, and a mainspring coöperating with the grip-lever and the hammer and exerting pressure through the hammer on the shaft of the safety-lever.

This specification signed and witnessed this 21st day of March, A. D. 1902.

JOHN M. BROWNING.

In presence of—

LOUISE ELDREDGE,
HENRY WILLIAMS.