(No Model.) 3 Sheets—Sheet 1.

M. E. BEASLEY, J. G. REHFUSS & G. M. NEWHALL.

BARREL SETTING-UP MACHINE.

No. 393,683. Patented Nov. 27, 1888.

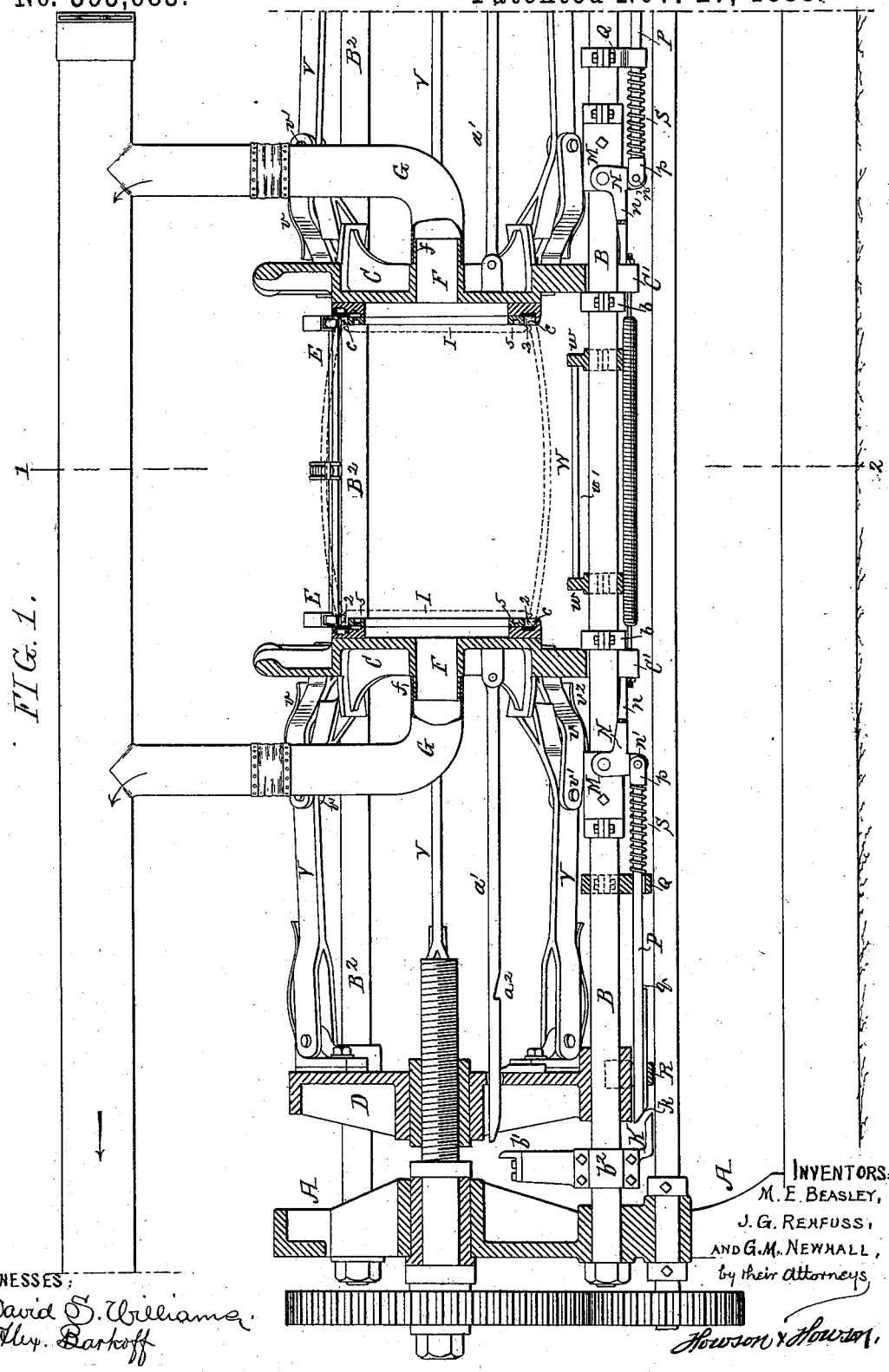

FIG. 1.

WITNESSES:
David S. Williams.
Thos. Barkoff

INVENTORS:
M. E. BEASLEY,
J. G. REHFUSS,
AND G. M. NEWHALL,
by their attorneys
Howson & Howson.

N. PETERS, Photo-Lithographer, Washington, D. C.

(No Model.) 3 Sheets—Sheet 2.

M. E. BEASLEY, J. G. REHFUSS & G. M. NEWHALL.

BARREL SETTING-UP MACHINE.

No. 393,683. Patented Nov. 27, 1888.

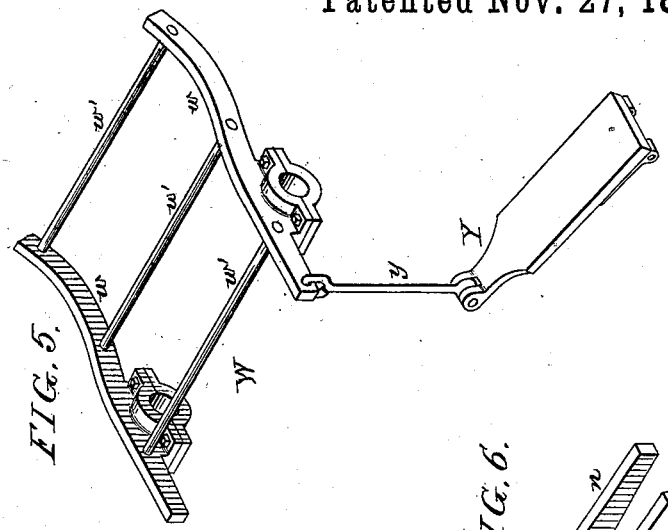

FIG. 5.

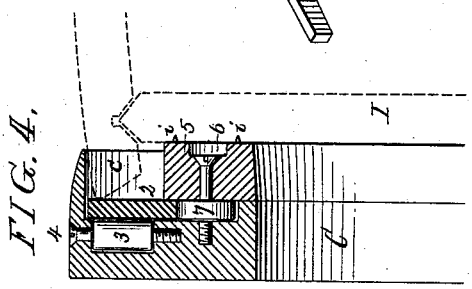

FIG. 4.

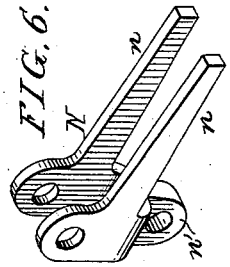

FIG. 6.

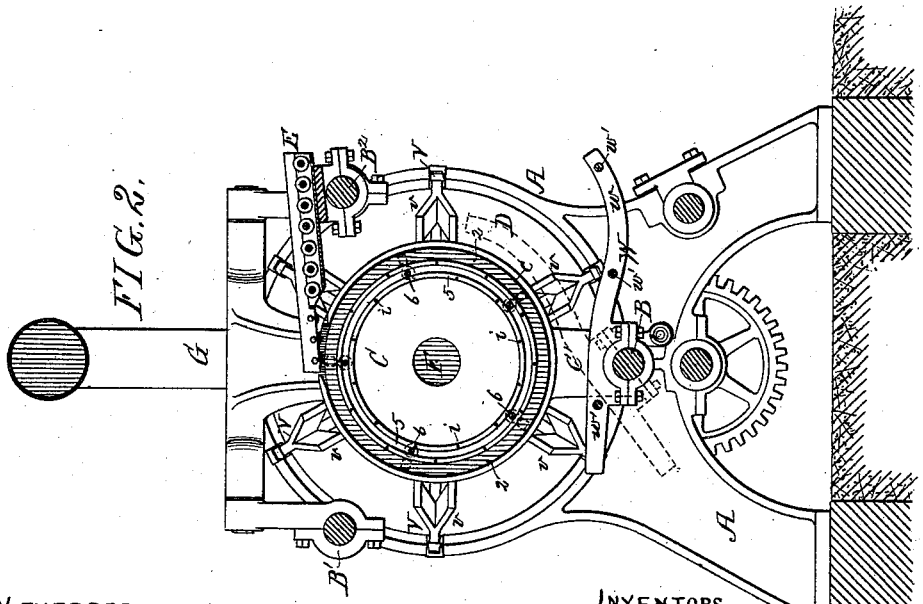

FIG. 2.

WITNESSES:
David S. Williams,
Aby. Barkoff.

INVENTORS:
M. E. BEASLEY,
J. G. REHFUSS &
G. M. NEWHALL,
by their Attorneys.
Howson & Howson

N. PETERS, Photo-Lithographer, Washington, D. C.

(No Model.) 3 Sheets—Sheet 3.

M. E. BEASLEY, J. G. REHFUSS & G. M. NEWHALL.

BARREL SETTING-UP MACHINE.

No. 393,683. Patented Nov. 27, 1888.

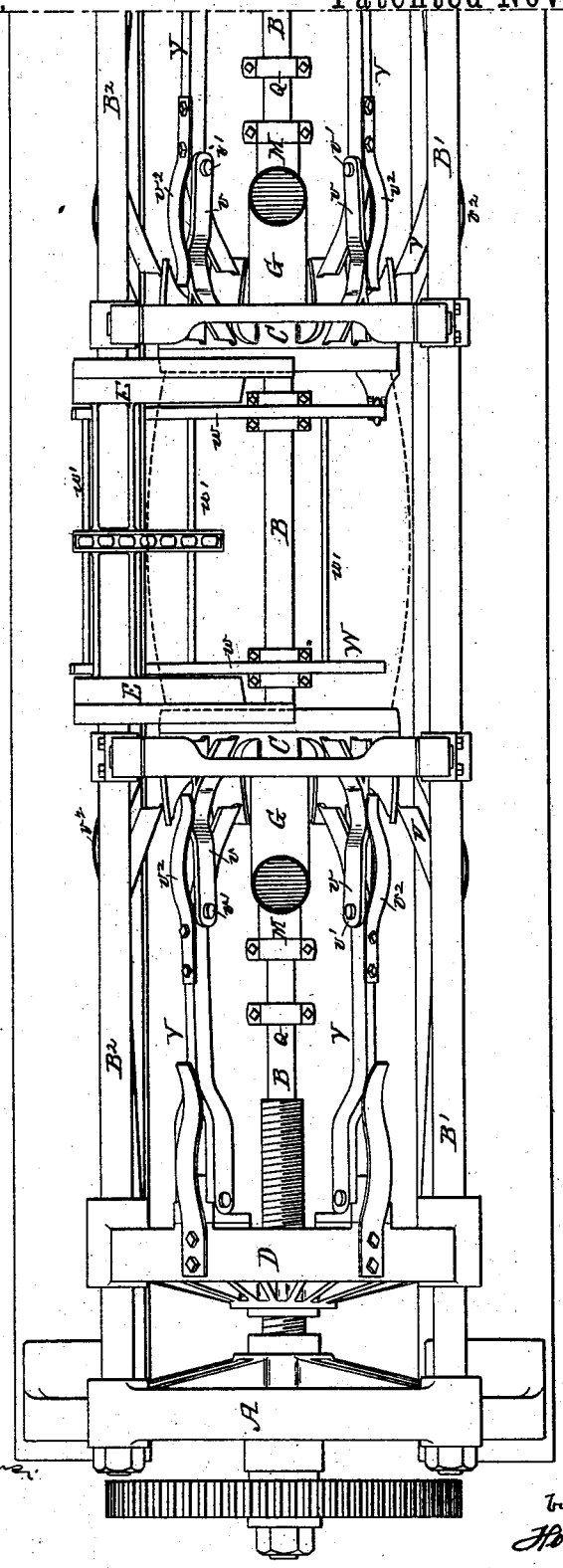

FIG. 3.

WITNESSES:
David S. Williams,
Thos. Barkoff.

INVENTORS:
M. E. BEASLEY,
J. G. REHFUSS &
G. M. NEWHALL,
by their Attorneys
Howson & Howson.

N. PETERS, Photo-Lithographer, Washington, D. C.

UNITED STATES PATENT OFFICE.

MARIA E. BEASLEY, JOHN GEORGE REHFUSS, AND GEORGE M. NEWHALL, OF PHILADELPHIA, PENNSYLVANIA, ASSIGNORS TO THE AMERICAN BARREL AND STAVE COMPANY, OF CAMDEN, NEW JERSEY.

BARREL-SETTING-UP MACHINE.

SPECIFICATION forming part of Letters Patent No. 393,683, dated November 27, 1888.

Application filed March 19, 1888. Serial No. 267,709. (No model.)

To all whom it may concern:

Be it known that we, MARIA E. BEASLEY, JOHN GEORGE REHFUSS, and GEORGE M. NEWHALL, all citizens of the United States, and residents of Philadelphia, Pennsylvania, have invented certain Improvements in Barrel-Setting-Up Machines, of which the following is a specification.

Our invention consists of certain improvements in the barrel-making or barrel-setting-up machinery for which application for Letters Patent was filed on the 24th day of January, 1887, Serial No. 225,328; and our present improvements comprise certain mechanism for allowing the free rotation of the staves in the heads, mechanism for automatically locking the stave-receiving heads in place and releasing them at the proper moment, mechanism for forcing the hoops upon the barrel, and devices for delivering the barrel when completed.

In the accompanying drawings, Figure 1 is a longitudinal section of sufficient of a barrel-setting-up machine to illustrate our invention. Fig. 2 is a transverse section on the line 1 2, Fig. 1. Fig. 3 is a plan view. Fig. 4 is an enlarged sectional view of part of one of the stave-receiving heads, and Figs. 5 and 6 are detached perspective views of parts of the machine.

We will not describe in detail the construction of the machine shown, and we have also omitted from the drawings a number of the details of the driving-gear, which are fully shown in the aforesaid application.

The fixed frame of the machine consists of two end frames, A, secured together by longitudinal bolts or rods B B′ B²—three in the present instance.

C C are the stave-receiving heads, pivoted to brackets on the rods B′ B², and D D are the hoop-driving heads, each actuated by a screw similar to that shown in the above-mentioned application, the head having a nut to which the screw is adapted, and said screw being driven in one direction to advance the head and in the opposite direction to retract it. Each head C has an annular groove, *c*, into which the staves are inserted from the feed-way E, and in each groove *c* is a loose ring, 2, (shown in Fig. 4,) and back of this ring are a series of anti-friction rollers, 3, mounted on suitable pins, 4. The ring is held in place by a second ring, 5, which overlaps the ring 2, and is secured to the permanent part of the head C by means of screws or bolts 6, which pass through and carry anti-friction rollers 7, the latter serving to support and prevent lateral play of the ring, so that it is kept at all times in a position concentric with the axis of the head.

When the staves are fed into the grooves *c*, their ends bear against the rings 2 in the grooves, so that the pressure is transmitted to the rings, and said rings move with the staves as the latter are fed around the heads, thus materially reducing the power necessary to feed the staves around the heads, owing to the anti-friction bearings of the rings 2. Friction-rollers alone may be used, against which the ends of the staves may bear, but these would have to be placed very close together; hence we prefer in all cases to use the ring 2.

The stave-receiving heads C have a central opening, F, and connected to a flange, *f*, around each opening is a pipe, G, which communicates with an exhaust-pipe, H, so that a partial vacuum may be maintained in the pipes G.

As shown by dotted lines in Fig. 4, the heads I of the barrel are placed in position on the rings 5 of the stave-receiving heads C, so that the partial vacuum created within the rings will serve to hold the heads of the barrel in position upon the stave-receiving heads while the staves are being fed around the same, pins *i*, Fig. 4, preventing the heads I from turning. This special construction is shown and described more fully, and is claimed, in an application for a patent filed March 12, 1888, Serial No. 267,010.

We have found that owing to the difference in the force exerted upon the barrel by the opposite hoop-drivers when driving on the hoops a spring for holding the two stave-receiving heads together is not practicable at all times. For instance, if a barrel happens to be a trifle larger at one end than the other the hoop-drivers meet with more resistance at said larger end and consequently the barrel will be forced longitudinally by said drivers, the spring will

be stretched, and the barrel moved out of place. We have therefore provided an automatic lock for the heads, which can only be thrown out at a certain portion of the return-stroke of the hoop-drivers.

On the lower tie-rod, B, we secure sleeves M, to which are pivoted levers N, each having two arms, *n n*, as shown in the perspective view, Fig. 6, these arms bearing normally against extensions C′ of the heads C. Arms *n′* of the levers N are connected to rods P, which pass through bearings Q, bolted to the tie-rod B, and also through bearings R, bolted to the hoop-driving heads D. On the rods P are stiff springs S, which bear against yokes *p* on the rods, while the opposite ends of the springs are in contact with the stationary bearings Q, so that the springs will at all times tend to keep the arms *n* of the levers N in the position shown in Fig. 1. Each rod P has an offset or catch, *q*, and is tapered at its outer end, *k*, which is adapted to ride upon an inclined plane, K, secured to a bracket, b^2, bolted to the rod B.

The heads C C are drawn back in precisely the same manner as described in the aforesaid application, a guided rod, *a′*, being pivoted to each head and passing through an orifice in the head D, and each rod is notched at a^2 to engage with a projection on the head when the latter is advanced.

The end of each rod is tapered, and when the head D on its retraction draws the rod back to a certain point the tapered portion of the rod comes in contact with a shoe, *b′*, on the bracket b^2 and is lifted thereby, thus releasing the head C and allowing it to swing by gravity back into its normal position. Previous to the engagement of the head D with the notch a^2, however, the bearing R, engaged with the notch *q* on the rod P, so that draft was imparted to said rod and to the arm *n′* of the lever N, the arm *n* of the latter being thus swung down clear of the head C before the rod *a′* is operated upon to withdraw said head C, and as soon as the head D has traveled so far rearward as to effect a partial retraction of the head C the end of the bar P is lifted by the inclined plane K, so that said bar is released from the bearing R, thus permitting the spring S to act on the lever N and swing the arm *n* of the same up into position to engage with the head C as soon as the latter is released from the control of the head D and swung back into its normal position, a sleeve, *b*, on the tie-rod B preventing undue forward movement of the head.

Adapted to the lower tie-rod, B, is a cradle, W, Figs. 2 and 5, formed of two levers, *w w*, tied together by rods *w′*. The long arms of these levers we prefer to curve somewhat in the shape of the barrel. One of the levers *w* is connected to a treadle, Y, by a link, *y*, so that when the barrel has been set up and hooped, and previous to the withdrawal of the stave-receiving heads, the cradle may be moved to the position shown by dotted lines in Fig. 2, the attendant pressing his foot upon the treadle to effect this movement. As the barrel falls, therefore, the shipper held in this position will guide the barrel in the proper direction—that is, outward in front of the machine.

Each of the hoop-drivers is provided with a supplemental driver, *v*, pivoted at *v′* to the main driver V, and provided with a spring, v^2, which is secured to the driver V and bears against the supplemental driver, tending to force it down against the staves when it is driving a hoop into place.

By this construction two hoops can be driven on each end of the barrel simultaneously. The two hoops are placed upon the heads C C previous to the feeding of the staves into the machine. When enough staves for a barrel have been fed into the machine, the bilge-hoops are drawn from the heads C onto the ends of the barrel by hand, so that when the hoop-drivers are fed toward the barrel the drivers *v* act first on the bilge-hoops, and when the latter are fairly started the drivers V commence to force on the other hoops. When both hoops have been forced on sufficiently, the movement of the drivers is reversed and they are retracted to their normal positions.

We claim as our invention—

1. The combination of the stave-receiving head having an annular groove into which the staves are fed, with an anti-friction surface forming the base of the groove and providing a bearing for the ends of the staves, all substantially as described.

2. The combination of the stave-receiving head having a stave-receiving groove, with a ring free to turn therein and against which the ends of the staves bear while they are being fed around the heads of the barrel, all substantially as specified.

3. The combination of the stave-receiving head having an annular groove, a ring therein, and anti-friction rollers at the rear of said ring, all substantially as and for the purpose set forth.

4. The combination of the stave-receiving head having an annular groove therein, a bearing-ring for the ends of the staves, anti-friction rollers forming a backing for said ring, and rollers forming an internal peripheral bearing for the ring, all substantially as specified.

5. The combination of the stave-receiving head having an annular groove, the bearing-ring therein, and a ring overlapping said bearing-ring and adapted to hold it in place in the groove, substantially as described.

6. The combination, in a barrel-setting-up machine, of a stave-receiving head, a hoop-driving head, a lever bearing upon the stave-receiving head and serving to lock the same in operative position, and a rod or bar connected to said locking-lever and acted upon by the hoop-driving head on its rearward movement, substantially as described.

7. The combination of a stave-receiving

head, a hoop-driving head, a lever bearing upon the stave-receiving head and serving to lock the same in operative position, a rod or bar connected to the lever and engaging with the hoop-driving head, and a spring for restoring the locking-lever to its normal position when the operating-rod is released from the control of the hoop-driving head, all substantially as specified.

8. The combination of a stave-receiving head, a hoop-driving head, a lever for locking said stave-receiving head in its operative position, rods connected to the locking-lever and to the stave-receiving head and engaging successively with the hoop-driving head on its backward movement, whereby the stave-receiving head is first unlocked and then retracted, all substantially as specified.

9. The combination of the stave-receiving head, the hoop-driving head, a lever engaging with said stave-receiving head and serving to lock the same in operative position, a rod connected to said lever and engaging with the hoop-driving head on its backward movement, a trip-plate for releasing the rod from the control of the hoop-driving head, and a spring for restoring the locking-lever to its normal position on the release of its operating-rod, all substantially as specified.

10. The combination of the stave-receiving head, the hoop-driving head, a lever engaging with the stave-receiving head and locking the same in operative position, rods connected to said locking-lever and to the stave-receiving head and engaging successively with the hoop driving head as the latter is retracted, and trippers acting successively first upon the rod of the lever and then upon the rod of the stave-receiving head to release them from the control of the hoop-driving head, all substantially as specified.

11. The combination, in a barrel-setting-up machine, of the stave-receiving heads, the hoop-driving heads, a cradle located between the stave-receiving heads and pivoted to the frame of the machine, and a treadle connected to said cradle, whereby on depressing the treadle the cradle is adjusted to form an inclined plane on which the barrel can roll from the machine when released from the stave-receiving head, all substantially as specified.

In testimony whereof we have signed our names to this specification in the presence of two subscribing witnesses.

MARIA E. BEASLEY.
JOHN GEORGE REHFUSS.
GEORGE M. NEWHALL.

Witnesses:
WILLIAM D. CONNER,
HARRY SMITH.