Feb. 19, 1952 A. WAGNER 2,586,583

FOLDABLE REFLECTOR

Filed April 5, 1950

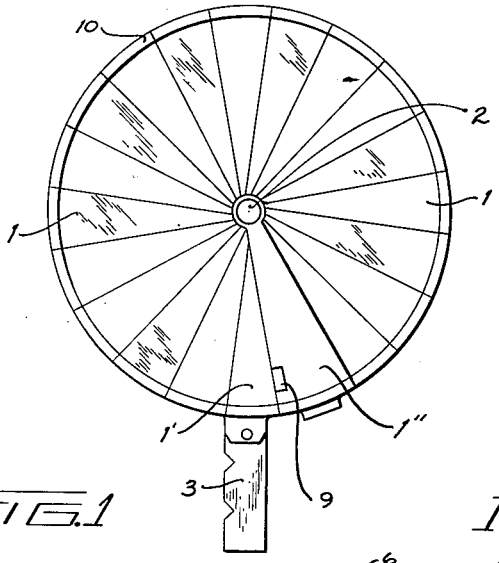

FIG. 1

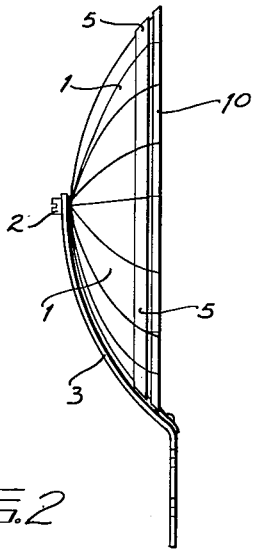

FIG. 2

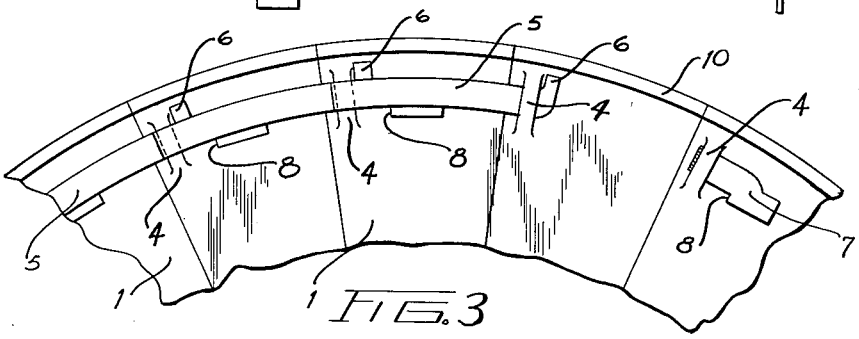

FIG. 3

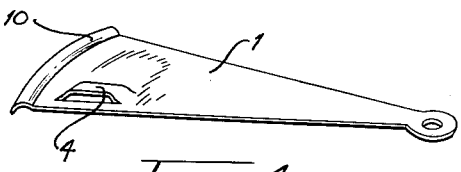

FIG. 4B

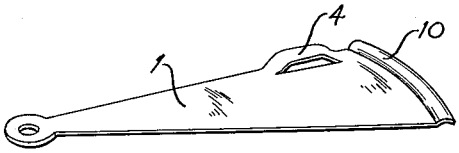

FIG. 4A

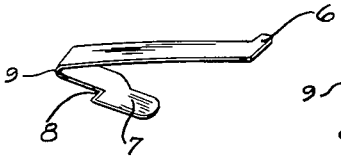

FIG. 5B

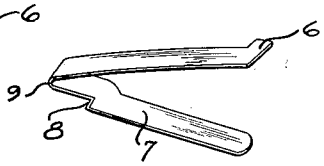

FIG. 5A

INVENTOR.
ADAM WAGNER
BY Fred A. Klein
ATTORNEY

Patented Feb. 19, 1952

2,586,583

UNITED STATES PATENT OFFICE

2,586,583

FOLDABLE REFLECTOR

Adam Wagner, Wetzlar, Germany, assignor to Ernst Leitz G. m. b. H., Wetzlar, Germany, a German corporation

Application April 5, 1950, Serial No. 154,018
In Germany September 16, 1949

3 Claims. (Cl. 240—103)

1

This invention relates to a foldable reflector, for instance for photographic purposes.

The reflector according to this invention comprises sectoral blades, which can be rocked or rotated on a common axis, and which, when opened like a fan, can be held in position by means provided near their circumference.

Foldable photographic reflectors, preferably of metallized paper, which may be fastened to the flash bulb are known. Due to their structure and the material from which they are made, they have a short life, are not very stable, and lose their shape under their own weight.

Further, separable metal reflectors have been proposed for photographic purposes, which consist of a flattened cone, sometimes composed of several segments. To be used as a reflector, a truncated cone is formed from the flattened cone, and the funnel-shaped structure is fastened to the lamp.

Rigid, cup-shaped reflectors having a plurality of sectoral stampings are also known, the sectoral arrangement being provided in view of the resulting desirable light distribution.

To obviate the disadvantages inherent in the prior art structures, the reflector according to this invention is similar to a foldable fan and comprises separate adjustably connected sectoral blades, the separate blades having loops arranged close to their circumference and being connectable by means of a coupling band or strip passing through the loops and adapted to limit the relative movement of the blades. Alternatively, there are provided individual coupling members, such as leaf springs, having hook-shaped extensions attached to each blade near the circumference of the fan and being connected to the loop of the associated blade preferably by means of a fold. Further the leaf springs are movably connected to the loops of the blades along a path which is limited by a stop in the direction in which the fan opens. The fan-like opening movement of the blades is also limited by stops on the leaf springs guided in the loops. The leaf springs may be exchangeably attached to the loops. The separate blades are provided with guiding and reinforcing grooves, preferably near the circumference of the fan; they may be made from metal foil with a surface having a reflecting, grained reflecting, patterned, or any other optical characteristic.

Further objects and advantages of the present invention will be apparent in conjunction with the following description and drawings in which:

Fig. 1 is a front view of a cup-shaped fan reflector according to the invention in its opened position;

2

Fig. 2 is a side view of the reflector shown in Fig. 1;

Fig. 3 is a plane view of the outside portions of a plurality of blades in opened position also showing the associated connecting members;

Fig. 4A is a perspective view of a blade according to one embodiment of this invention;

Fig. 4B is a perspective view of a blade according to another embodiment of this invention;

Fig. 5A is a perspective view of a coupling member according to one embodiment of this invention; and

Fig. 5B is a perspective view of a coupling member according to another embodiment of this invention.

Referring to the figures, the reflector consists of essentially sectoral blades 1, stacked on a common axle 2 and rotatable thereon. The axle may be supported by a handle 3. Loops 4 are provided near the circumference of the blades 1, preferably by stamping. Spring leaves 5 are fastened to these loops 4, and hook-shaped extensions 6 on spring leaves 5 in cooperation with the loops 4 restrict the relative angular displacement between the blades to a maximum value. The leaf-springs 5 are hooked to loops 4 by means of a specially shaped portion 7 obtained by folding the spring as at 9.

A stop 8 on the one side and the fold 9 on the other side limit the movement of each leaf spring 5 relative to the associated loop 4. This relative movement is necessary to permit complete superposition of the separate blades in the folded position of the fan. The shape of the folded-over portion 7 permits insertion and the attachment of the stamped and folded leaf spring 5 to the loop 4.

If the loop 4 is arranged at the edge of the blade, as in Fig. 4A, the folded-over portion 7 is, preferably, as long as the spring leaf 5, as shown in Fig. 5A, so that it extends below loop 4 of the adjacent blade. This arrangement prevent any entanglement of the blades with the folded-over portions during the folding of the fan. If the loop 4 is arranged at a distance from the edge of the blade 1, illustrated in Fig. 4B, the folded-over portion 7 may be shorter, as in Fig. 5B, since in this case the edge of the blade is forced towards the leaf spring 5 thereby preventing any entanglement. This loop arrangement also permits the use of a continuous coupling band, where the loops are attached to the band at the correct distance of the blades by clamping or by seams.

In the assembling process, each blade 1 is provided with a leaf spring 5 by insertion of the folded-over portion 7 into the loop 4 and the hook-shaped extension of each leaf spring 5 is slid through the loop 4 of the adjacent blade 1, thereby establishing the connection between two adjacent blades. The blades 1 are then stacked in completely superposed positions and attached to the common axle 2.

If a handle 3 is provided, the first blade 1′ may be rigidly connected thereto. This blade 1′ carries a connecting hook, not shown, while the last blade 1″ has a stamped eyelet 9 adapted to engage the hook on the first blade 1′ for connecting the two blades. Any other means for securing the last blade to the first blade may replace the hook and eyelet combination.

Depending on the number of the blades used, a disc or cup-shaped fan is formed in the opened and connected position. The blades may be made of metal or any other stiff substance and, according to the intended use, provided with a reflecting, grained reflecting, patterned, or otherwise optically characterized surface.

For reinforcement and mutual guiding of the blades, the latter are preferably provided near their circumference with grooves 10. Reinforcements may also extend radially in each blade. Further, a large opening may replace the axle 2, all blades being mounted for rotation around the opening which may permit attachment of the fan reflector directly to the socket or lamp holder.

What is claimed is:

1. In a foldable reflector comprising a plurality of sectoral blades rotatably mounted on a common pivot and substantially radial loops arranged near the circumference of each blade: a circumferentially arranged coupling member longitudinally movably mounted on each of said loops, stop means arranged on each coupling member and engageable by the loop on which the coupling member is mounted to limit the longitudinal motion in both directions between the loop and the coupling member, and a hook-shaped extension on each coupling member, said hook-shaped extension extending through the loop of the blade adjacent to the one on which it is mounted and engageable by said loop of the adjacent blade to limit the angular relative movement of the blades about the common pivot, said hook-shaped extensions extending through each loop immediately adjacent to the blades, and said coupling members being mounted on said loops in superposed relation to the hook-shaped extensions.

2. In a foldable reflector comprising a plurality of sectoral blades rotatably mounted on a common pivot and substantially radial loops arranged near the circumference of each blade: a folded leaf spring circumferentially movably mounted on each of said loops, one part of the folded leaf spring extending below the loop and the other part above the loop, a shoulder on the leaf spring part extending below the loop, said shoulder and the fold of the leaf spring being engageable by opposite sides of the loop on which the leaf spring is mounted to limit the circumferential motion in both directions between the loop and the leaf spring, and a hooked end on the leaf spring part extending above the loop, said hooked end extending through the loop of the blade adjacent to the one on which it is mounted and engageable by said loop of the adjacent blade to limit the angular relative movement of the blades about the common pivot, said hooked ends extending through each loop immediately adjacent to the blades, and said folded leaf springs being mounted on said loops along their internal folding line and in superposed relation to the hooked ends.

3. The foldable reflector as defined in claim 2, wherein the first and the last of said blades are provided with a hook and eyelet, respectively, to connect the two blades when the reflector is unfolded and the first and last blades are adjacent each other.

ADAM WAGNER.

REFERENCES CITED

The following references are of record in the file of this patent:

UNITED STATES PATENTS

Number	Name	Date
1,148,520	Maun	Aug. 3, 1915
1,813,102	Vogel	July 7, 1931
2,513,961	Ostrom	July 4, 1950