US00D926080S

(12) United States Design Patent

Von Holzhausen et al.

(10) Patent No.: US D926,080 S
(45) Date of Patent: ** Jul. 27, 2021

(54) **VEHICLE**

(71) Applicant: **TESLA, INC.**, Palo Alto, CA (US)

(72) Inventors: **Franz Von Holzhausen**, Malibu, CA (US); **David Tadashi Imai**, Los Angeles, CA (US); **Wootak Kim**, Anaheim, CA (US); **Bernard G. Lee**, Aliso Viejo, CA (US)

(73) Assignee: **Tesla, Inc.**, Palo Alto, CA (US)

(**) Term: **15 Years**

(21) Appl. No.: **29/683,477**

(22) Filed: **Mar. 13, 2019**

(51) **LOC (13) Cl.** **12-08**

(52) **U.S. Cl.**
USPC **D12/91**

(58) **Field of Classification Search**
USPC D12/86, 90–92, 88, 164; D21/424, 433, D21/434; 296/181.1–181.5, 183.1
CPC B62D 25/00; B62D 25/06; B62D 33/00; B62D 35/00
See application file for complete search history.

(56) **References Cited**

U.S. PATENT DOCUMENTS

D781,751 S * 3/2017 Giolito D12/91
D790,403 S * 6/2017 Lichte D12/92
D797,604 S * 9/2017 Isomura D12/92
D804,356 S * 12/2017 Oho D12/91
D809,971 S * 2/2018 Lee D12/92
D873,177 S * 1/2020 Xu D12/91

* cited by examiner

Primary Examiner — Melody N Brown
(74) *Attorney, Agent, or Firm* — Knobbe, Martens, Olson & Bear, LLP

(57) **CLAIM**

The ornamental design for a vehicle, as shown and described.

DESCRIPTION

FIG. **1** is a top, front and left side perspective view of a vehicle showing our new design;
FIG. **2** is a front elevational view thereof;
FIG. **3** is a rear elevational view thereof;
FIG. **4** is a left side elevational view thereof;
FIG. **5** is a right side elevational view thereof; and,
FIG. **6** is a top plan view thereof.
The portions of the vehicle shown in broken lines throughout the drawing views are for illustrative and environmental purposes that form no part of the claimed design.

1 Claim, 6 Drawing Sheets

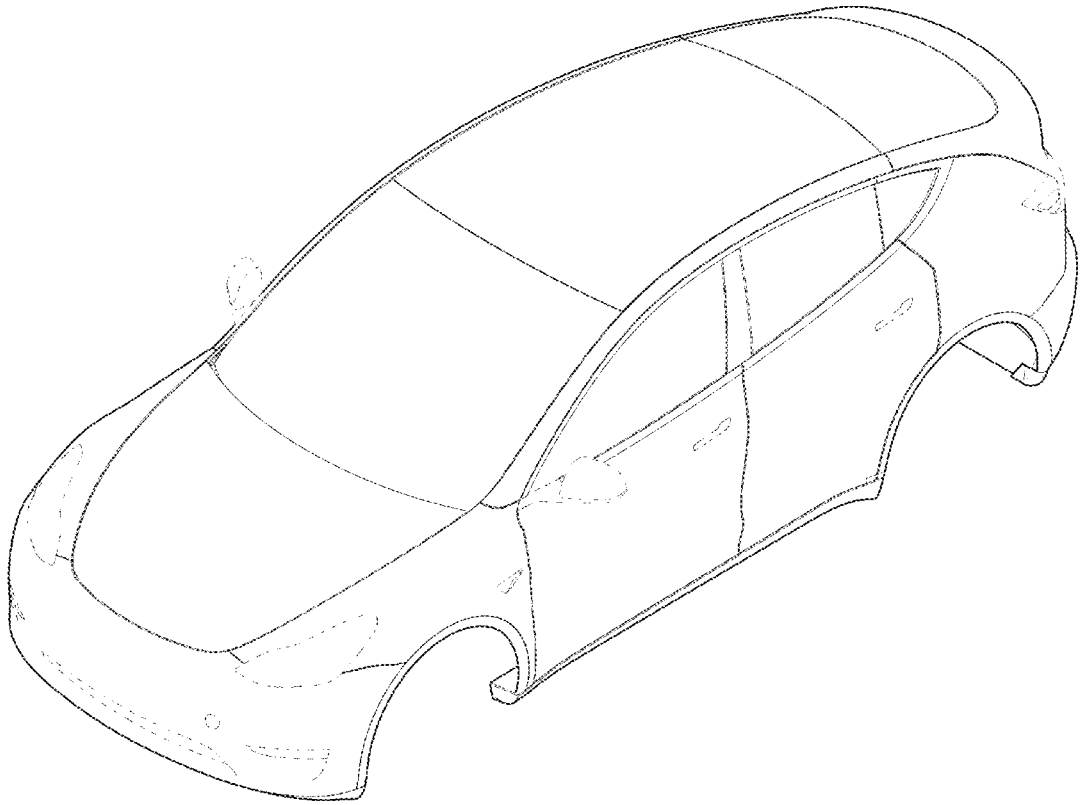

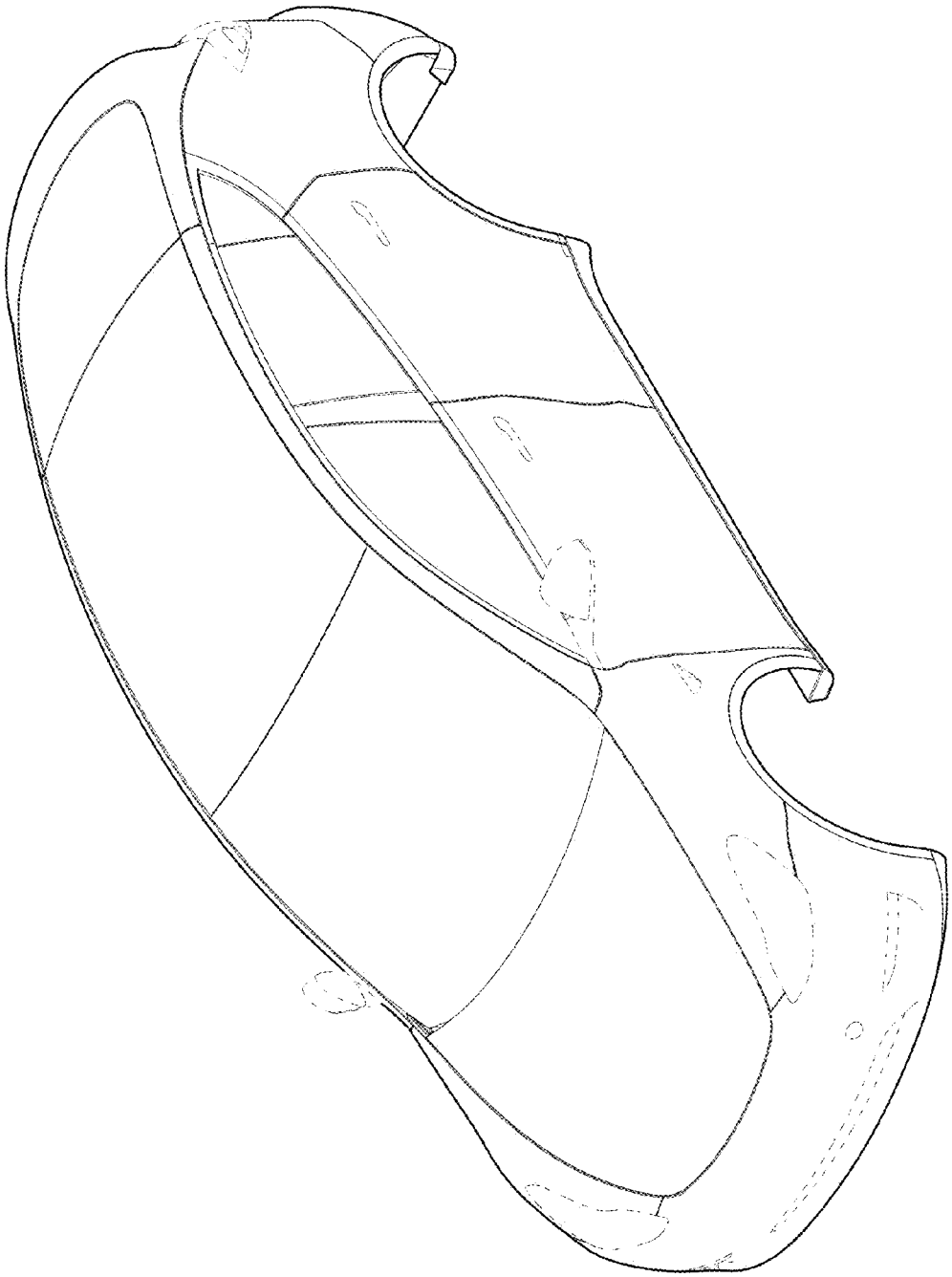

FIG. 1

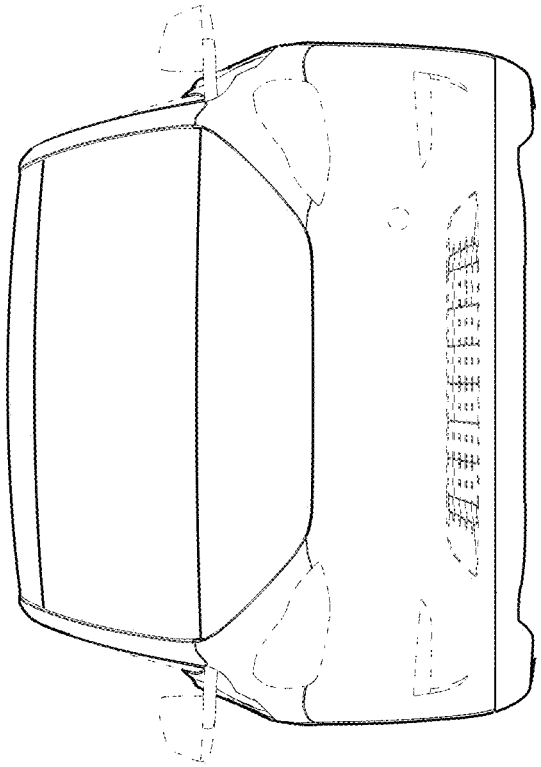

FIG. 2

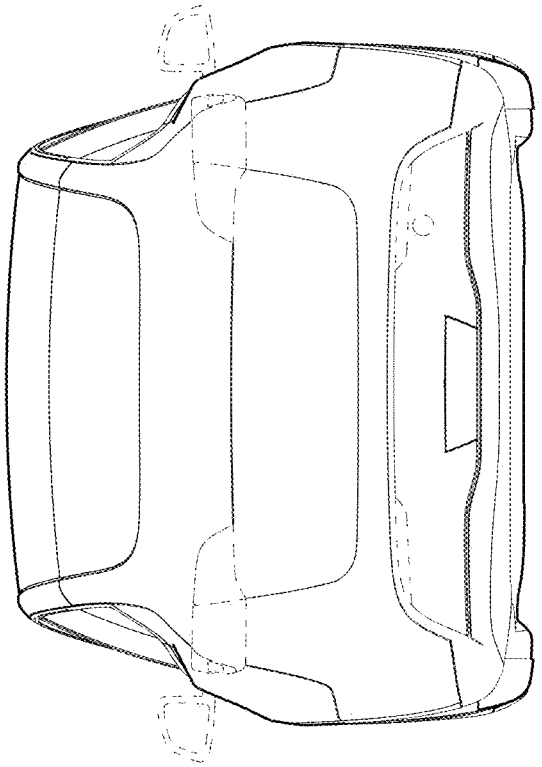

FIG. 3

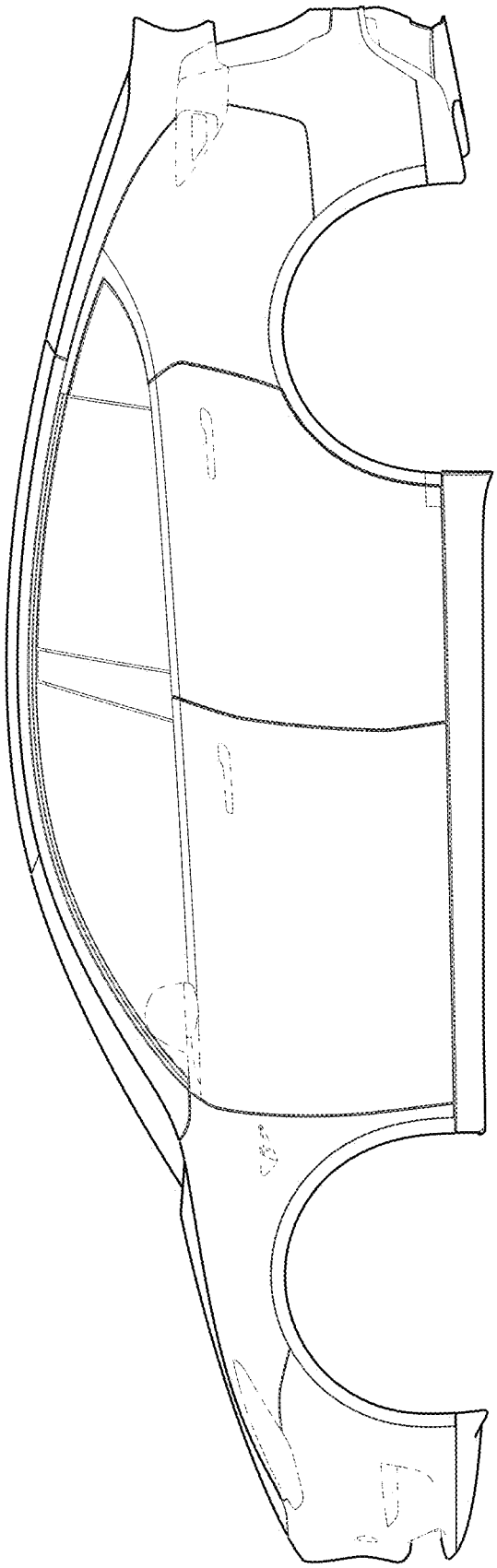

FIG. 4

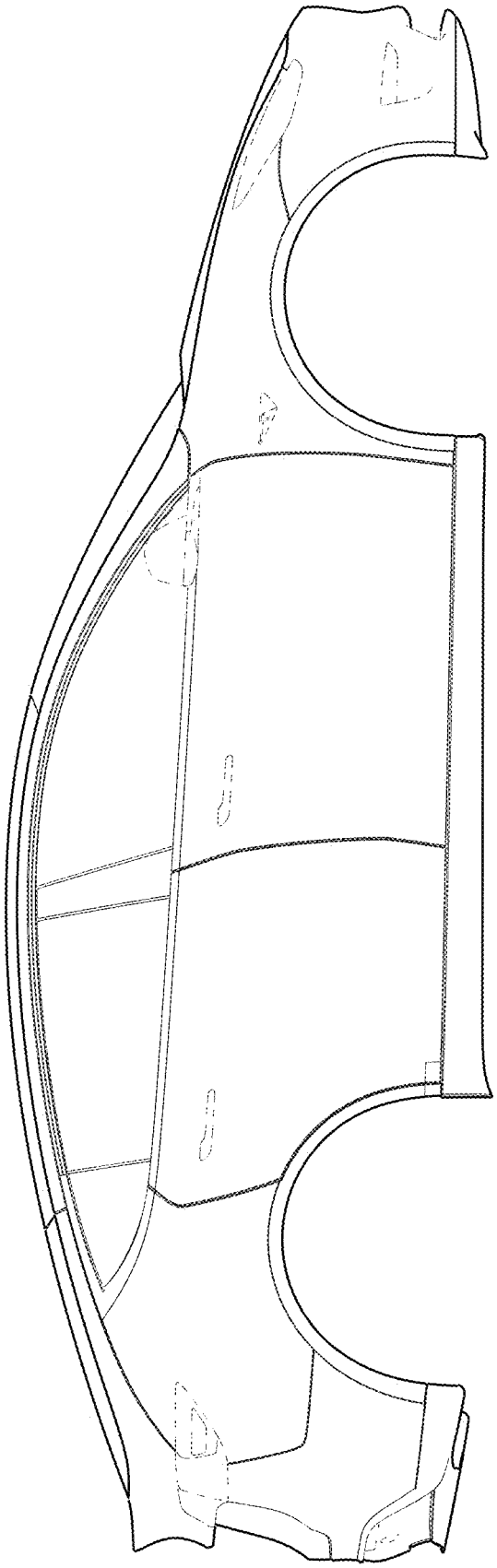

FIG. 5

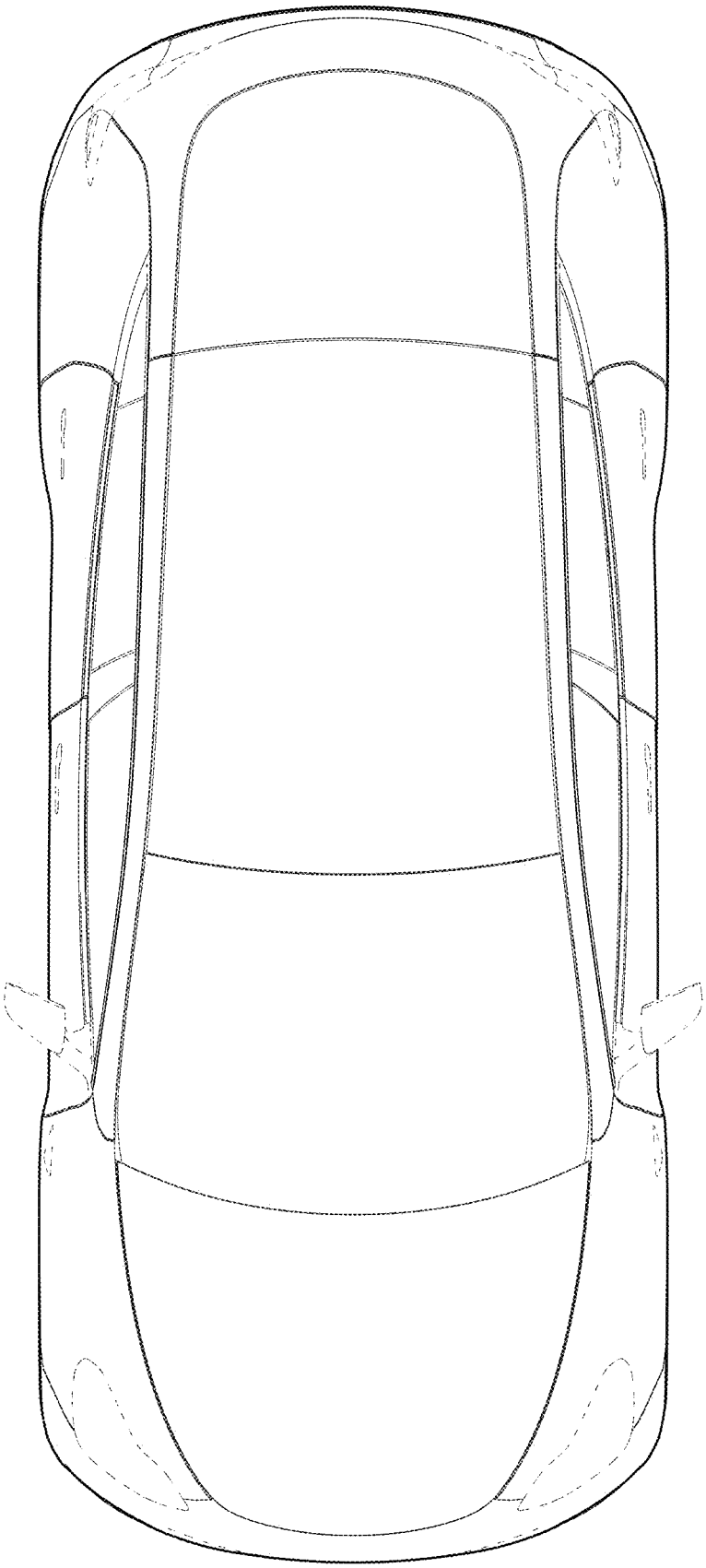

FIG. 6