US00D886679S

(12) United States Design Patent

Hellwig et al.

(10) Patent No.: US D886,679 S
(45) Date of Patent: ** Jun. 9, 2020

(54) **VEHICLE, TOY, AND/OR REPLICAS THEREOF**

(71) Applicant: **Daimler AG**, Stuttgart (DE)

(72) Inventors: **Volker Hellwig**, Stuttgart (DE); **Jean-Francois Huet**, Auenwald (DE); **Markus Ungerer**, Steinheim an der Murr (DE)

(73) Assignee: **Daimler AG**, Stuttgart (DE)

(**) Term: **15 Years**

(21) Appl. No.: **29/690,411**

(22) Filed: **May 8, 2019**

(30) **Foreign Application Priority Data**

Nov. 9, 2018 (DE) 40 2018 203 809

(51) **LOC (12) Cl.** **12-08**

(52) **U.S. Cl.**
USPC **D12/91**

(58) **Field of Classification Search**
USPC D12/86, 90–92; D21/424, 433, 434; 296/181.1–181.5, 183.1
CPC B62D 25/00; B62D 25/06; B62D 33/00; B62D 35/00
See application file for complete search history.

(56) **References Cited**

U.S. PATENT DOCUMENTS

D813,726 S * 3/2018 Tanghe D12/91
D813,727 S * 3/2018 Beermann D12/92
D821,919 S * 7/2018 Simm D12/91
D825,383 S * 8/2018 Luk D12/91
D825,390 S * 8/2018 Al Attar D12/92
D826,783 S * 8/2018 Badstuebner D12/92
D827,497 S * 9/2018 Frei D12/91
D827,514 S * 9/2018 Badstuebner D12/164
D831,540 S * 10/2018 Buckingham D12/92
D837,692 S * 1/2019 Badstuebner D12/91
D862,287 S * 10/2019 Badstuebner D12/91
D873,715 S * 1/2020 Badstuebner D12/91

* cited by examiner

Primary Examiner — Melody N Brown
(74) *Attorney, Agent, or Firm* — Crowell & Moring LLP

(57) **CLAIM**

The ornamental design for a vehicle, toy, and/or replicas thereof, as shown and described.

DESCRIPTION

FIG. **1** is a left, front perspective view of a vehicle, toy, and/or replicas thereof according to the design;
FIG. **2** is a left, rear perspective view thereof;
FIG. **3** is a front view thereof;
FIG. **4** is a rear view thereof; and,
FIG. **5** is a left side view thereof.
The broken lines in the drawings illustrate environmental subject matter only and form no part of the claimed design.

1 Claim, 5 Drawing Sheets

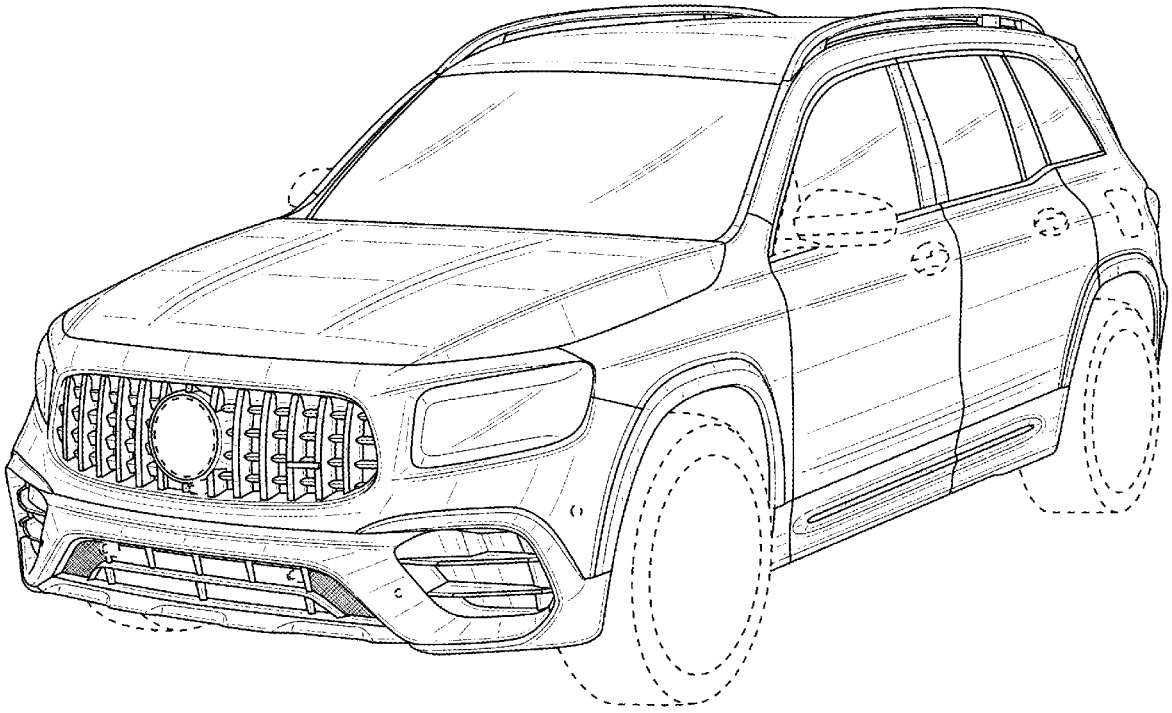

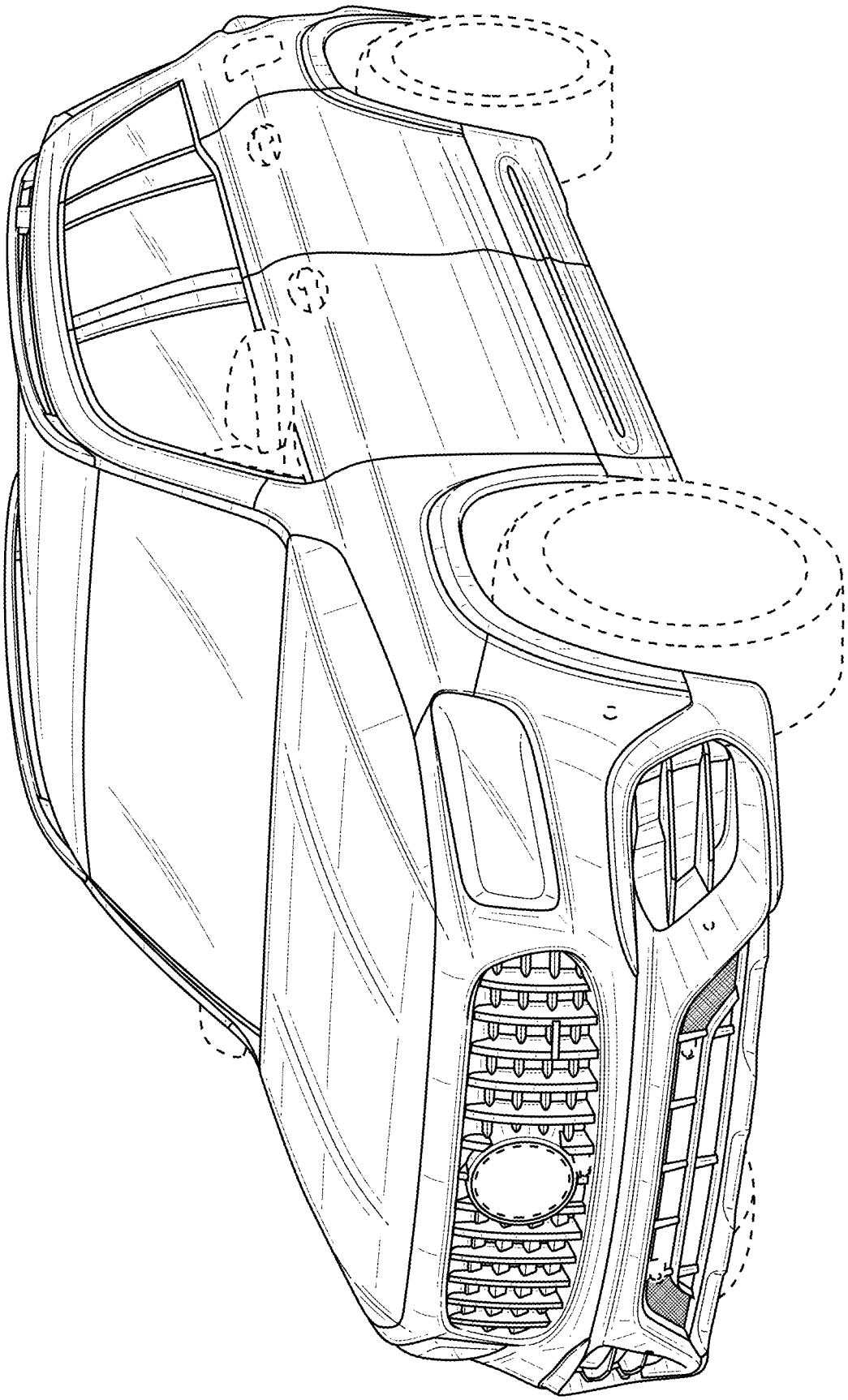

FIG. 1

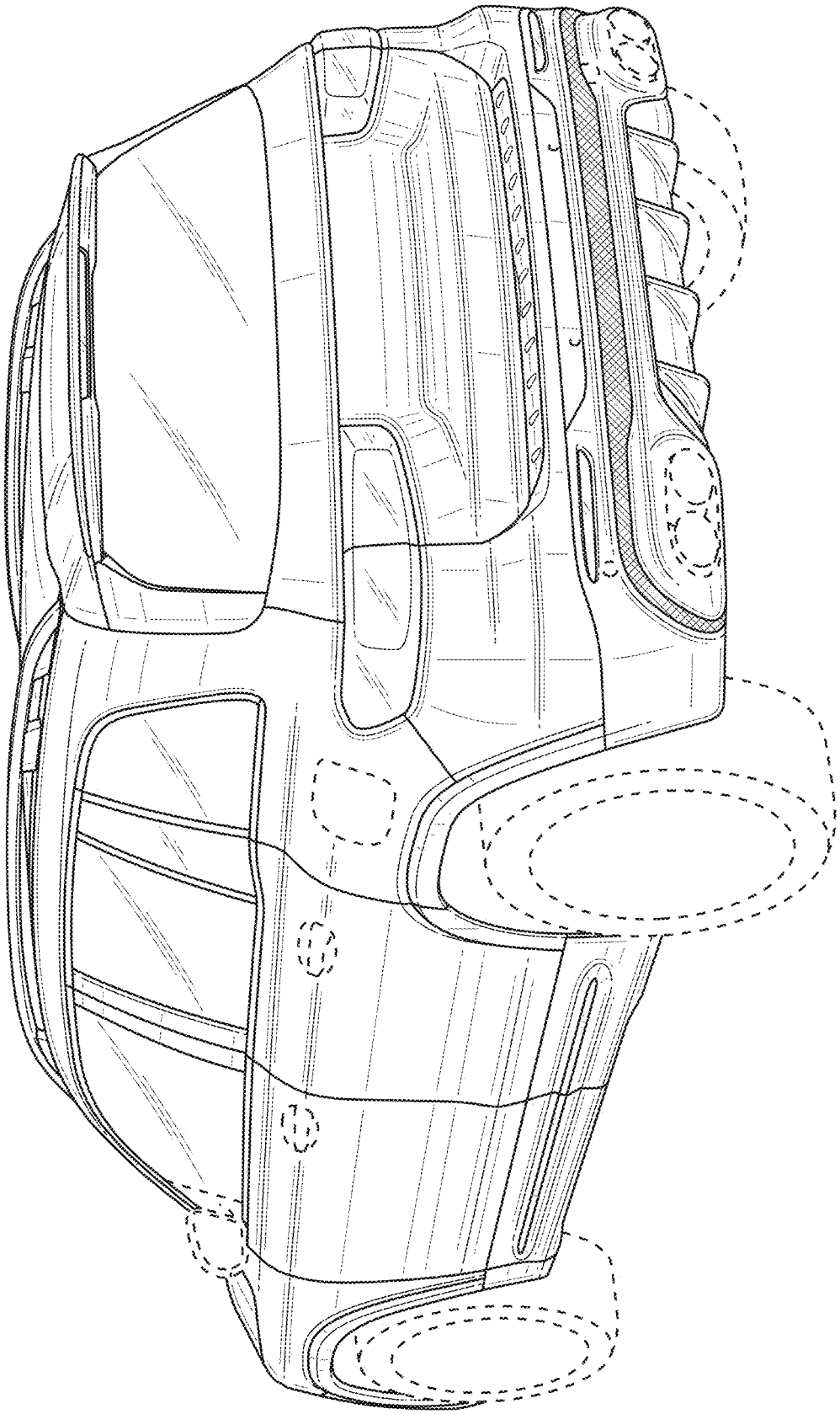

FIG. 2

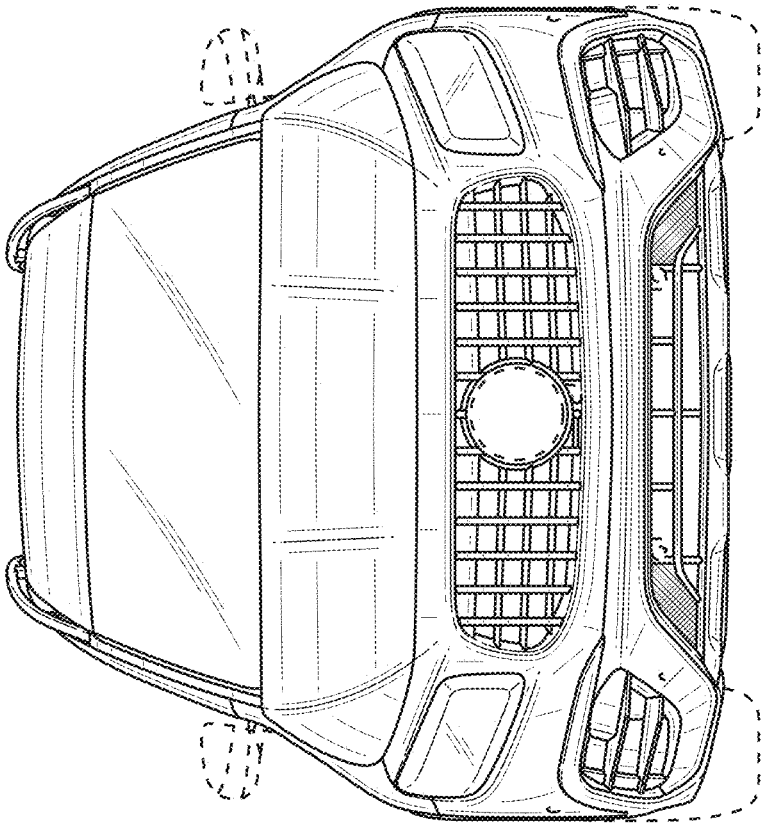

FIG. 3

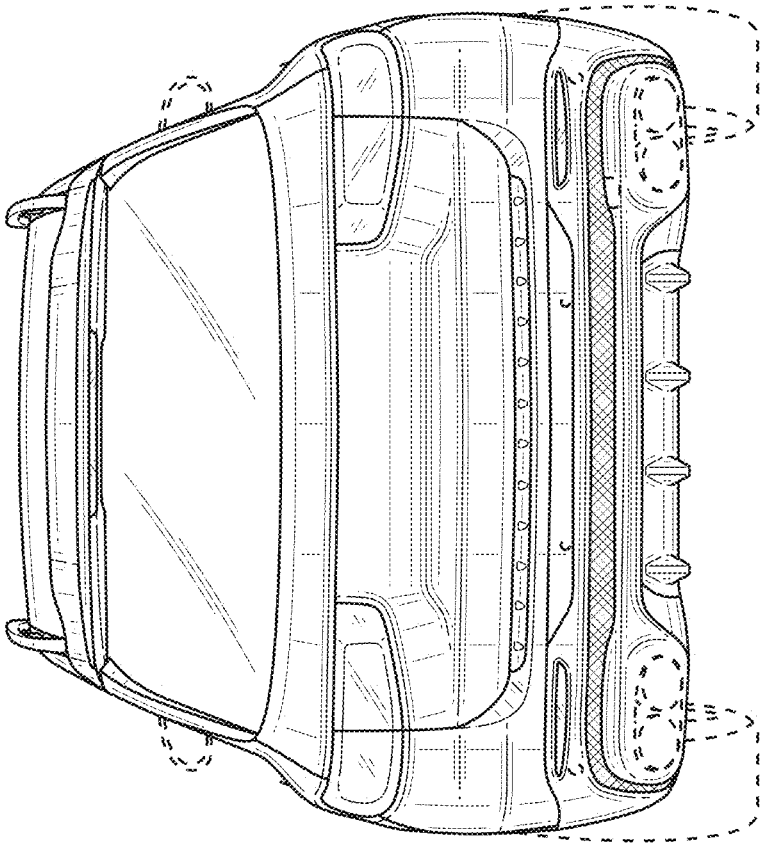

FIG. 4

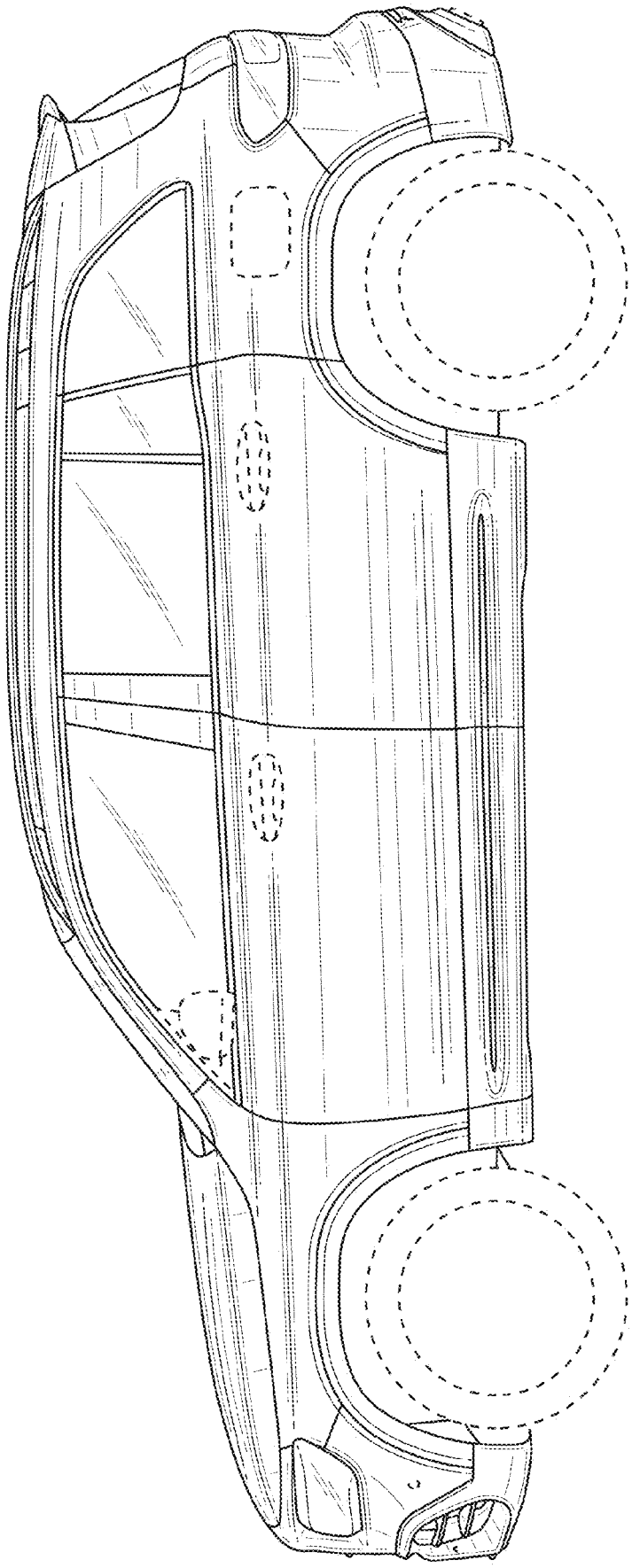

FIG. 5