Dec. 26, 1961 R. L. CARLIN 3,014,477

HYPNOTIC INDUCER

Filed Aug. 16, 1956 2 Sheets-Sheet 1

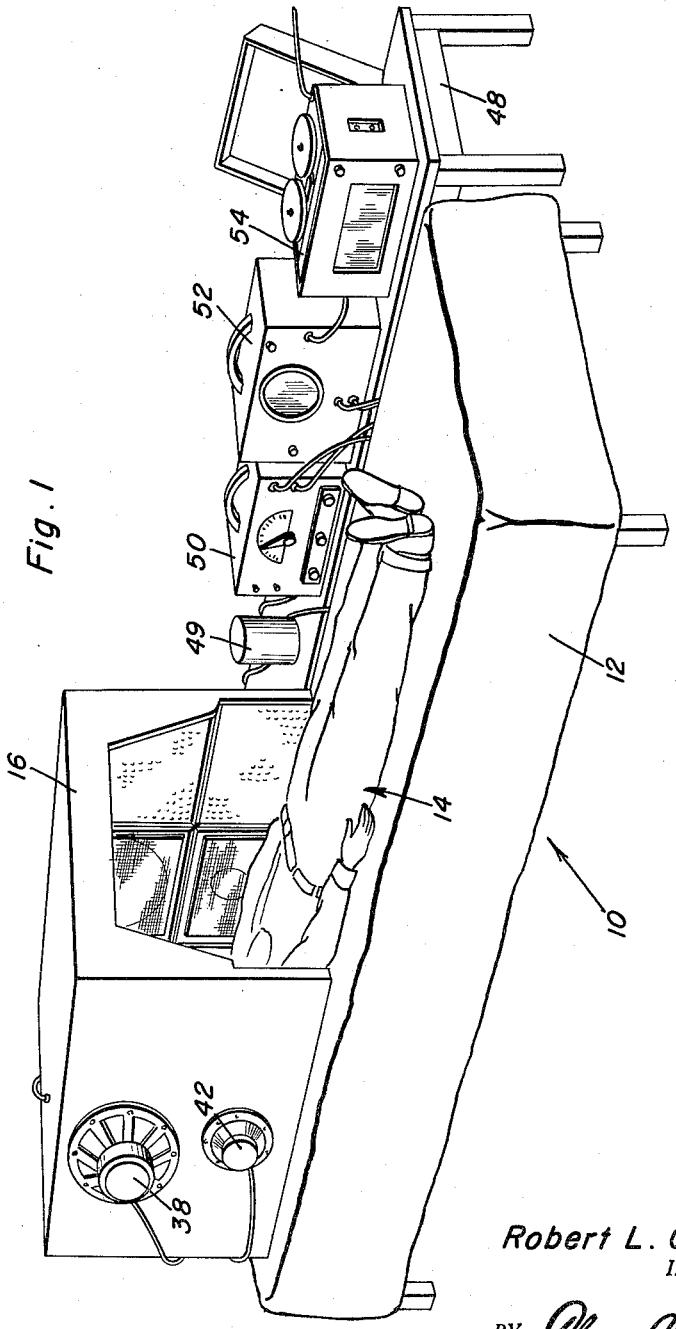

Fig. 1

Robert L. Carlin
INVENTOR.

BY Clarence A. O'Brien and Harvey B. Jacobson
Attorneys

HYPNOTIC INDUCER

Filed Aug. 16, 1956 2 Sheets-Sheet 2

Fig. 2

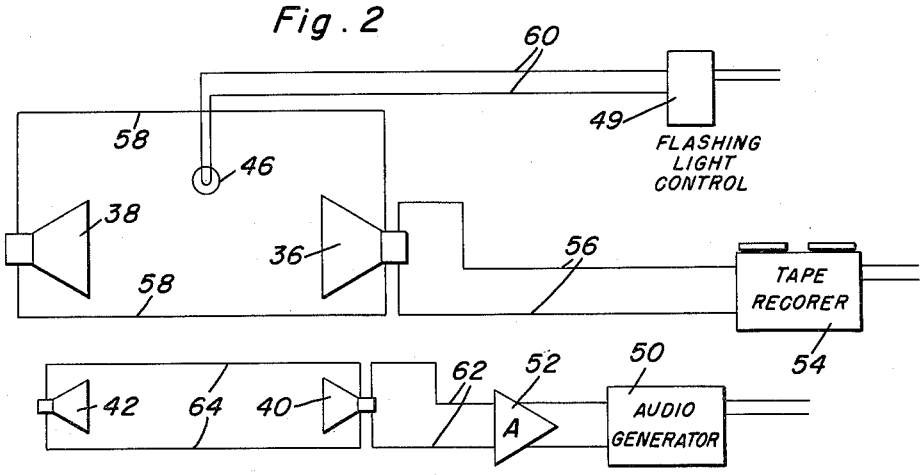

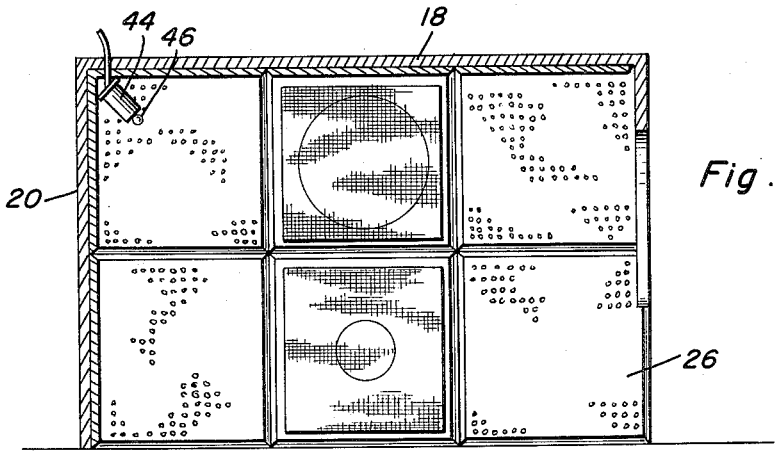

Fig. 3

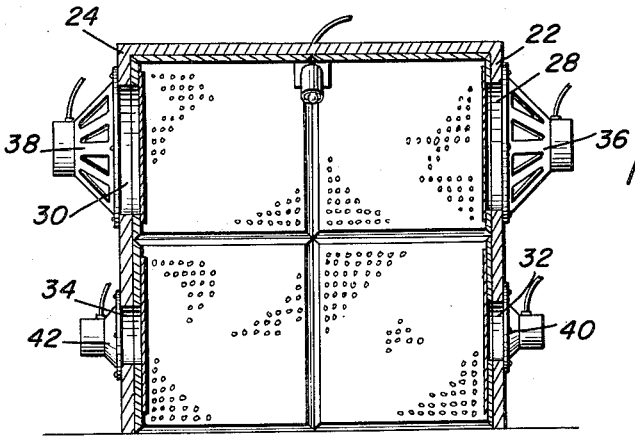

Fig. 4

Robert L. Carlin
INVENTOR.

BY Clarence A. O'Brien and Harvey B. Jacobson
Attorneys

United States Patent Office

3,014,477

Patented Dec. 26, 1961

1

3,014,477
HYPNOTIC INDUCER

Robert L. Carlin, 920 College Ave., Alton, Ill.

Filed Aug. 16, 1956, Ser. No. 604,359
3 Claims. (Cl. 128—1)

This invention relates to a therapeutic appliance and more particularly to a novel hypnotic inducer.

The primary object of the present invention resides in the provision of physical means of inducing a state of hypnosis.

Some of the uses of the invention are as an adjunct in the treatment of emotional disorders by psychiatrists and psychologists. For patients who have psychosomatic complaints, a physician could play a tape giving post-hypnotic suggestions to impart a feeling of well being and speedy recovery. Obstetricians could use this method for conditioning expectant mothers, and it could be used during the delivery of the child to eliminate pain and anxiety. Other and varied uses may be made of this hypnotic inducer for research, clinical aid, interrogation, teaching purposes, and to improve personalities and talents.

The construction of this invention features the use of a couch or bed on which a hood is positioned, which hood carries means for affecting the audible and visual senses of a subject so as to induce fatigue while providing audible suggestion to the subject.

Still further objects and features of this invention reside in the provision of a hypnotic inducer that is effective in use, composed of readily available components or those which can be easily manufactured so as to allow the device to be constructed at a comparatively low cost, and which is very easy to operate.

These, together with the various ancillary objects and features of the invention which will become apparent as the following description proceeds, are attained by this hypnotic inducer, a preferred embodiment of which has been illustrated in the accompanying drawings, by way of example only, wherein:

FIGURE 1 is a perspective view of the hypnotic inducer comprising the present invention;

FIGURE 2 is a wiring diagram of the various electrical components of the invention;

FIGURE 3 is a longitudinal sectional view of the hood comprising one of the important elements of the invention; and

FIGURE 4 is a transverse sectional view of the hood.

With continuing reference to the accompanying drawings wherein like reference numerals designate similar parts throughout the various views, reference numeral **10** generally designates the hypnotic inducer comprising the present invention. This hypnotic inducer **10** includes a couch **12** of any suitable shape or configuration on which a subject generally indicated at **14** may lie down in a comfortable position. The term couch **12** includes any sort of article of furniture of that description and includes beds, mattresses or the like. Positioned in overlying relationship with respect to the upper parts of the body of the subject **14** and the subject's head is a hood **16**. As can be seen best in FIGURES 3 and 4, the hood **16** includes a top **18**, a rear wall **20**, and side walls **22** and **24**. The hood is completely lined with a sound absorbing, sound proofing material as indicated at **26**.

2

The side walls as well as the sound proofing thereof are apertured as at **28**, **30** and **32**, **34**. Positioned in alignment with these apertures and secured to the side walls of the hood are pairs of loud speakers **36**, **38** and **40**, **42**.

Mounted against the upper central portion of the rear wall and the central rear portion of the upper wall **18** is a lamp socket and reflector as indicated at **44** in which a lamp **46** adapted to serve as a light source is positioned.

A table or any other suitable support, if desired, and indicated at **48** may be positioned adjacent the couch **12**. Positioned on the table **48** is a control unit **49** for the lamp **46**, an audio generator **50**, and amplifier **52**, and a conventional tape recorder **54** or other suitable device of similar nature.

As can be seen from an inspection of FIGURE 2, the tape recorder or phonograph **54** is connected through suitable sets of conductors **56** and **58** to the loud speakers **36** and **38**. Further, the flashing light control **49** is connected through suitable conductors as at **60** to the lamp **46**. The loud speakers **40** and **42** are connected through sets of conductors **62** and **64** and to the audio generator **50** which is amplified by the amplifier **52**.

When using the hypnotic inducer comprising the present invention the operator, who need not be especially skilled in the art, must be serious in presenting the technique. The operator will tell the subject that the operator feels the process will help the subject to relax, be able to relieve nervousness, and illustrate that highly successful results have been obtained from the use of the hypnotic inducer. Then, after explaining the procedure to the subject and that the device has been tested and checked, the audio generator is set for maximum output from speakers **36** and **38** and the amplifier is tuned to full volume so that a signal of a frequency just barely higher than the audible range of the subject is maintained. This high frequency will not only serve to fatigue the subject but will also permit undistracted perception of intelligible, audible messages from the tape recorder through speakers **42** and **44** for psychologically inducing sleep in addition to the sleep-inducing ultra-sonic and flashing light stimuli combined and concentrated within the sound-proofed hood **16**. The switch on the flashing light control **49** is operated therefore to actuate the flashing light **46**. Also, the tape recorder is turned on and the subject is instructed to look at the flashing light. This tape recording may have any suitable verbal suggestions for rendering the subject sleepy and relaxed rapidly culminating in the state of hypnosis as a result of the combined effects of the ultra-sonic and verbal stimuli as the subject's concentration is directed to a fixation point established by the flashing light.

The use of the invention may be augmented with any further explanation as desired and such further suggestion or treatment as the therapist may feel desirable.

What is claimed as new is as follows:

1. A hypnosis inducing device comprising sound-proofed hood means for enclosing the head of a person, and means for producing plural signals within the hood means including, ultra-sonic pressure wave generating means operatively connected to the hood means and directed toward the ears of the person for producing a non-audible physiological sleep-inducing stimulus, and intelligible, audible message producing means operatively connected to the hood means to simultaneously provide the person with psychological sleep-inducing stimulus

without distraction from the ultra-sonic generating means.

2. The combination of claim 1, including flashing light means mounted within the hood means to establish a fixation point for concentration by the person during the simultaneous application of the sleep-inducing stimuli.

3. The combination of claim 2, wherein the ultra-sonic pressure wave generating means includes speaker means operatively mounted in the hood means, variable audio amplifier means electrically connected to the speaker means and power oscillator means operatively connected to the amplifier means to produce an ultra-sonic signal.

References Cited in the file of this patent

UNITED STATES PATENTS

908,444	Burrhus	Jan. 5, 1909
2,304,095	Hull	Dec. 8, 1942
2,501,808	Brockway et al.	Mar. 28, 1950
2,608,969	Gordon	Sept. 2, 1952
2,659,073	Wiesman	Nov. 10, 1953

FOREIGN PATENTS

888,601	Germany	Sept. 3, 1953
807,833	France	Oct. 26, 1936

OTHER REFERENCES

Wakim: Ultrasonic Energy as Applied to Medicine from the American Journal of Physical Medicine, February 1953, volume 32, No. 1, pages 32–45 (page 35 relied on). (Copy in Division 55.)

Norry: Metodologia Hipnotica, La Semana Medica (Buenos Aires), March 1, 1956, pp. 312–318. (Copy in Division 55.)