United States Patent

Flanagan

[15] **3,647,970**

[45] **Mar. 7, 1972**

[54] **METHOD AND SYSTEM FOR SIMPLIFYING SPEECH WAVEFORMS**

[72] Inventor: **Gillis P. Flanagan,** 5207 Mimosa, Bellaire, Tex. 77401

[22] Filed: **Aug. 29, 1968**

[21] Appl. No.: **756,124**

[52] **U.S. Cl.** .....**179/1.5,** 179/1.5 M, 179/1.5 E, 325/32, 328/31

[51] **Int. Cl.** **H04k 1/00**

[58] **Field of Search** .....179/1.5 MS, 1.5 E, 15.55, 1 AS; 340/15.5 FC; 328/31; 307/237

[56] **References Cited**

UNITED STATES PATENTS

2,479,338	8/1949	Gabrilovitch	179/1.5
2,953,644	9/1960	Miller	179/15.55
2,979,611	4/1961	Halina	179/15.55

Primary Examiner—Rodney D. Bennett, Jr.
Assistant Examiner—H. A. Birmiel
Attorney—Richards, Harris & Hubbard

[57] **ABSTRACT**

A speech waveform is converted to a constant amplitude square wave in which the transitions between the amplitude extremes are spaced so as to carry the speech information. The system includes a pair of tuned amplifier circuits which act as high-pass filters having a 6 decibel per octave slope from 0 to 15,000 cycles followed by two stages, each comprised of an amplifier and clipper circuit, for converting the filtered waveform to a square wave. A radio transmitter and receiver having a plurality of separate channels within a conventional single side band transmitter bandwidth and a system for transmitting secure speech information are also disclosed.

19 Claims, 4 Drawing Figures

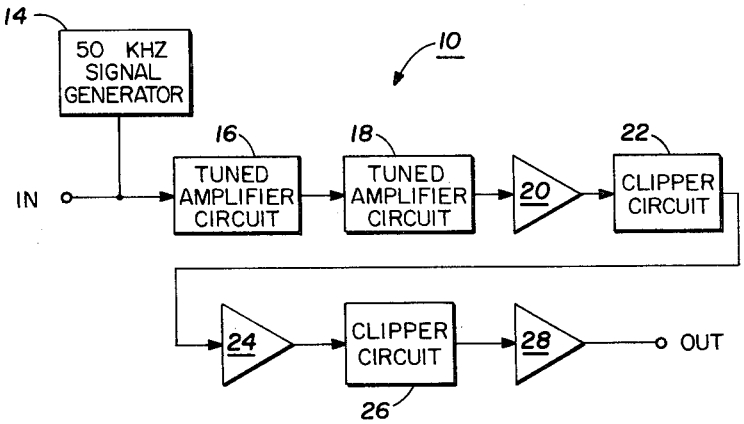

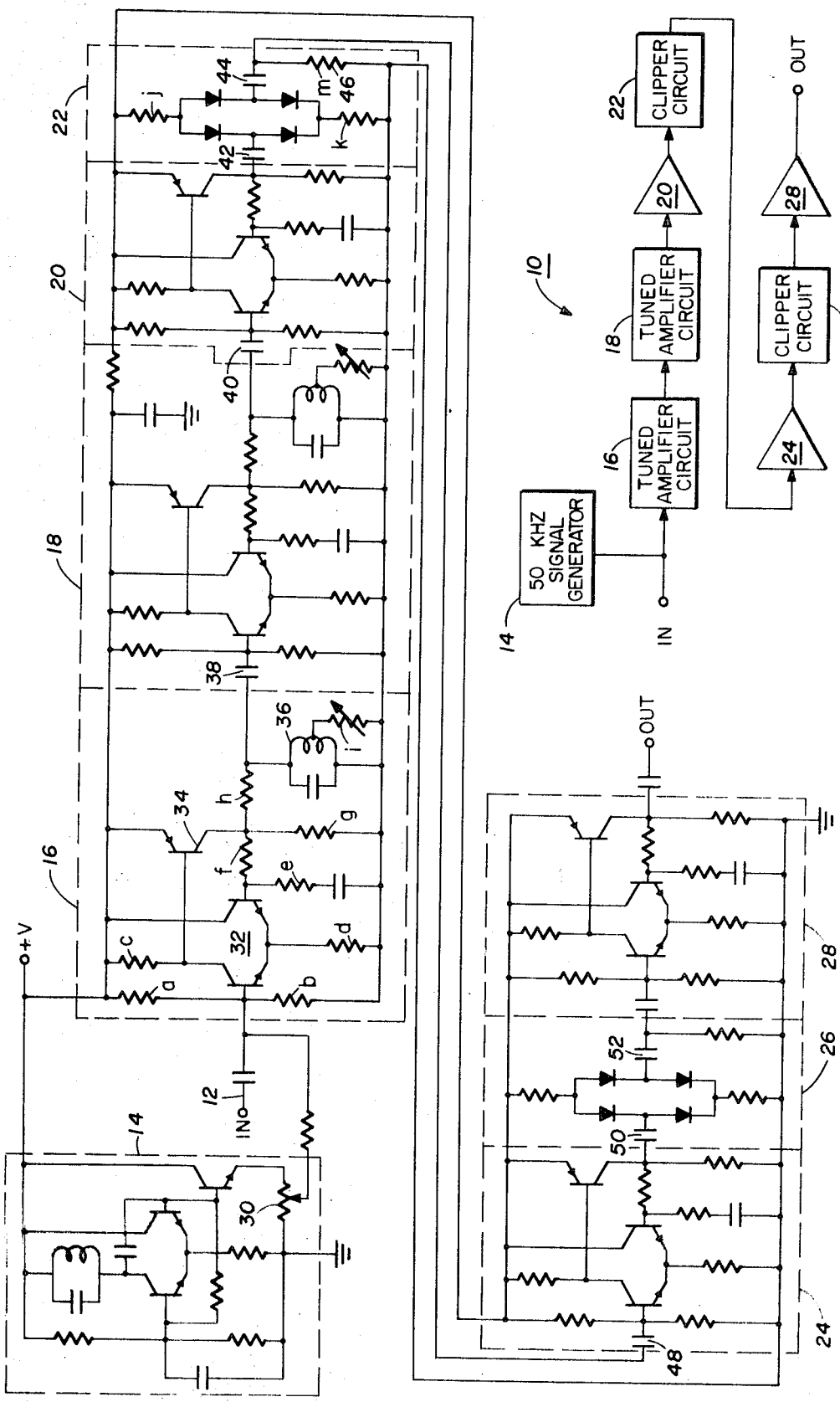
+V
IN
OUT
50 KHZ SIGNAL GENERATOR
TUNED AMPLIFIER CIRCUIT
TUNED AMPLIFIER CIRCUIT
CLIPPER CIRCUIT
CLIPPER CIRCUIT

FIG. 1

FIG. 2

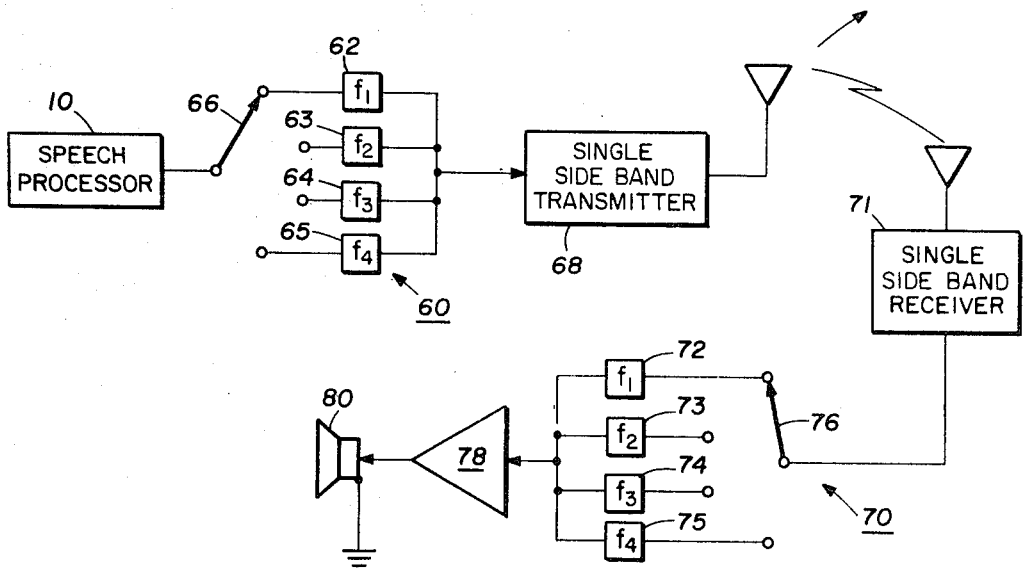
10
SPEECH PROCESSOR
66
62
63
64
65
f1
f2
f3
f4
60
SINGLE SIDE BAND TRANSMITTER
68
71
SINGLE SIDE BAND RECEIVER
72
73
74
75
76
70
80
78

FIG. 3

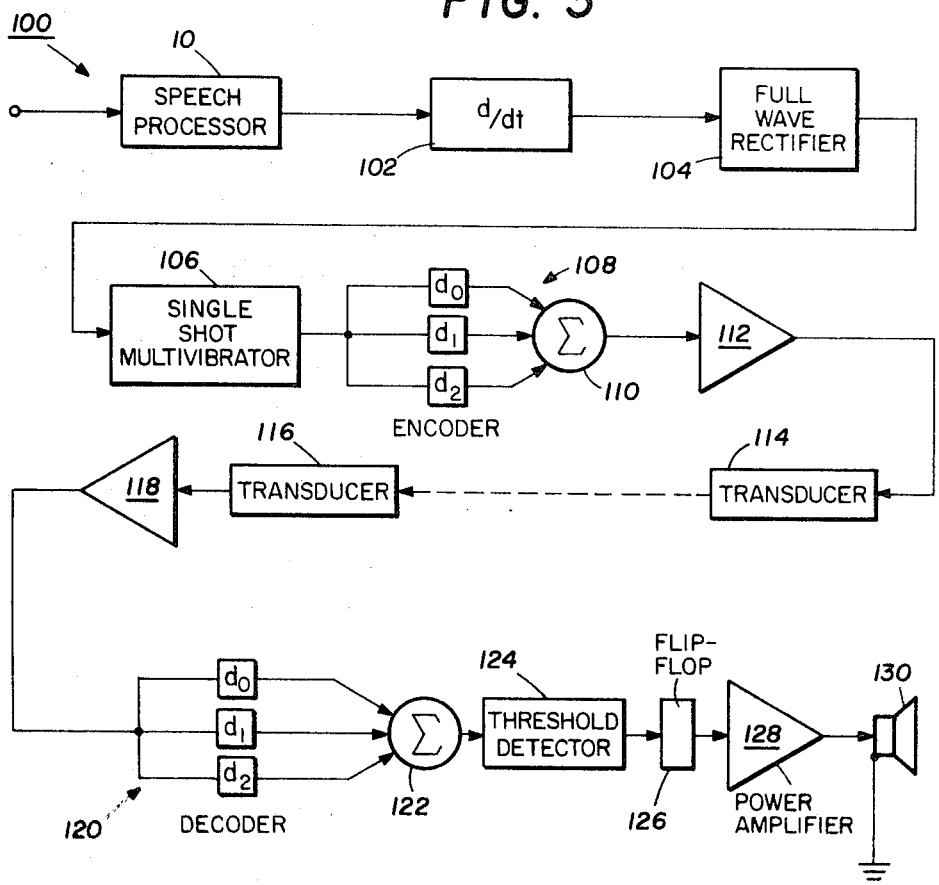
100
10
SPEECH PROCESSOR
d/dt
102
FULL WAVE RECTIFIER
104
106
SINGLE SHOT MULTIVIBRATOR
108
d0
d1
d2
110
112
ENCODER
116
TRANSDUCER
114
TRANSDUCER
118
124
THRESHOLD DETECTOR
FLIP-FLOP
126
128
POWER AMPLIFIER
130
122
120
DECODER

FIG. 4

METHOD AND SYSTEM FOR SIMPLIFYING SPEECH WAVEFORMS

BACKGROUND OF INVENTION

This invention relates generally to electronic processing of speech, and more particularly relates to a method and system for simplifying the speech waveform to facilitate transmission of the speech through various media without materially degrading intelligibility.

In the process of producing human speech, the voice box creates a series of sound pulses which reverberate within and are shaped by the upper throat and mouth cavity. The frequency of the pulses produced by the voice box primarily determines the frequency or pitch of the sound, while the shape of the mouth cavity reverberates and shapes the sound pulses to produce the speech information. The resulting speech waveform is very complex and highly redundant. If such a waveform is passed through a band-pass filter having a bandwidth significantly less than 3,000 cycles per second, the speech becomes unintelligible. Thus, even the simplest voice communication channels require a substantial bandwidth. Heretofore it has been commonly believed that the speech information was contained in the amplitude as well as the frequency modulation of the speech waveform. When voice sounds are induced in a body of water or the earth, the many reverberations caused by the various velocity discontinuities make speech unintelligible over relatively short transmission lengths. Also, the complex speech waveform has made encoding or scrambling for secure transmissions, either by electromagnetic, electrical, or pressure waves, so impractical as to be very seldom used.

SUMMARY OF INVENTION CLAIMED

This invention is concerned with a method and system for simplifying a complex speech waveform so that it can be used for a multitude of applications. The simplified speech waveform may be passed through a narrow band-pass filter, thus permitting a greater number of communication channels within a given frequency band. The simplified speech waveform can be transmitted directly through the earth or water as a pressure wave and understood, either directly from the medium, or after simple amplification. The simplified waveform can be easily encoded by scrambling to provide secure voice communications. The simplified waveform may be used to operate machinery, produces more efficient public address systems and transmitters with greater range peak power for a given average power, and thus longer ranges.

In accordance with the present invention, the speech waveform is converted to a signal having substantially constant upper and lower levels with abrupt transitions from one level to the other, the abrupt transitions being in time correspondence to amplitude changes in the speech waveform that exceed a predetermined rate of change. This is accomplished by a system including a high-pass filter and means for converting the filtered waveform to a constant amplitude, substantially square wave.

More specifically, optimum results have been achieved by using a filter having a 12 decibel per octave slope from 0 to 15,000 cycles per second. In one specific embodiment, this filter is formed by a pair of tuned amplifier circuits each having a 6 decibel per octave slope within the frequency range of interest. In this embodiment, the speech waveform is preferably combined with a high frequency noise masking signal of lower amplitude prior to processing.

In accordance with another specific aspect of the invention, means for converting the filtered signal to a square wave comprises at least one amplifier followed by a clipper circuit.

The invention also contemplates a voice communication system having a plurality of separate channels within a bandwidth normally allotted for a single frequency, for example four channels within a bandwidth of 1,500 cycles per second. In this system the processed speech is selectively passed through one of a plurality of narrow band-pass filters to a transmitter. The receiver has similar narrow band-pass filters so as to be selectively sensitive to transmissions in that pass band.

In accordance with another specific aspect of the invention, each transition of the square wave is converted to a pulse of predetermined amplitude and width, which is then converted into a plurality of pulses with predetermined time spacing. These pulses are then transmitted to a receiver where the plurality of spaced pulses are recombined as one pulse. The square wave is then reproduced from the recombined pulses.

BRIEF DESCRIPTION OF THE DRAWINGS

The novel features believed characteristic of this invention are set forth in the appended claims. The invention itself, however, as well as other objects and advantages thereof, may best be understood by reference to the following detailed description of illustrative embodiments, when read in conjunction with the accompanying drawings, wherein:

FIG. **1** is a schematic block diagram of a system for processing a simplified speech waveform in accordance with the present invention;

FIG. **2** is a detailed schematic circuit diagram of the system of FIG. **1**;

FIG. **3** is a schematic block diagram of a multichannel transmitter in accordance with the present invention; and

FIG. **4** is a schematic block diagram of a system for transmitting and receiving scrambled speech waveforms in accordance with the present invention.

DESCRIPTION OF PREFERRED EMBODIMENTS

Referring now to the drawings, and in particular to FIG. **1**, a speech processor in accordance with the present invention is indicated generally by the reference numeral **10**. The speech waveform is applied to the input **12** as a voltage signal derived from a microphone (not illustrated) or other suitable transducer. The speech waveform is summed with a much higher frequency, for example 50 kHz., masking signal produced by the signal generator **14**. This signal is passed through a pair of tuned amplifier circuits **16** and **18**. Each of the circuits **16** and **18** is a high-pass filter having a 6 decibel per octave slope from 0 to 15,000 cycles per second, thus providing a combined slope of 12 decibels per octave.

The filtered waveform is then passed through a circuit means for converting the filtered waveform to a square wave which is comprised of a first high gain amplifier **20**, a first clipper circuit **22**, a second high gain amplifier **24**, and a second clipper circuit **26**. The square wave is then passed through power amplifier **28** to the output in a form to drive a loudspeaker, transducer, radio transmitter or the like. When ultimately passed through a speaker, or other suitable transducer, the square wave is fully intelligible. The square wave so produced has constant upper and lower levels, with very abrupt transitions between the upper and lower levels as a result of the two stages of amplification and clipping. The transitions occur in time correspondence to amplitude changes in the original speech waveform applied to the input **12** that exceed a predetermined rate of change so as to be passed through the high-pass filters **16** and **18**.

A detailed circuit diagram of the system **10** is shown in FIG. **2** wherein corresponding components are designated by corresponding reference numerals. Each of the components is of conventional design. The signal generator **14** has a variable load resistor **30** in the output stage which permits the amplitude of the masking signal to be adjusted to eliminate oscillations caused by noise. The amplitude of the masking signal should not be any greater than is required to prevent oscillation to minimize interference with the processing of the speech waveform. The tuned amplifier circuits **16** and **18** are of identical construction. Each is comprised of an amplifier having a differential input stage **32** and a single output stage **34** which drives a tuned filter circuit **36**. The tuned amplifier circuits **16** and **18** are coupled by capacitor **38**, which of

course also comprises an element of the filter. The amplifier **20** is identical to the amplifier portions of the tuned amplifiers **16** and **18**, and is coupled to the output of tuned amplifier **18** by capacitor **40**. The clipper circuit **22** is merely a diode bridge coupled to the output of amplifier **20** by capacitor **42**, followed by a filter comprised of capacitor **44** and resistor **46**. The output of the clipper circuit **22** is coupled to the input of amplifier **24** by capacitor **48**. Clipper **26** is identical to clipper **22** and is coupled to the output of amplifier **24** by capacitor **50**. Amplifier **28** is identical to amplifiers **20** and **24** and is coupled to the output of the clipper circuit **26** by capacitor **52**.

In a typical embodiment of the circuit of FIG. **2**, the PNP-transistors may be MPS3640 transistors, the NPN-transistors may be MPS3393 transistors, and the diodes may be IN914 diodes. The resistors have the following values in kilohms as referenced in circuits **16** and **22**: a=33, b=33, c=10, d=33, e=0.33, f=33, g=10, h=10, i=10, j=100, k=100, and m=1.0. The capacitors are 10 microfarads, except for the capacitors in the LC tuned circuits which are 0.001 microfarads. All coils are 10 millihenrys.

The high-pass filters **16** and **18** may be of any suitable conventional circuit design, and may be a resistor-capacitor filter, a shorted delay line filter, or an inductor-capacitor filter, for example. The means for converting the filtered waveform to a square wave may also be any suitable conventional circuit such as a Schmidt trigger, or a very high gain amplifier which quickly saturates.

A multichannel speech transmission system in accordance with the present invention is indicated generally by the reference numeral **60** in the schematic block diagram of FIG. **3**. In the system **60**, the speech processor **10** is selectively connectable to any one of four filters **62–65** by a selector switch **66**. The outputs of the filters **62–65** are connected to the input of a conventional single side band transmitter **68**.

The filters **62–65** are narrow band-pass filters of any suitable conventional design having mutually exclusive pass bands of about 300 cycles centered at frequencies f_1, f_2, f_3 and f_4, and are grouped within a total bandwidth of about 1,500 cycles, for example. Since 3,000 cycles is a typical bandwidth for single side band transmitters operated for simple speech transmission, eight filters can be used if desired. The square wave produced by the speech processor **10** may be selectively passed through any one of the narrow band-pass filters **62–65** without materially reducing its intelligibility.

The filtered square wave is transmitted by the conventional transmitter **68** to a conventional single side band receiver **70**. The output of the receiver **70** is selectively connectable through filters **72–75** to a power amplifier **78** by a selector switch **76**. The filters **72–75** have corresponding passbands centered at frequencies f_1, f_2, f_3 and f_4. The amplifier **78** may drive a speaker **80**. Therefore, if the selector switch **76** of a particular receiving set **70** is set to the filter corresponding in frequency to the filter selected by switch **66** in the transmitter, the filtered square wave will be reproduced by the speaker **80** and will be sufficiently intelligible for nearly all voice communication purposes. However, if the selector switch **76** of a particular receiver is set to another frequency filter, no sound is produced by the speaker **80**. Thus, the transmission system of FIG. **3** provides four separate voice channels within the frequency band of 1,500 cycles, or eight channels in the 3,000 cycle bandwidth conventionally allotted for single side band operation. Of course, it is to be understood that the particular radio frequency is merely illustrative of the broader concept of the invention and that the same principles can be applied to transmissions through any media by electrical or electromagnetic waves.

A secure system for transmitting scrambled voice communications is indicated generally by the reference numeral **100** in FIG. **4**. Again the speech processor **10** is used to generate the square wave as heretofore described. The square wave is then passed through a differentiator **102** which produces a sharp spike pulse in time correspondence to each transition of the square wave. The sharp spike pulses have a polarity determined by the polarity of the transition and are therefore passed through a fullwave rectifier **104** which converts all of the spike pulses to the same polarity. The spike pulses are then used to trigger a single shot multivibrator **106** which produces a pulse of predetermined amplitude and time width in response to each spike pulse. The uniform pulses from the single shot multivibrator **106** are then passed through an encoder **108** which produces a plurality of pulses of corresponding width in a predetermined timed sequence in response to each input pulse. This may easily be accomplished by a plurality of parallel delay lines d_0, d_1, and d_2 for transferring the pulses to point **110** at predetermined time intervals. The pulses are then amplified by an amplifier **112** which drives a transducer **114**. The transducer **114** may induce the pulses in water, in the earth, or in any other propagating medium. Or if desired, the transducer **114** can be replaced by a radio or other electromagnetic wave transmitter.

The transmitted pulses are received by an appropriate receiving transducer **116**, which reproduces electrical pulses of corresponding width and amplitude. The received pulses are amplified by amplifier **118** and applied to a decoder **120**. The decoder **120** is comprised of an identical number of delay lines of identical time relationship so that the three pulses are recombined as a single pulse at summation point **122**. Each time that the three pulses occur at the same point in time, the sum of the pulses exceeds the threshold of a detector **124** which triggers a flip-flop **126**. The output of the flip-flop is then a reproduction of the square wave originally produced by the speech processor **10**. This square wave is then amplified by amplifier **128** to drive a speaker **130** and produce the voice communication. Reproduction of the voice communication can be accomplished only if the receiving decoder matches the transmitting encoder. The encoders and decoders can be easily changed as required in order to maintain secure transmissions.

Although preferred embodiments of the invention have been described in detail, it is to be understood that various changes, substitutions and alterations can be made therein without departing from the spirit and scope of the invention as defined by the appended claims.

What is claimed is:

1. The method for simplifying a speech waveform which comprises producing a signal having constant upper and lower levels with abrupt transitions from one level to the other, the abrupt transitions being in time correspondence to amplitude changes in the speech waveform that exceed a predetermined rate of change.

2. The method for simplifying a speech waveform which comprises:

passing the waveform through a high-pass filter, then

converting the filtered waveform to a square wave of constant amplitude.

3. The method defined in claim **2** wherein the high-pass filter has a slope of about twelve decibels per octave in the frequency range of interest.

4. The method for transmitting speech which comprises:

producing an electrical waveform representative of the pressure waves produced by speech,

passing the electrical waveform through a high-pass filter to produce a first filtered signal,

converting the filtered waveform to a square waveform of constant amplitude, and

driving a speaker with the square waveform.

5. The method defined in claim **4** wherein:

the square waveform is transmitted as a pressure wave prior to being used to drive a speaker.

6. The method defined in claim **4** wherein:

the square waveform is transmitted by electromagnetic wave propagation prior to being used to drive a speaker.

7. The method defined in claim **4** wherein:

the square waveform is converted to a series of time related pulses, and the time related pulses are transmitted to another locale and converted back to a square waveform which is used to drive the speaker.

8. The method defined in claim 4 wherein the square waveform is passed through a band-pass filter having a center frequency in the audio range prior to being used to drive the speaker.

9. The system for simplifying a speech waveform which comprises:

means for for producing a speech waveform,

high-pass filter means for filtering the speech waveform, and

means for converting the filtered waveform to a constant amplitude square wave.

10. The system defined in claim 9 wherein the filter means has a slope of about twelve decibels per octave in the frequency range of interest.

11. The system defined in claim 10 wherein the filter means is two filter circuits in series each having a slope of about 6 decibels per octave.

12. The system defined in claim 11 wherein each filter means includes an amplifier followed by a tuned circuit.

13. The system defined in claim 9 wherein the means for converting the filtered waveform to a constant amplitude square wave is at least one stage comprised of an amplifier and means for limiting the amplitude of the output of the amplifier.

14. The system defined in claim 13 wherein the means for converting the filtered waveform to a constant amplitude square wave is two stages connected in series, each stage comprising an amplifier and means for limiting the amplitude of the output of the amplifier.

15. The system defined in claim 9 further characterized by:

at least two band-pass filter means having different pass bands in the audio range for filtering the square wave,

transmitter means for transmitting an audio range signal, and

switch means for passing the square wave through a selected band-pass filter means to the transmitter means.

16. The system defined in claim 9 further characterized by:

means for converting the square wave to a series of pulses occurring in a predetermined time relationship to at least a portion of the transitions of the square wave, and

means for transmitting the pulses.

17. The system defined in claim 16 wherein the means for converting the square wave to a series of pulses comprises:

means for producing a first set of pulses of predetermined amplitude and time duration, each pulse corresponding in time to a transition of the square wave, and

encoder means for producing a plurality of pulses in predetermined time relationship for each pulse of the first set of pulses.

18. The system defined in claim 17 wherein the encoder means comprises:

at least two parallel paths for the pulses of the first set having different propagation periods.

19. The system defined in claim 16 further characterized by:

means for receiving the pulses and converting the pulses back to a square wave having time correspondence to the original square wave.

* * * * *