Sept. 28, 1937. J. B. FRIEDMAN 2,094,268

DRINKING TUBE

Filed Nov. 7, 1936

Fig. 1.

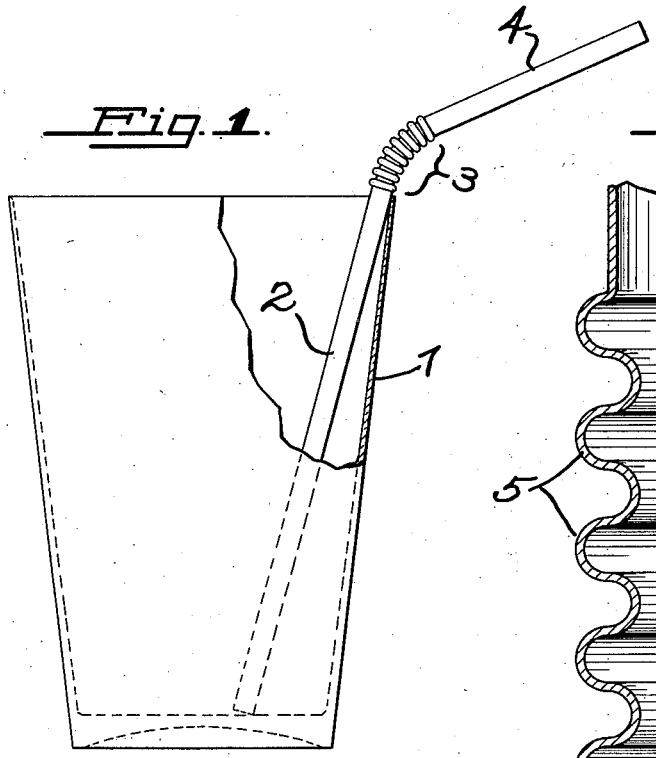

Fig. 2.

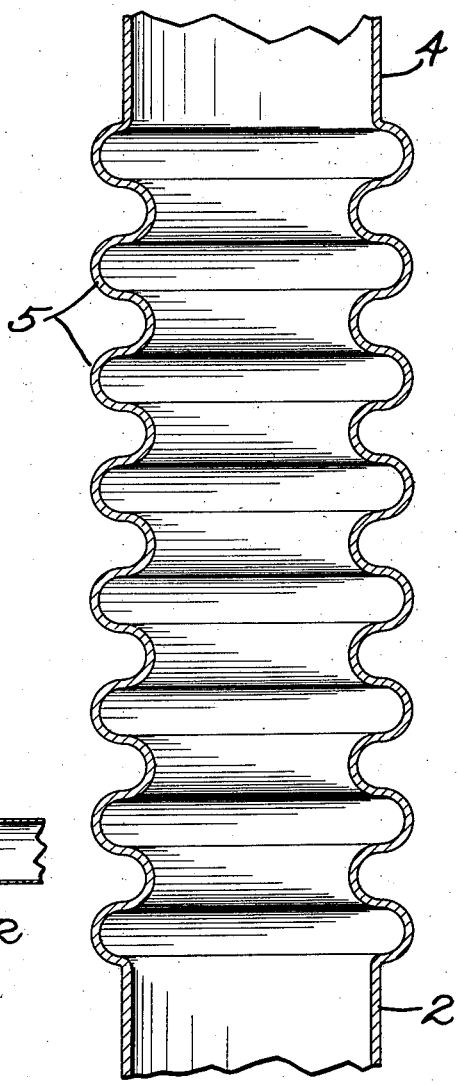

Fig. 3.

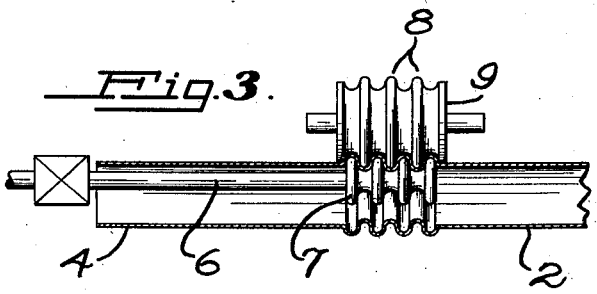

INVENTOR,
JOSEPH BERNARD FRIEDMAN.
BY
Lippincott & Metcalf
ATTORNEYS.

Patented Sept. 28, 1937 2,094,268

UNITED STATES PATENT OFFICE

2,094,268

DRINKING TUBE

Joseph Bernard Friedman, San Francisco, Calif.

Application November 7, 1936, Serial No. 109,659

3 Claims. (Cl. 138—78)

My invention relates to drinking tubes and more particularly to that type of drinking tube known in the trade as a "soda straw" which, while sometimes actually made from a straw, is usually wound or otherwise formed from oiled paper, paraffin paper, Cellophane, or the like.

The main object of my invention is to provide a soda straw or similar drinking tube with a flexible section so positioned that the tube may be bent during use without substantially reducing the diameter of the straw.

Other objects of my invention will be apparent or will be specifically pointed out in the description forming a part of this specification, but I do not limit myself to the embodiment of the invention herein described, as various forms may be adopted within the scope of the claims.

Referring to the drawing:

Figure 1 is a diagrammatic view of the drinking tube of my invention used in conjunction with a drinking glass.

Figure 2 is a longitudinal section through a corrugated portion of the straw.

Figure 3 is a diagrammatic representation of one form of apparatus which may be used to form the corrugations in the straws.

Large quantities of the so-called soda straws are used at soda fountains in order that liquids may be sipped or drawn through the soda straw into the mouth of the customer. Such straws are, however, used in conjunction with either bottles or tall glasses and the straw, when positioned in the glass, extends nearly in a vertical direction. In order to drink in any satisfactory manner through the straw, it is either necessary to take the glass or bottle in the hand and tilt it, or to lean forward and bend the face down to contact the straw with the mouth. Either of these procedures is awkward and it is extremely common for the straws to become bent and broken over the rim of the bottle or glass during the consumption of the liquid. As the straws are substantially cylindrical such bending greatly obstructs the lumen of the straw and reduces the amount of liquid which can be drawn therethrough.

My invention provides a flexible portion in the straw positioned near one end so that a bend may be made at a point above the rim or lip of the container and the upper, or mouthpiece end of the straw may then be angularly directed to enter the mouth readily without the customer assuming an awkward position.

The broad aspects of my invention may be more fully understood by direct reference to the drawing.

In Figure 1, a container 1 is outlined with a soda straw 2 in position, this soda straw having a flexible portion 3 located above the rim of the container 1, thus providing a mouthpiece portion 4 which may be directed at an angle to the remainder of the straw. This flexible portion 3 is shown more in detail in Figure 2 and is preferably formed on the straw by providing a series of corrugations 5 extending around the straw, the flexible portion being, for example, one-quarter inch long. These corrugations need not be excessively deep and I have found that corrugations provide sufficient flexibility to the mouthpiece end so that the proper drinking angle may be attained when the container is resting on a counter or similar surface.

The modern soda straw is usually formed from a spirally wound strip of oiled or paraffin paper, or similar material and I have found that it is entirely practicable to roll the corrugations in the straw after it has been formed into cylindrical form, one such manner of forming the corrugations being shown in Figure 3. Here the straw is placed on a mandrel 6 which is of substantially smaller diameter than the straw and which is provided at its outer end with mandrel corrugations 7. Opposing these mandrel corrugations on the outside of the straw are wheel corrugations 8 cut into a rotating wheel 9, the corrugations being so related that when wheel 9 is advanced to bear against the straw and the mandrel 6, and the wheel and mandrel rotated in opposite directions, corrugations 5 in the wall of the straw will be formed. The wheel may then be retracted and the straw lifted off the mandrel. The straw is then ready for use and the corrugations thus formed provide sufficient flexibility so that the mouthpiece end may be utilized at an angle to the main portion of the straw without substantially decreasing the diameter or obstructing the lumen thereof.

The corrugations in the straw of my invention may also be formed in the case of straws which are wound from flat strips by corrugating the flat strip in such manner that the straw may be wound after corrugation. Both longitudinal and transverse corrugations are required in this latter instance but the flexible portion 3 will be formed after winding. Inasmuch as this latter proceeding is no part of the present invention it will not be described here, the present application being directed to the product alone.

It is obvious, however, that my invention may be applied to drinking tubes formed from other materials than the paper tubes above described

and it is equally obvious that the flexible portion may be placed in a position with regard to the termini of the tube to cooperate with whatever type of use is desired. For example, in hospitals it is customary to supply liquids to patients in reclining positions. The drinking tube herein described is ideal for this purpose in that such a degree of flexibility is obtained that the angle between the mouthpiece and the remainder of the tube may be adjusted to suit individual circumstances. Furthermore, it will be obvious to those skilled in the art that it is not necessary for the cross-section of my drinking tube to be a cylinder and my invention may be applied to all tubes regardless of cross-section even though the flexibility may be obtainable only in one plane. I, therefore, do not wish to be limited in any way to cylindrical tubes. It is also to be understood that the size, shape and number of the corrugations may be changed without departing from the spirit of the invention as set forth in the claims hereto appended.

I claim:

1. In a drinking tube, means for facilitating the use thereof without the necessity of tilting a beverage container when drinking said means providing for a free bending of said tube without cutting off the flow of liquid and comprising a relatively narrow corrugated zone intermediate the ends thereof.

2. In a beverage straw or drinking tube having walls of material sufficiently rigid normally to withstand the pressure of the liquid and solids and semi-solids borne thereby when thrust into a beverage container, means for facilitating the use thereof without the necessity of tilting said container when using said drinking tube, said means providing for a free bending of said tube without substantially decreasing the lumen thereof, and comprising a zone of transverse corrugations formed in said wall material intermediate the ends of said tube.

3. In a beverage straw or drinking tube having walls of material sufficiently rigid normally to withstand the pressure of the liquid and solids and semi-solids borne thereby when thrust into a beverage container, means for facilitating the use thereof without the necessity of tilting said container when using said drinking tube, said means comprising a freely flexible zone formed in said tube and spaced sufficiently from one end of the relatively rigid portion of said tube to permit said relatively rigid portion to be thrust to the bottom of the container while the bending of said flexible portion occurs substantially at the rim of said container.

JOSEPH BERNARD FRIEDMAN.