US00D839267S

(12) **United States Design Patent**
Park

(10) **Patent No.: US D839,267 S**
(45) **Date of Patent: ** Jan. 29, 2019**

(54) **DISPLAY DEVICE**

(71) Applicant: **Samsung Display Co., Ltd.**, Yongin-si, Gyeonggi-do (KR)

(72) Inventor: **Sang Hyo Park**, Suwon-si (KR)

(73) Assignee: **Samsung Display Co., Ltd.**, Yongin-si (KR)

(**) Term: **15 Years**

(21) Appl. No.: **29/623,002**

(22) Filed: **Oct. 20, 2017**

(30) **Foreign Application Priority Data**

Apr. 25, 2017 (KR) 30-2017-0019245

(51) **LOC (11) Cl.** **14-02**

(52) **U.S. Cl.**
USPC ..... **D14/345**; D14/138 R

(58) **Field of Classification Search**
USPC ..... D14/341–347, 125–134, 137, 138 R, D14/138 AA, 138 AB, 138 C, 138 G, 147, D14/203.1, 203.3, 203.4, 203.7, 218, 247, D14/248, 332, 336, 371, 374–377, 388, D14/389, 315–318, 420, 426, 429, 440, D14/448, 450, 489, 492, 496; D6/300–310; D10/50, 65, 98, 104.1;
(Continued)

(56) **References Cited**

U.S. PATENT DOCUMENTS

5,189,632 A * 2/1993 Paajanen G06F 1/1616 455/556.2
D596,657 S * 7/2009 Adams D16/241
(Continued)

FOREIGN PATENT DOCUMENTS

KR 10-2016-0004316 A 1/2016
KR 10-2016-0025888 A 3/2016
(Continued)

OTHER PUBLICATIONS

Futuristic Flexible Windows Smartphone Has a Crystal Clear Body, posted Oct. 5, 2015, [retrieved Aug. 25, 2018]. Retrieved from Internet, <URL: https://www.concept-phones.com/microsoft/futuristic-flexible-windows-smartphone-crystal-clear-body/ >.*
(Continued)

Primary Examiner — Barbara Fox
Assistant Examiner — Kristin E Reed
(74) *Attorney, Agent, or Firm* — Lewis Roca Rothgerber Christie LLP

(57) **CLAIM**

The ornamental design for a display device, as shown and described.

DESCRIPTION

FIG. **1** is a front perspective view of a display device showing our new invention;
FIG. **2** is a front view thereof;
FIG. **3** is a rear view thereof;
FIG. **4** is a left side view thereof;
FIG. **5** is a right side view thereof;
FIG. **6** is a top view thereof;
FIG. **7** is a bottom view thereof;
FIG. **8** is a front perspective view of the display device when folded along a center portion and unfolded along an edge portion; and,
FIG. **9** is a perspective view of the display device when unfolded along the center portion and the edge portion.
The broken lines shown in the drawings depict portions of the display device that form no part of the claimed design.

1 Claim, 9 Drawing Sheets

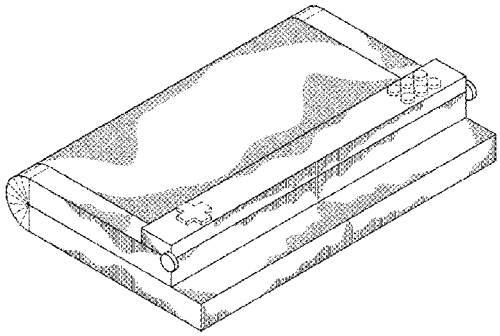

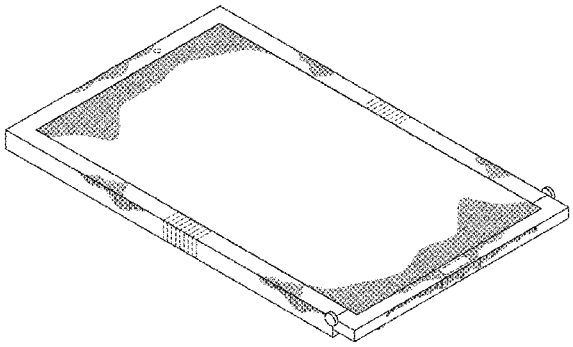

(58) **Field of Classification Search**

USPC D16/241; D18/4.6, 6; D20/10, 19, 39; D21/329, 330

CPC . A63H 33/3016; G06F 1/1613; G06F 1/1641; G06F 1/1643; G06F 1/1647; G06F 3/04883; G06F 3/0486; G06F 3/04847; G06F 3/04845; G06F 3/0484; G06F 3/04817; H05K 5/0004; H05K 5/0017; H05K 5/02; H05K 5/0217; H04M 1/0279; H04M 1/0281; H04M 1/0283; H04N 13/0459

See application file for complete search history.

(56) **References Cited**

U.S. PATENT DOCUMENTS

8,493,730	B2		7/2013	Shim et al.
8,587,539	B2		11/2013	Tziortzis et al.
8,896,202	B2		11/2014	Oh
D719,542	S		12/2014	Lee et al.
D729,792	S	*	5/2015	Kurimoto D14/315
9,052,769	B2		6/2015	Choi et al.
D745,006	S		12/2015	Hirakata et al.
D745,516	S		12/2015	Yamazaki et al.
D750,036	S		2/2016	Endo et al.
D750,064	S		2/2016	Yamazaki et al.
D757,723	S		5/2016	Kwak et al.
D760,218	S		6/2016	Yamazaki
D761,251	S		7/2016	Senda
D761,252	S		7/2016	Senda
D761,253	S		7/2016	Yamakazi
D761,254	S		7/2016	Yamazaki et al.
D761,787	S		7/2016	Yamazaki
D761,788	S		7/2016	Yamakazi
D761,789	S		7/2016	Yamazaki
D761,790	S		7/2016	Yamakazi
D767,526	S		9/2016	Lee et al.
D767,530	S		9/2016	Bae et al.
D769,209	S	*	10/2016	Byun ..... D14/138 AB
D772,225	S	*	11/2016	Kacin D14/341
D778,864	S	*	2/2017	Kim ..... D14/138 AB
9,733,744	B2	*	8/2017	Lee G06F 3/0412
D811,393	S	*	2/2018	Ahn D14/371
D814,455	S	*	4/2018	Kwon D14/341
9,933,819	B2	*	4/2018	Kim G06F 1/1652
10,015,897	B1	*	7/2018	Hong H05K 5/0217
D825,518	S	*	8/2018	Kikuchi ..... D14/138 AB
10,043,421	B2	*	8/2018	Koo G09F 9/301
2014/0218321	A1		8/2014	Lee et al.
2014/0321072	A1		10/2014	Cavallaro et al.
2015/0109544	A1		4/2015	Yeo et al.
2015/0146386	A1		5/2015	Namkung et al.
2015/0146387	A1		5/2015	Lee

FOREIGN PATENT DOCUMENTS

KR	10-2016-0055416	A	5/2016
KR	10-2016-0074815	A	6/2016
KR	10-2016-0080034	A	7/2016
KR	10-2016-0103599	A	9/2016

OTHER PUBLICATIONS

Samsung Galaxy X ,Primul smartphone pliabil de la Samsung va deveni realitate, posted Dec. 18, 2017, [retrieved Aug. 25, 2018]. Retrieved from Internet, <URL: https://noutati-tehnologie.com/samsung-galaxy-x-primul-snnartphone-pliabil-de-la-samsung/ >.*

Samsung Galaxy Wing is a 7-inch 4K Smartphone with a Foldable Display, posted Feb. 26, 2018, [retrieved Aug. 25, 2018]. Retrieved from Internet, <URL: http://www.techeblog.com/index.php/tech-gadget/samsung-galaxy-wing-is-a-7-inch-4k-smartphone-with-a-foldable-display >.*

Folding Screen Smartphone—The Concept is Now a Reality, posted Jun. 29, 2016, [retrieved Aug. 25, 2018]. Retrieved from Internet, <URL: https://www.buzzing.tech/folding-screen-smartphone-concept-now-reality/253/ >.*

* cited by examiner

FIG. 1

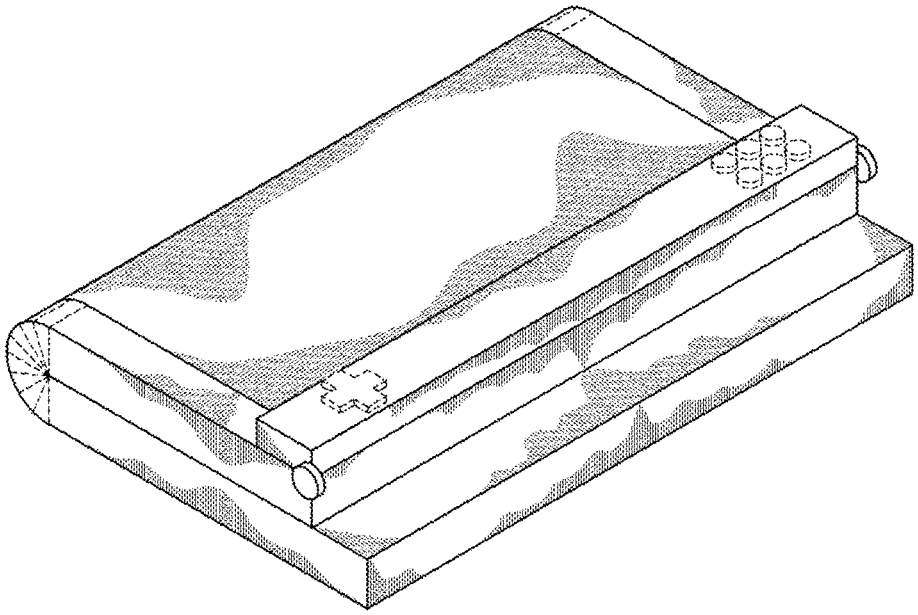

FIG. 2

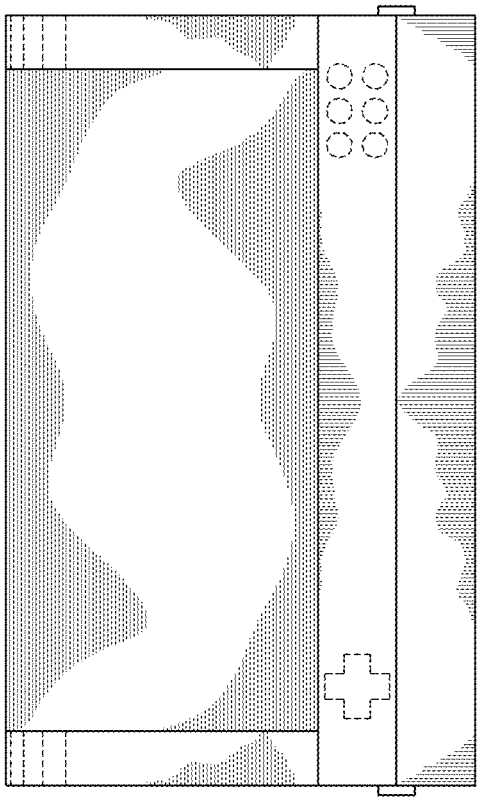

FIG. 3

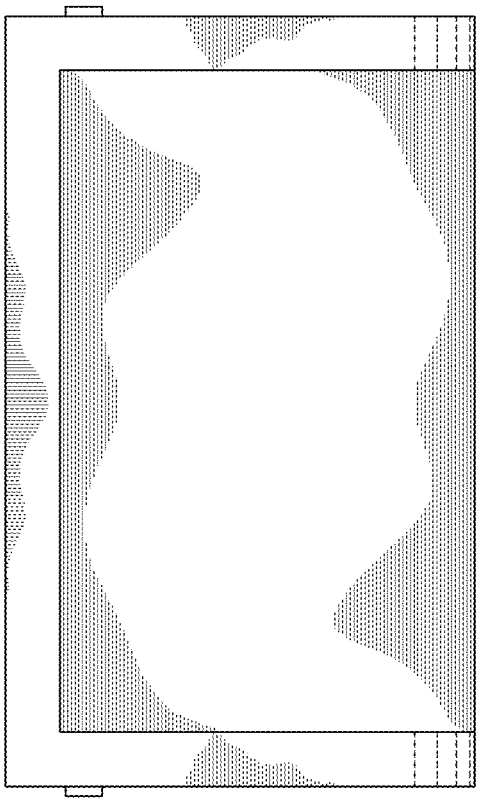

FIG. 4

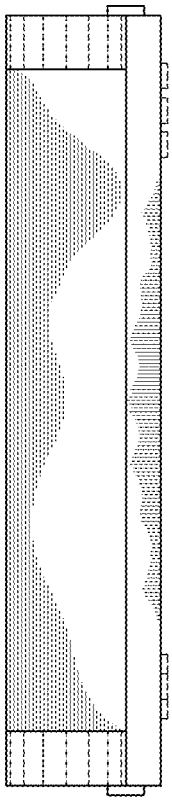

FIG. 5

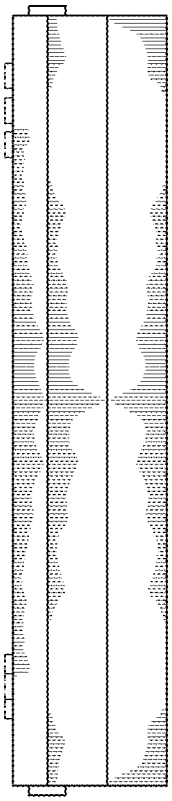

FIG. 6

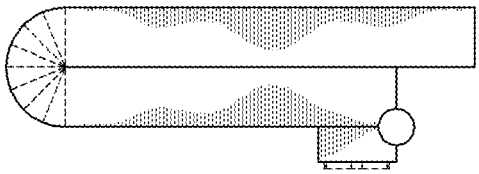

FIG. 7

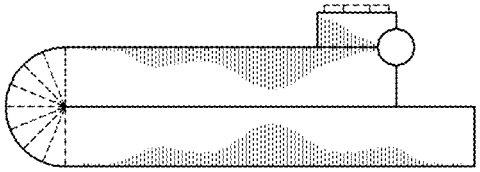

FIG. 8

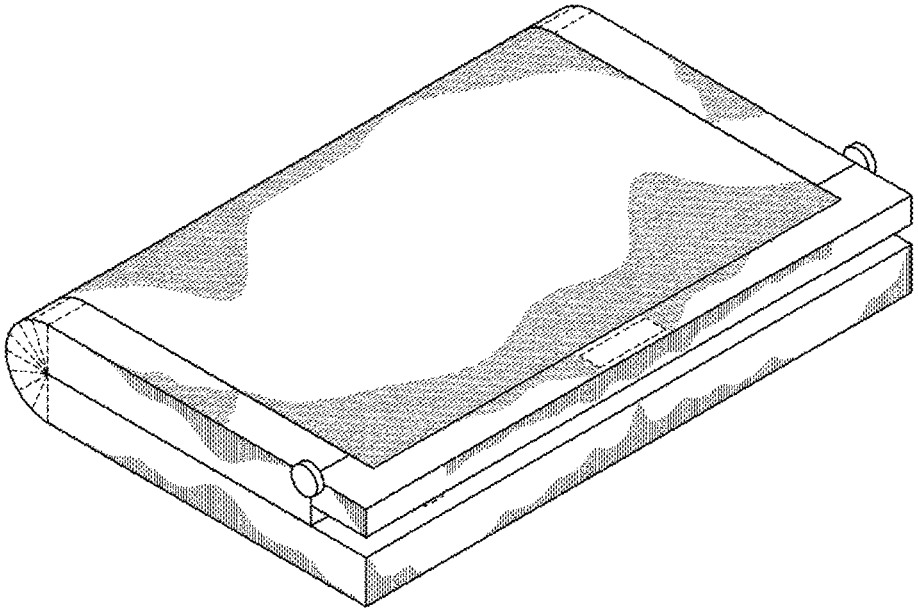
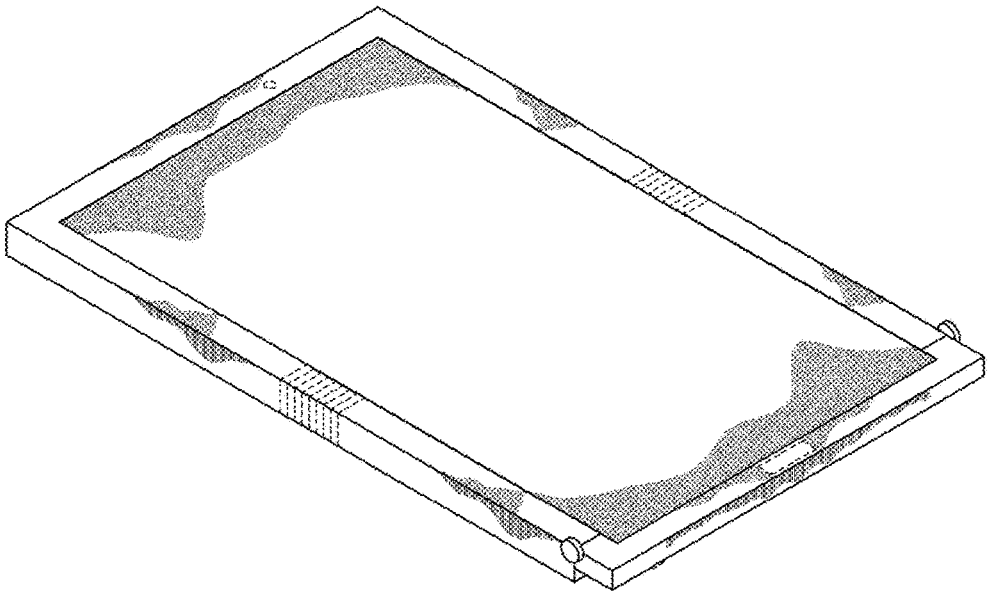
FIG. 9