US00D927356S

(12) United States Design Patent

Burki

(10) Patent No.: US D927,356 S
(45) Date of Patent: ** Aug. 10, 2021

(54) **MOTOR VEHICLE, TOY AND/OR REPLICA**

(71) Applicant: **Dr. Ing. h.c. F. Porsche Aktiengesellschaft**, Stuttgart (DE)

(72) Inventor: **Emiel Burki**, Stuttgart (DE)

(73) Assignee: **Dr. Ing. h.c. F. Porsche Aktiengesellschaft**

(**) Term: **15 Years**

(21) Appl. No.: **29/726,229**

(22) Filed: **Mar. 2, 2020**

(30) **Foreign Application Priority Data**

Sep. 6, 2019 (DE) 40 2019 100 964.7

(51) **LOC (13) Cl.** **12-08**

(52) **U.S. Cl.**
USPC **D12/91**

(58) **Field of Classification Search**
USPC D12/86, 90–92, 88; D21/424, 433, 434, D21/533; 296/181.1–181.5, 183.1
CPC B62D 25/00; B62D 25/06; B62D 33/00; B62D 35/00
See application file for complete search history.

(56) **References Cited**

U.S. PATENT DOCUMENTS

D574,754 S * 8/2008 Miniati D12/92
D797,606 S * 9/2017 Oh D12/92
D808,302 S * 1/2018 Oh D12/92
D821,923 S * 7/2018 Lee D12/92
D826,781 S * 8/2018 Scheinhutte D12/91
D836,031 S * 12/2018 Lim D12/92
D855,497 S * 8/2019 Kim D12/91
D857,556 S * 8/2019 Scheinhutte D12/91
D858,354 S * 9/2019 Scheinhutte D12/91
D858,355 S * 9/2019 Scheinhutte D12/91
D865,568 S 11/2019 Burki
D867,932 S * 11/2019 Yamashita D12/92
D868,630 S 12/2019 Burki
D877,658 S * 3/2020 Burki D12/91
D902,080 S * 11/2020 Lim D12/91
D913,856 S * 3/2021 Lenglin D12/92

* cited by examiner

Primary Examiner — Melody N Brown
(74) *Attorney, Agent, or Firm* — RatnerPrestia

(57) **CLAIM**

The ornamental design for a motor vehicle, toy and/or replica, as shown and described.

DESCRIPTION

FIG. **1** is a front perspective view of a motor vehicle, toy and/or replica;
FIG. **2** is a rear perspective view thereof;
FIG. **3** is a front elevation view thereof;
FIG. **4** is a rear elevation view thereof;
FIG. **5** is a right side view thereof, the left side being a mirror image thereof; and,
FIG. **6** is a top view thereof.
The portions of the motor vehicle, toy and/or replica shown in broken lines are for illustrative and environmental purposes and form no part of the claimed design.

1 Claim, 6 Drawing Sheets

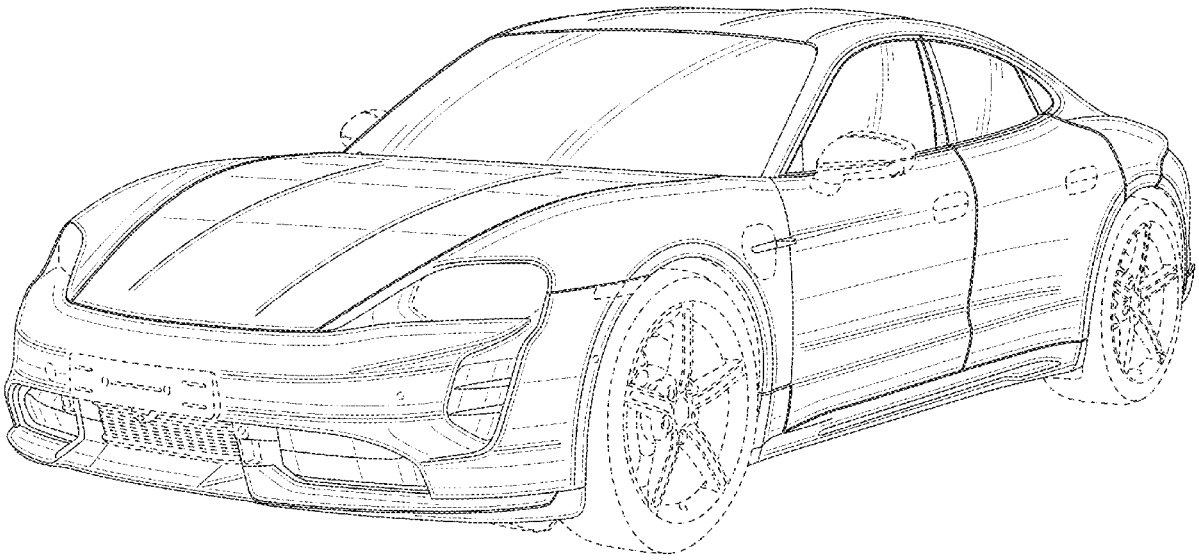

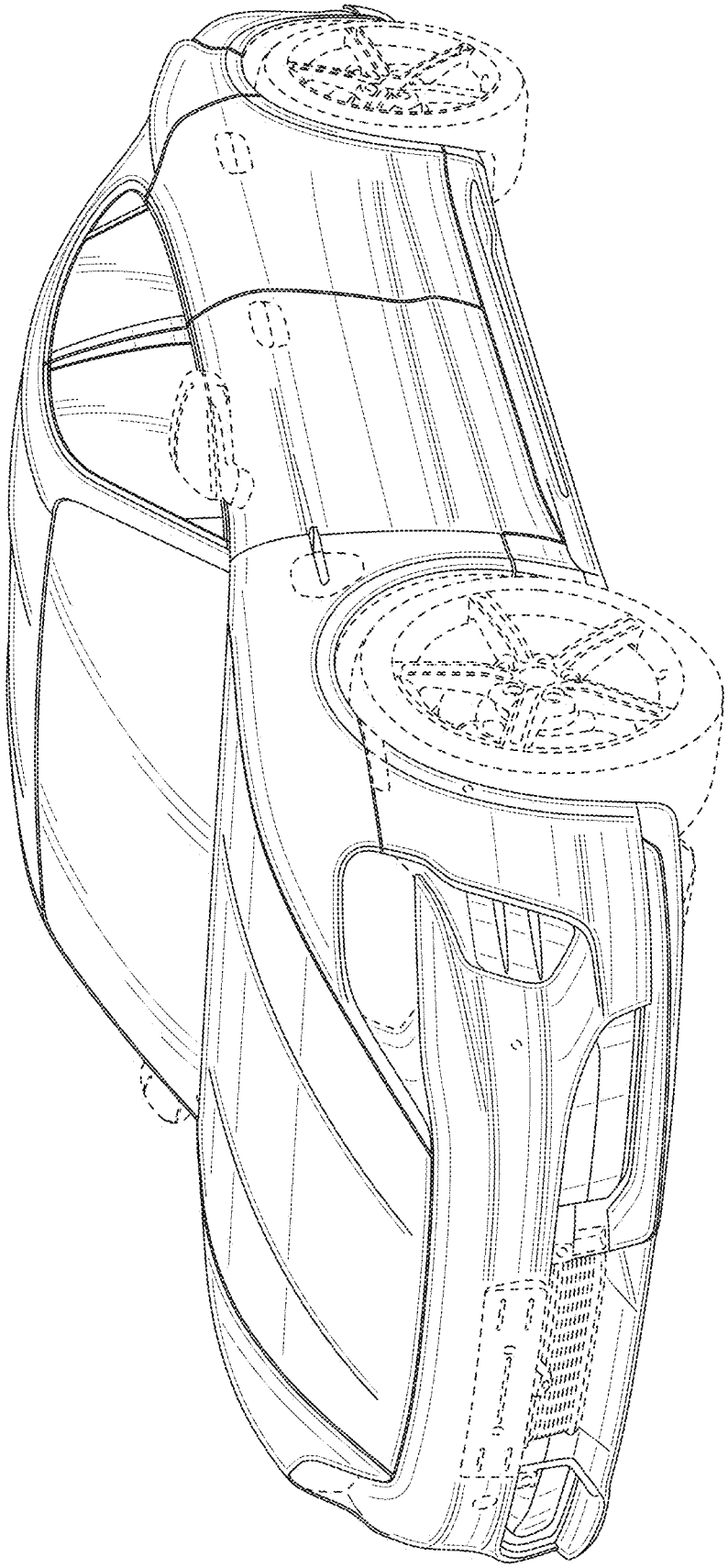

FIG. 1

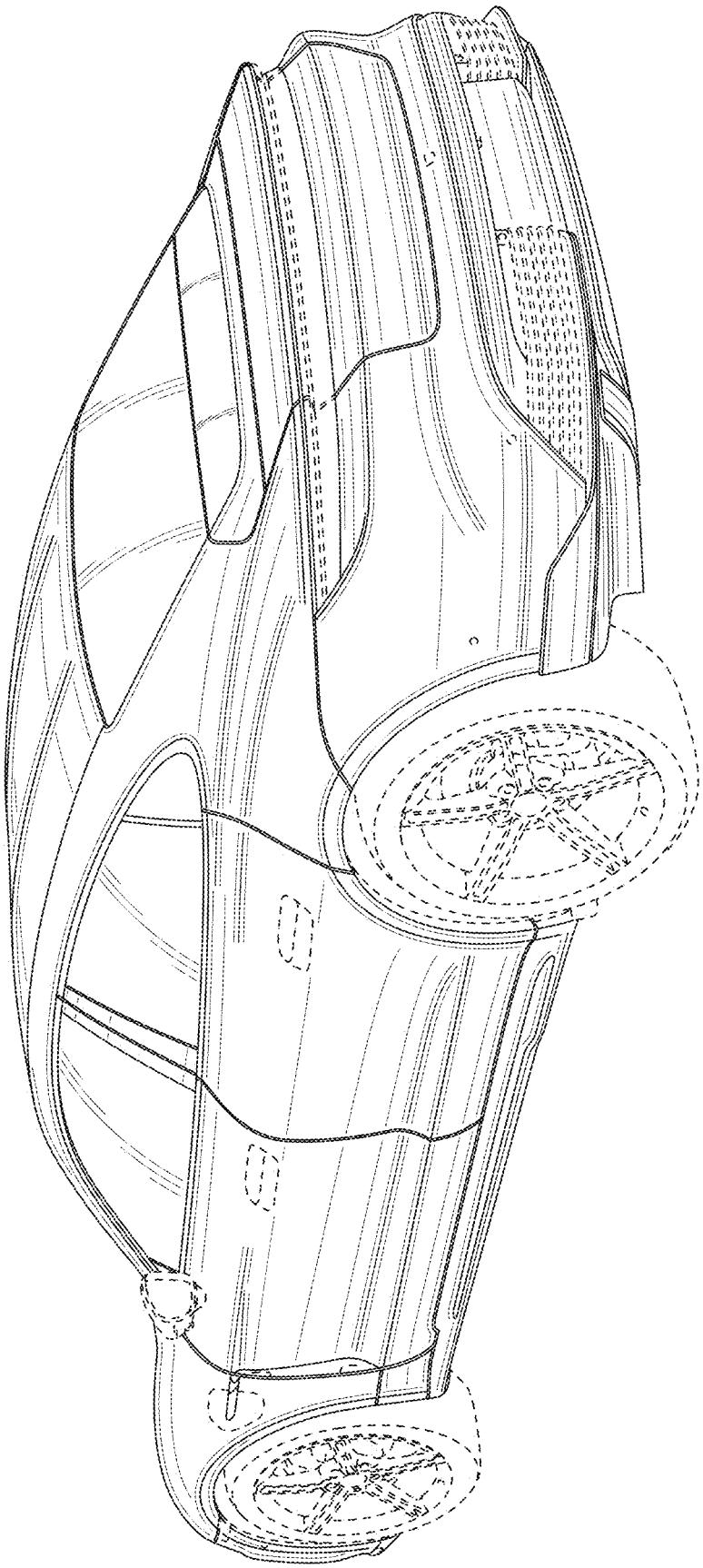

FIG. 2

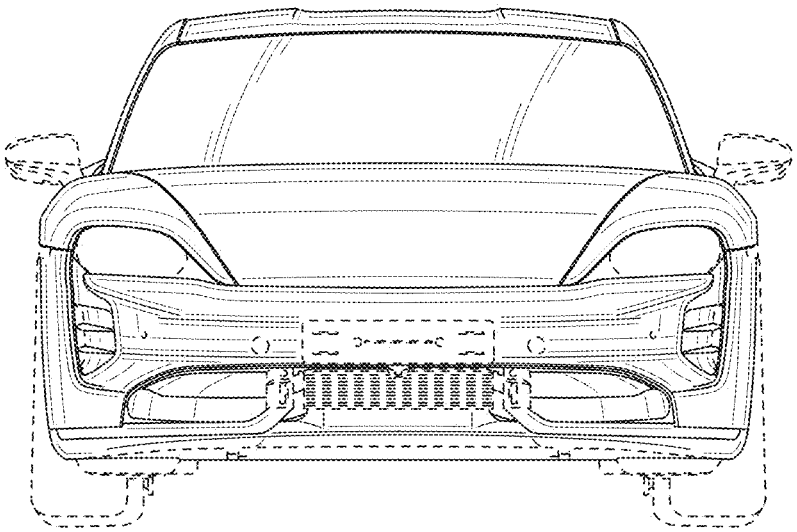

FIG. 3

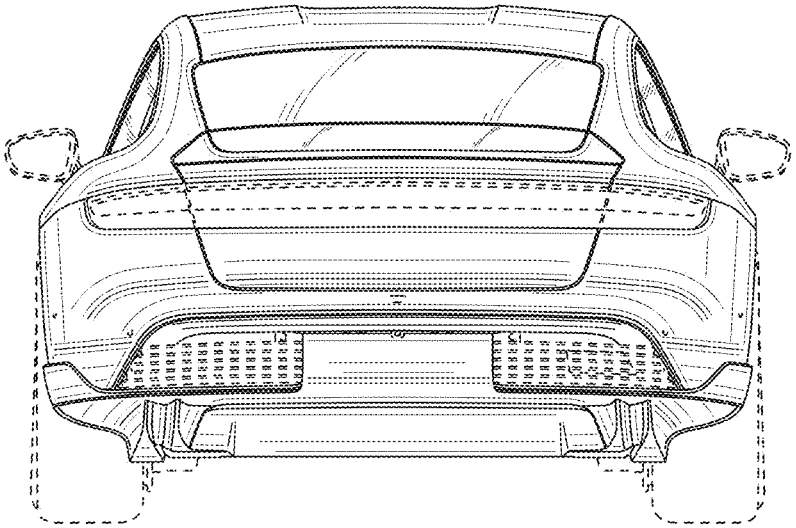

FIG. 4

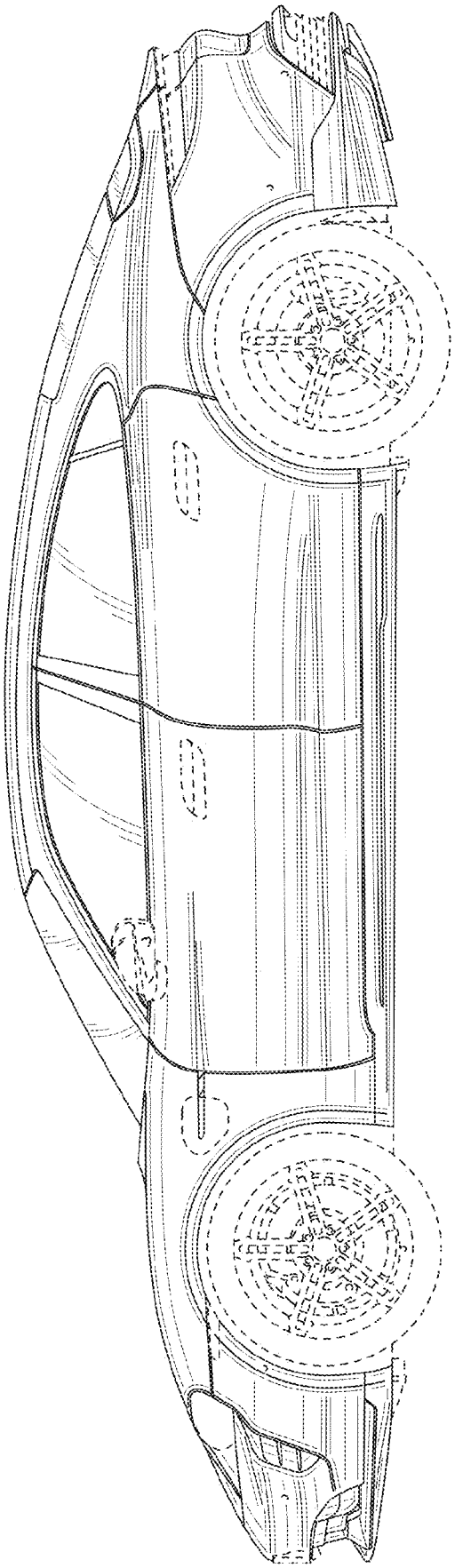

FIG. 5

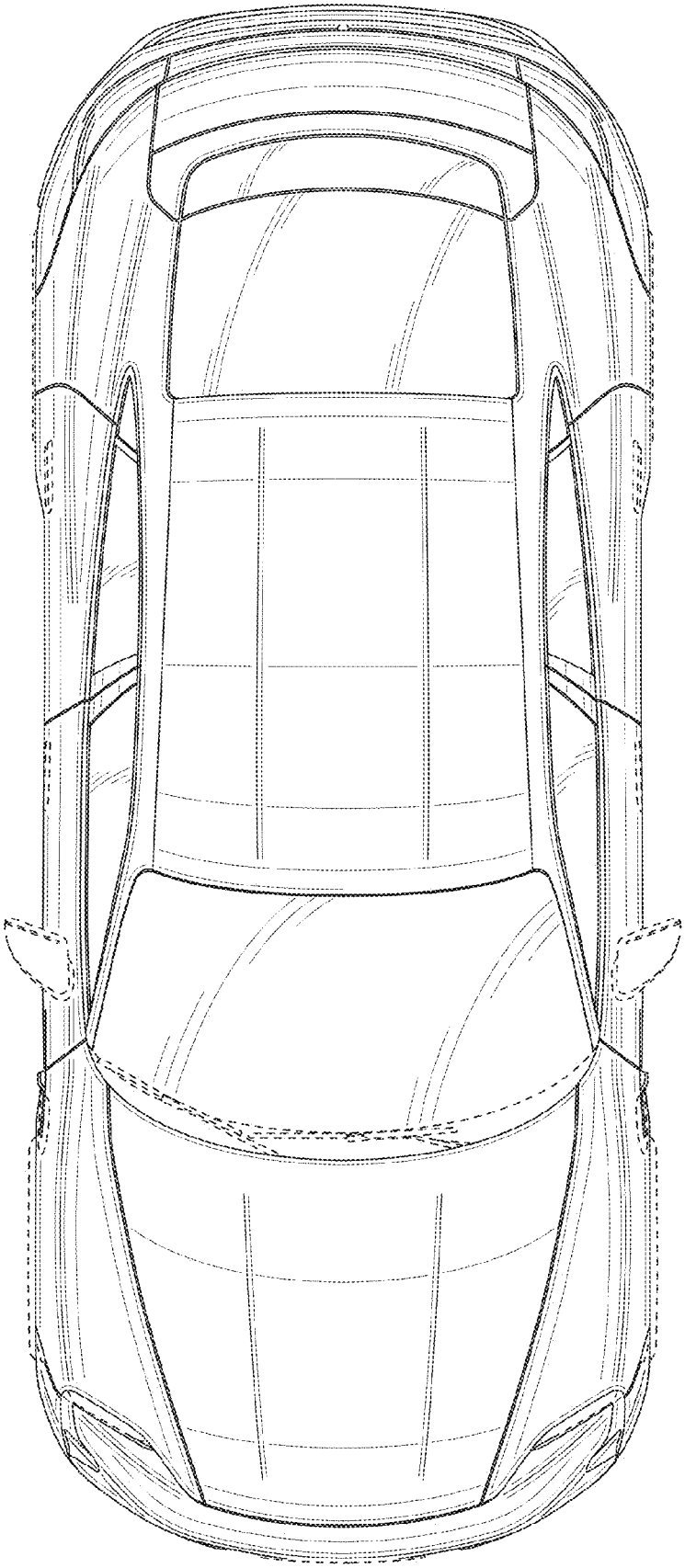

FIG. 6