United States Patent [19]

Rabichev et al.

[11] **3,773,049**

[45] **Nov. 20, 1973**

[54] **APPARATUS FOR THE TREATMENT OF NEUROPSYCHIC AND SOMATIC DISEASES WITH HEAT, LIGHT, SOUND AND VHF ELECTROMAGNETIC RADIATION**

[76] Inventors: **Lev Yakovlevich Rabichev,** ulitsa 25 Oktyabrya, 80, kv. 7; **Vladislav Fedorovich Vasiliev,** ulitsa 25 Oktyabrya, 46, kv. 3; **Alexandr Sergeevich Putilin,** 1 pereulok Panfilova, 9-B, kv. 25; **Tatyana Grigorievna Ilina,** ulitsa Iskry, 25, kv. 1; **Petr Vasilievich Raku,** ulitsa Roz, 13, korpusl, kv. 73; **Leopold Pavlovich Kernitsky,** ulitsa Zelinskogo, 12, korpus4, kv. 55, all of Kishinev, U.S.S.R.

[22] Filed: **Nov. 13, 1970**

[21] Appl. No.: **89,374**

[52] **U.S. Cl.** ..... **128/362,** 128/1 C

[51] **Int. Cl.** **A61n 1/40**

[58] **Field of Search** ..... 128/1 C, 1 R, 1.3, 128/24.1, 362, 380, 399, 404, 410, 419 P, 422

[56] **References Cited**

UNITED STATES PATENTS

3,103,219	9/1963	Chadner	128/1 C
3,576,185	4/1971	Schulz et al.	128/1 C
3,213,851	10/1965	Currea	128/1 R
2,859,731	11/1958	Sutton	128/1 C
3,470,870	10/1969	Schoffer	128/1 C

FOREIGN PATENTS OR APPLICATIONS

619,129	3/1961	Italy	128/1 C
1,183,607	12/1964	Germany	128/1 C
826,766	1/1960	Great Britain	128/419 P

Primary Examiner—William E. Kamm
Attorney—Holman & Stern

[57] **ABSTRACT**

An apparatus for the treatment of neuropsychic and somatic disorders wherein light-, sound-, VHF electromagnetic field-pulses and radiation from light-, sound-, VHF electromcagnetic field- and heat-sources, respectively, are simultaneously applied by means of a control unit to the patient's central nervous system with a predermined repetition rate. The light radiation and sound radiation sources are made so as to exert an adequate and monotonous influence of the light-and sound-radiation on the patient's visual analyzers and auditory analyzers, respectively.

8 Claims, 2 Drawing Figures

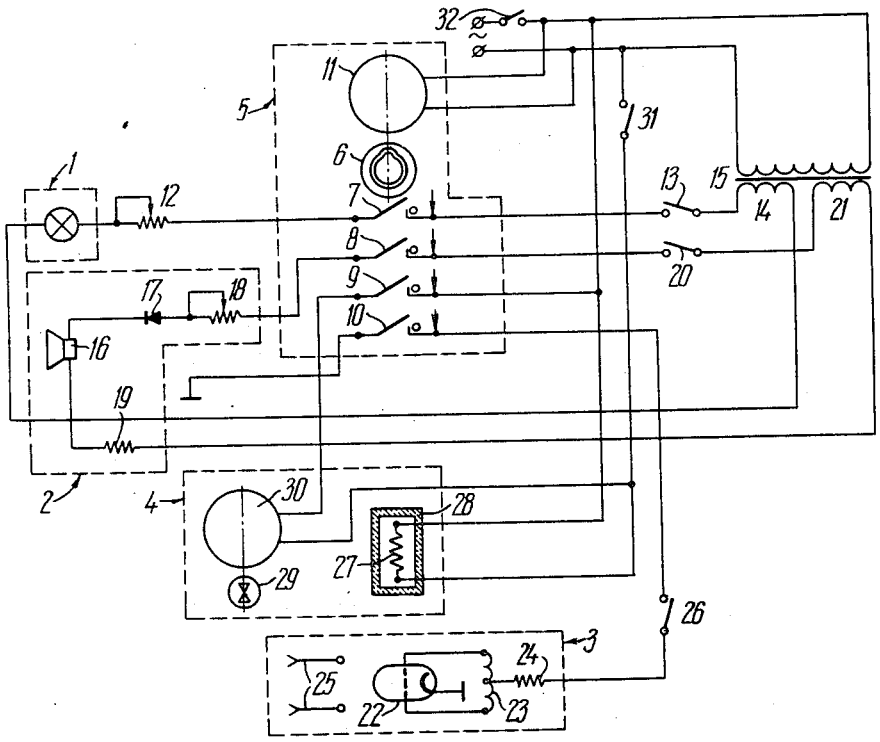

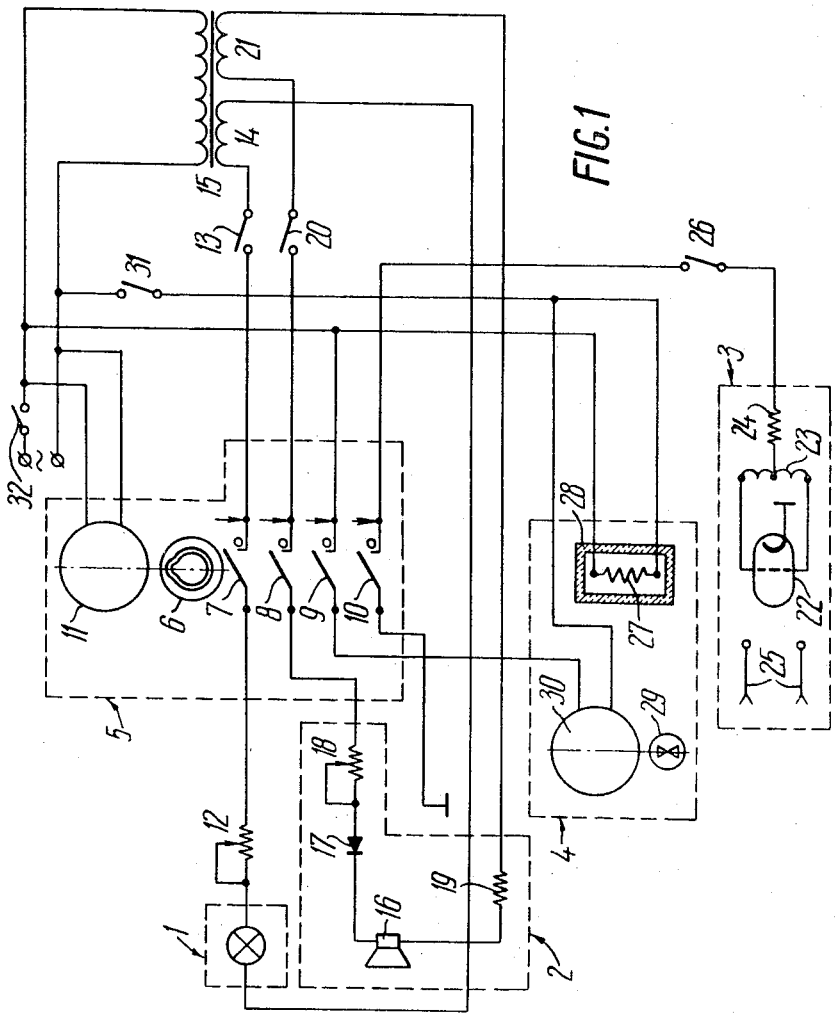
1
2
3
4
5
6
7
8
9
10
11
12
13
14
15
16
17
18
19
20
21
22
23
24
25
26
27
28
29
30
31
32

FIG. 1

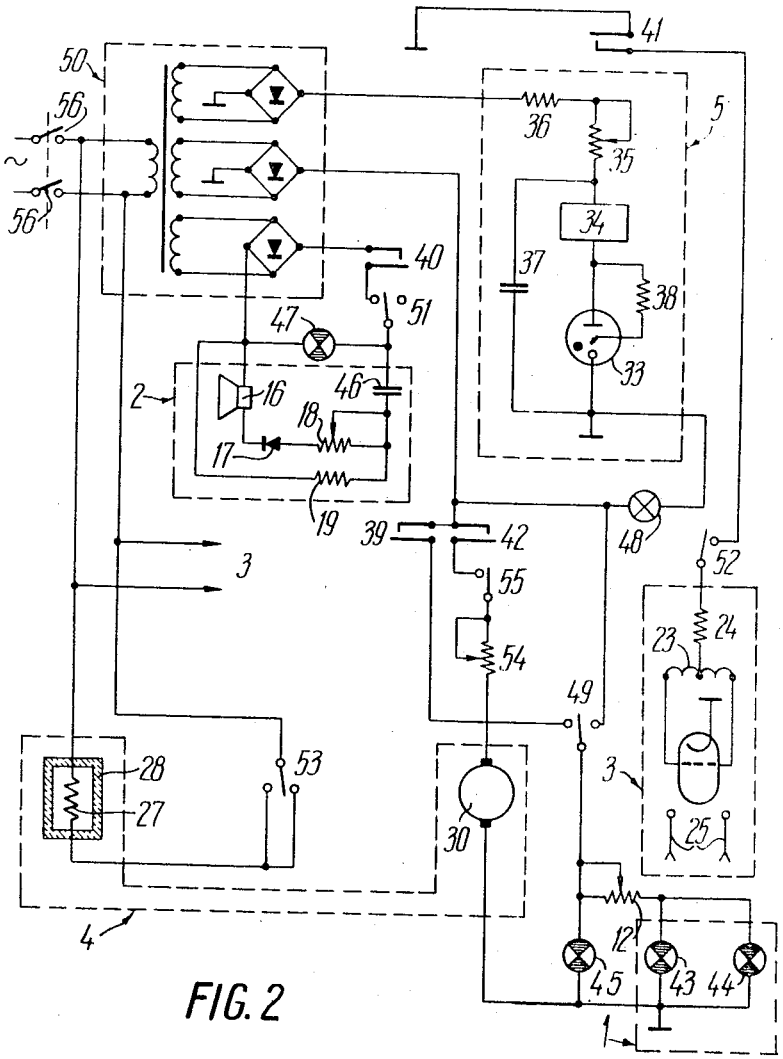
41
50
56
56
36
35
5
34
37
38
33
40
51
47
2
16
46
18
17
19
39
42
48
52
3
55
54
23
24
49
3
28
27
53
30
25
4
12
45
43
44
1

FIG. 2

APPARATUS FOR THE TREATMENT OF NEUROPSYCHIC AND SOMATIC DISEASES WITH HEAT, LIGHT, SOUND AND VHF ELECTROMAGNETIC RADIATION

The present invention relates to physiotherapeutic apparatus, and more particularly to apparatus for the treatment of inorganically caused neuropsychic and somatic disorders, such as neuroses, psychoses, insomnia, hypertension, tonic disease, ulcer, stammering, bronchial asthma, intestinal dyskinesia, cardioneurosis, vegeto-vascular neurosis, eczema, asthenic and reactive disturbances. The apparatus of the present invention may find successful application in sports- and military medicine, i.e., in such situations as:

the start of a crucial sports competition or a similar sports demonstration;

cases of extremely high neurotension, as observed in combatant unit soldiers and in patients of field military hospitals.

Known are apparatus for the treatment of neuropsychic and somatic disorders in which light and sound pulses are emitted by light radiation sources and sound radiation sources to act upon the patient's central nervous system.

In said apparatus use is made of light- and sound radiation sources. The sound emission includes speech sounds recorded on a magnetic tape, as well as ultrasound. Under the treatment conditions the patient's head and the upper portion of his body are enclosed in a chamber which is made in the form of a kind of sarcophagus.

Thus in the above-said apparatus, only one curative factor is employed, namely that of speech formulae of a hypnotic suggestion as recorded on a magnetic tape and designed to produce a suggestive effect via channels of the second signal system (intellect, mind, psyche). Whenever the patient is psychologically reluctant to admit suggestive formulae, such an apparatus is of no avail as far as that particular case is concerned. Light- and ultrasound emission, used in the apparatus of the prior art, do not, in fact, play an independent curative role, but are rather of an auxiliary nature, for their action on the patient's central nervous system is continuous and intended to inhibit the same so that an appropriate background could be prepared to facilitate the suggestive treatment itself. The background factors themselves are physiologically inadequate being beyond the ranges of aural and ocular perception and sometimes involving an adverse effect upon the patient's condition. It should be stressed that the chamber used in accomodating the patient's head and the upper portion of his body has an unfavourable effect upon the patient, because it is made, as said above in the form of a sarcophagus and may give rise to negative phychic responses.

The present invention is aimed at providing an apparatus for the treatment of neuropsychic and somatic diseases, which ensures a rhythmic and remotely controlled action of at least three physical factors upon the patient's nervous system.

With this and other objects in view, the invention resides in the apparatus for the treatment of neuropsychic and somatic diseases in which light pulses and sound pulses from light sources and sound sources, respectively, act upon the patient's central nervous system, wherein there is provided an VHF electromagnetic field source installed in the immediate proximity of the patient's ganglia, and a control unit which is electrically connected with the sources of light radiation, sound radiation and VHF electromagnetic field radiation and which effects control over these sources so as to enable said sources under control to send to the central nervous system simultaneous light pulses, sound pulses and VHF electromagnetic pulses at an assigned pulse repetition rate thereby causing a state of inhibition in the patient under treatment, the light radiation sources and sound radiation sources being embodied in such a way that an adequate and monotonous influence of the sound and light radiations is exerted upon the patient's visual analyser and auditory analyser.

In order to intensify the curative effect and to make for an accelerated transfer from vigilance to what is nearly normal physiological sleep it is reasonable that a source of heat radiation be added and installed in the immediate proximity to the patient's skin surface, said source being electrically connected with a control unit and controlled by the latter so that heat radiation is sent to the patient's skin surface simultaneously with the pulses from the VHF electromagnetic field source, light source and sound source, said puises following at an assigned repetition rate causing the inhibition to be irradiated.

The light radiation source may be made in the form of at least one lamp, blue or green in colour, which is installed at the patient's eye level.

When using an even number of lamps, said lamps are installed symmetrically in respect of the patient's saggital sinus plane.

The control unit may be embodied as a chopper in conjunction with a cam mechanism providing for generation of pulses at a certain repetition rate.

In order to extend the pulse repetition range it is reasonable that an electronic timer be provided including at least one thyratron.

With due regard to the patient's individual features said electronic timer should be equipped with a potentiometer to control the pulse repetition rate of VHF electromagnetic field radiation, light radiation and sound radiation, as well as heat radiation, said electronic timer being electrically connected with a potentiometer.

Due to such construction the present apparatus for the treatment of neuropsychic and somatic disorders allows improvement of the mobility and intensity of nervous processes, normalization of the affected functional derangements as apparent from the removal of pathological symptoms, decrease in manifestations of autonomic angioneurosis and neurotic symptoms, a longer and sounder sleep.

Other objects and advantages of the present invention will be made apparent upon a consideration of the specific illustrative embodiments as described herein with reference to the drawings, wherein:

FIG.I shows a schematic electrical circuit of one embodiment of an apparatus for the treatment of neuropsychic and somatic disorders;

FIG.2 is another embodiment of same.

The apparatus for the treatment of neuropsychic disorders comprises, in accordance with the present invention, source I through 4 (FIGS I and 2) of light radiation, sound radiation and VHF electromagnetic field radiation, heat radiation respectively, wherein light pulses, sound pulses, VHF electromagnetic pulses and

heat radiation act upon the central nervous system of a patient (not shown in the drawing). The apparatus also includes control unit **5** which is electrically connected with said sources I through **4** and controls the same so as to enable them to send to the central nervous system simultaneous light radiation pulses, sound radiation pulses, heat radiation pulses and VHF electromagnetic field radiation pulses at an assigned pulse repetition rate thereby causing a state of inhibition in the patient under treatment.

The sources I through **4** are oriented in respect of the patient as follows:

the light radiation source I is placed at the level of the patient's eyes at a distance of 40 to 50 cm therefrom;

the sound radiation source **2** is placed in the proximity of the patient under treatment at a distance of 40 to 50 cm him;

the VHF electromagnetic field radiation source **3** is placed in the immediate proximity of the patient's ganglia, preferably at the level of carotid sinuses, 3 to 4 cm away from the patient's skin surface, as is the case with the present apparatus;

the heat radiation source **4** is also placed close to the patient's skin surface, i.e., in the immediate proximity of the face skin surface.

The sources I and **2** of light radiation and sound radiation, respectively, provide for an adequate and monotonous action thereof upon the visual and auditory analyzers.

According to the first embodiment of the apparatus for the treatment of neuropsychic and somatic disorders (FIG.I) the control unit **5** is a chopper with a cam mechanism **6** and contacts **7** through **10**. The cams of the cam mechanism **6** are rotated by an electric motor II fed from a power supply unit, which is mains supply in this specific case. The electric motor II makes 60 r.p.m. thereby providing for an assigned pulse repetion rate of sixty pulses per minute of light radiation pulses, sound radiation pulses, VHF electromagnetic field radiation pulses and heat radiation pulses.

Light radiation source I is an incandescent lamp, blue in colour, which is electrically connected with a secondary winding **14** of a transformer **15** through a resistor **12** which serves to control the intensity of light radiation, contacts **7** of the vibrator and a switch **13**, the transformer **15** being in turn electrically connected with the a.c. mains.

Sound radiation source **2** is a small-size loudspeaker **16** which is electrically connected with another secondary winding **21** of the transformer **15** through a diode **17**, variable resistor **18**, constant resistor **19**, contacts **8** of the vibrator and switch **20**. The sound radiation source provides for an imitation of rain drop noise. Besides, it can be employed to imitate the noise of the surf.

The VHF electromagnetic field radiation sources **3** is a push-pull oscillator **22** with an inductance coil **23** and resistor **24**. Electrodes **25** make the load of said oscillator **22**. The VHF electromagnetic field source is fitted with a switch **26** and controlled by the contacts **10** of the chopper.

The heat radiation source **4** is a hot spiral wire **27** which is surrounded by a screen **28** made of thermal insulator. The heat flow from the hot wire is removed by means of a blower **29** rotated by an electric motor **30**. The heat radiation **4** is controlled by a switch **31** via the contacts **9** of the vibrator.

The present device is equipped with a common mains switch **32**. The sources I, **2** and **4** of light radiation, sound radiation and heat radiation, respectively, are mounted in the same casing (not shown in the drawing).

According to the second embodiment of the present apparatus the control unit **5** is an electronic timer made of cold cathode thyratron **33** with an electromagnetic relay **34**, potentiometer **35** and resistor **36** in the plate circuit thereof. The electronic timer also includes a capacitor **37** and a resistor **38**. The electronic timer has contacts **39** through **42**. The potentiometer **35** controls the assigned pulses repetition rate of VHF electromagnetic field radiation, light radiation, sound radiation and heat radiation within the **10** to **100** pulses per second range, depending upon the patient's individual features.

The light radiation source I includes two incandescent lamps **43** and **44**, green in colour, which are installed symmetrically in respect of the patient's sagittal sinus plane, at the eye level. This position provides for a better therapeutic effect because the patient is no longer subject to light beam convergence action whenever use is made of the Paurquignet effect. The light radiation intensity is controlled by the resistor **12**. The light source I is equipped with a signal lamp **45**.

The sound radiation source **2** is not substantially different from that in the first embodyment as described above. The difference between them consists in the presence of a capacitor **46**. The sound radiation source **2** is equipped with a signal lamp **47**.

The VHF electromagnetic field source is the same as that of the first embodiment, with a signal lamp **48** added.

The heat radiation source **4** is the same as that of the first embodiment but the blower is not shown in FIG.2.

The light radiation source I is electrically connected with a bridge-type d.c. power supply unit **50** through a resistor **12**, switch **49** and contacts **39** of the electronic timer.

The sound radiation source **2** is electrically connected with the d.c. power supply unit **50** through a switch **51** and contacts **40** of the electronic timer.

The VHF electromagnetic field source **3** is equipped with a switch **52**.

The hot spiral wire **27** of the heat radiation source **4** is fed from the mains through a switch **53**, while the electric motor **30** of the blower **29** is fed from the d.c. power supply unit **50** via a variable resistor **54**, switch **55** and contacts **42** of the electronic timer.

In accordance with the second embodiment of the present apparatus it can be switched on and off by means of the mains switch **56**.

The principle of operation of the apparatus according to the first embodiments as follows.

The patient is either put to bed or seated in a deep arm-chair. The apparatus is moved to the head of said bed or chair. The electrodes **25** of the VHF electromagnetic field source are mounted at the level of carotid sinuses **3** to **4** centimetres away from the surfice of the neck skin.

The casing, with the sources I, **2** and **4** of light radiation, sound radiation and heat radiation mounted therein, is placed above the patient's head at a distance from 40 to 50 centimetres from his face. The apparatus is switched on by means of the mains switch **32**. The switches **13**, **20**, **26** and **31** are used to turn on the

sources I through 4 of light radiation, sound radiation, VHF electromagnetic field radiation and heat radiation.

Due to this procedure the patient's receptors are simultaneously acted upon by 60 p/min pulses of blue light radiation, sound radiation which is made similar to the rain drop noise, VHF electromagnetic field radiation as well as by heat radiation, all these having an effect on the retina, on the auditory sensory endings, carotide sensory ganglia and thermal receptors in the face skin, respectively.

A simultaneous transmission of the pulses and heat radiation is due to contacts **7** through **10** of the vibrator. The length of the pulse effect added to that of heat radiation as obtained by means of the cam mechanism **6** amounts to 15×10^{-2} sec.

The nerve pulses due to the action by stimuli, such as pulses of light radiation, sound radiation, VHF electromagnetic pulse radiation, as well as heat radiation, are transmitted to the thalamus opticus (sensory collector) via sensory nerve filament and sympathetic nerve trunk.

The simultaneous arrival of brain wave impulses at the thalamus opticus provides for an intensified rhythmic activity of its neural formations due to the interference effect. The rhythm of superimposed stimuli as then synchronized with the activities of the thalamus opticus neural formations (external synchronization). The rhythm as assigned by the apparatus is adopted by the subcortical neural formations being transmitted from the thalamus opticus to the subcortical fields of the visual, auditory and cutaneous analyzers. In the appropriate cortical centres of visual, auditory, and cutaneous analyzers. In the appropriate cortical centres of visual analysers the mono-tonous pulses cause focuses of inhibition to be formed which would intensify in strength and irradiate in space in the course of the same treatment session as well as due to the successive sessions. The primary focus inhibition, once and whenever it occured, would spread all over the cortical field bringing about natural sleep. During the initial treatment sessions the extent of irradiation may be quite insignificant because of the patient's inhibition inertia due to this or that neuropsychic disorder in the patient under treatment. In the course of successive treatment session the trace responses as retained in above-said cortical centres would cause the stimuli to be accumulated so that the inhibition tends to be intensified.

Besides, in the course of successive treatment sessions new conditioned reflex associations are put into effect either because of the procedure itself or due to its specific time, or because of any other isolated factor, all contributing to the irradiation of inhibition phenomena throughout the cortical centres in the cerebral hemispheres.

The whole system of stimuli which is addressed to the patient's organism makes use of the first signal system channels, i.e., the receptor zones of the appropriate analyzers, so that the second signal system channels (mind, intellect, psyche) are avoided thereby providing for a curative effect, no matter the patient's psychic condition or his attitude towards the treatment procedure. Besides, the second signal system channels, once unblocked, affords some opportunities for a simultaneous suggestive and rhythm therapy action thereby increasing the treatment effect.

The present invention makes use of a plurality of sources which are distant stimuli of different physical nature being such oscillatory phenomena as act upon the receptors to the adequate physiologic extents giving rise to no alterations which would exceed the physiologic constants limits involved. That is why the action exerted upon the patient's organism is mild and humane. Besides, provision is made both for a separate control of every factor and for a joint application of a required combination thereof so that the electrohypnotic treatment could be quite individual.

The second embodiment of this apparatus is based on the same principles of operation as the first embodiment thereof. The difference can be described as follows.

By means of a potentiometer **35** in conjunction with the electronic timer the pulse repetition rate of light pulses, sound pulses, VHF electromagnetic field pulses, as well as heat radiation, can be made to vary with due regard to the patient's individual characteristics.

The possibility of alterations both in pulse repetition rate and in the operation made of the apparatus under consideration provides for a controlled variation of biorhythms in the appropriate range as suggested by the principle of rhythm assimilation named after A.A.Ukhtomsky.

In the second embodiment of the apparatus, the light radiation pulses are sent by incandescent lamps **43** and **44**, green in color, which are mounted at eye level and symmetrical with respect to sinus plane, so that the convergence effect is eliminated (the eyeball convergence would give birth to a stimulation focus thereby preventing the progress of somnolescent inhibition).

The application of green light permits utilization of Paurquignet's effect to achieve an optimum influence on the visual analyzers.

The following procedure is recommended for the treatment of neuropsychic and somatic disorders using the apparatus of the present invention.

At a first treatment session the duration of the VHF exposure should be 10 minutes, at a second one - 15 minutes, at a third one - 20 minutes, at a fourth one - 25 minutes, and at all succeeding sessions it should be 30 minutes. The other radiation sources may be operated for 30 to 60 minutes. On the average, 30 minutes is required for one treatment-session. The patient may lie with his face upwards and eyes open, though it would be better for him to close his eyes to be ready to fall asleep. At the first treatment-session, the intensities of sound-, light-, and heat-radiation are selected to suit the particular patient.

Using the second embodiment of the apparatus, during the first minutes of the treatment session, the pulse repetition rate should be 20 to 40 pulses per minute (instead of 50 to 60 pulses per minute which is the normal case).

During the successive treatment-sessions the intensity of the exposure may remain the same as that used at the first session. The pulse repetition rate, however, may be gradually decreased later on from session to session.

The development of inhibition processes at a treatment-session is characterized by a very gradual progress. This manifests itself in a somewhat slower pulse, lower integument temperature and arterial pressure, relaxation of sceletal muscles, onset of somnolescence.

With each successive session the onset of all these phenomena takes less time while the phenomena themselves become more pronounced, bringing about a general improvement of the patient's state of health accompanied with a better sleep at night.

During the treatment session, the patient experiences gentle, tranquilizing sensations, which result in psychical relaxation and, gradual transference from vigilance to sleep. An active reproduction of inhibition of processes, if regularly repeated, each treatment-session makes a sort of training the patient for a better neurodynamic performance.

Clinical applications of the proposed apparatus are as follows. The apparatus of the present invention may be used for the treatment of patients in the 4 to 70 years bracket. One hundred patients, 4 to 18 years old, and 200 patients over 18 years old underwent the appropriate treatment. Among these patients were the following cases: neurasthenia, neurosis involving delusion, insomnia, asthenic, depressive and reactive states, postinfections and traumatic cerebrasthenia, diencephalic syndrome, vegeto-vascular dystonia, hypertension, bronchial asthma, stammering, rheumatic Sydenham's chorea.

The treatment was effected with respect to ambulatory clinic- and hospital patients.

No side effects, complications or harmful actions were observed.

Contraindications: infectious diseases, cancer, schizophrenia in its advanced stage (e.g., involving delirious phenomena), and hyperthyreosis.

The apparatus of the present invention for treating neuropsychic and somatic diseases is a physical therapy apparatus to be used for treating insomnia, hypertension, infantile stammering, and other diseases arising from nervous exhaustion and prostration, nervous break-down.

This apparatus is reliable, convenient, safe and simple to control and use, portable, and if necessary, may be placed at the bed-head when dealing with a bed case.

The use of the apparatus is not confined to any age-bracket. Even infants were effectively treated. The apparatus may be used in hospitals as well as in outpatient clinics.

The operation of the apparatus is quite economical: its power consumption is very small. The treatment sessions are effected by para medical personnel. Not to disturb the patient a remote control from an adjacent room may be exercised.

For the first time in medical practice, thanks to the apparatus of the present invention, use is made of a complex of four physical factors acting simultaneously on the respective receptors, said factors operating with predetermined rhythm pattern, and the sources of respective radiation being placed at a predetermined distance from the patient's receptors, so that it could bring about such a state of the nervous system which is characteristic of rest and sleep.

The synergetic action of the factors used in the apparatus result not in a simple sum of respective effects produced by each of said factors, but creates quite a new qualitative phenomenon, wherein interference - and resonance-processes, associated with the radiation from the pertinent sources, cause the inhibition process to be irradiated within the brain centres, which is a distinguishing feature of the present type rhythm therapy.

What is claimed is:

1. An apparatus for the treatment of neuropsychic and somatic diseases, said apparatus comprising a control unit means for simultaneously periodically activating apparatus connected thereto in a pulsed manner at a selected repetition rate; a light-radiation source essentially comprising at least one electric bulb electrically connected with said control unit means, such that light pulses are generated by said light-radiation source influencing the central nervous system of the patient having one of said diseases who faces said source; a sound radiation source essentially comprising an electric generator of pulse oscillations, a small dynamic loud-speaker means for converting said oscillations into acoustic signals imitating the sound of falling drops of water, said electric generator being electrically connected with said control unit means for actuation thereby whereby sound pulses of said sound-radiation source influence the central nervous system of the patient; a VHF electromagnetic-field source essentially comprising a generator of sinusoidal electric oscillations of the waves metric range, electrically connected with said control unit means and disposed in proximity to the patient's ganglia, pulses from said VHF electromagnetic field source acting upon the nervous system of the patient; said light-radiation source producing an adequate and monotonous action of the light-radiation of the patient's visual analyzer; said sound radiation source producing an adequate and monotonous influence of the sound radiation on the patient's auditory analyzer; said control unit means controlling said light-radiation, sound-radiation and VHF electromagnetic-field source so as to provide for a simultaneous generation of said light, sound and VHF electromagnetic pulses and directing said pulses to act upon the patient's central nervous system, all said pulses following at a predetermined repetition rate and ensuring suppression of the patient's nervous activity; and a power supply means to supply said lightradiation, sound-radiation and VHF electromagnetic-field sources and said control unit.

2. An apparatus according to claim **9**, further including a heat radiation source comprising an electrical coil surrounded by a heat-insulating shield and provided with an air-forcing motor, said heat source being disposed in the proximity of the patient's integument, said motor of said heat-radiation source being electrically connected with said control unit means and controlled thereby so as to ensure a heat irradiation flow onto the patient's integument at the same time as said VHF electromagnetic-field pulses and sound pulses are sent at an assigned repetition rate, so as to contribute to the inhibition of the patient's nervous activity.

3. An apparatus according to claim **1**, wherein said light-radiation source comprises at least one blue-light lamp adapted to be placed at the level of the patient's eyes.

4. An apparatus according to claim **1**, wherein said light-radiation source comprises at least one green-light lamp adapted to be placed at the level of the patient's eyes.

5. An apparatus according to claim **4**, wherein an even number of said green-light lamps are provided and are adapted to be arranged symmetrically with respect to the saggital plane of the patient and at a minimal angle relative to the axis of the respective eye.

6. An apparatus according to claim 1, wherein said electromagnetic field source comprises an oscillator means having a control means, and wherein said control unit means is a chopper provided with a rotatable cam gear having electric contacts which periodically connect said power supply source with the circuit of the incandescent lamps, with the electric generator of pulse oscillations which are converted in a small dynamic loudspeaker into acoustic signals imitating the sound of falling drops of water, as well as grounding the control means of the oscillator means.

7. An apparatus according to claim 1, wherein said electromagnetic field source comprises an oscillator means having a control means, and wherein said control unit means comprises an electronic timer means having at least one thyratron and a resistor-capacitor delay trigger circuit means therefor, said thyratron including an anode circuit comprising a series connected electro-mechanical relay having contacts connecting the power supply source with the circuit of the incandescent lamps, with the electric generator of pulse oscillations converted in a small dynamic loudspeaker into acoustic signals imitating the sound of falling drops of water, as well as grounding the control means of the oscillator means.

8. An apparatus according to claim 7, further including a heat radiation source, and wherein said electronic timer having at least one thyratron with an anode circuit comprising a series connected electro-mechanical relay having contacts connecting the power supply source with the circuit of the incandescent lamps, with the electric generator of pulse oscillations converted in a small dynamic loudspeaker into acoustic signals imitating the sound of falling drops of water, as well as grounding the grid of the oscillator means, further connects the power supply with said heat radiation source, and has a potentiometer electrically connected with said timer to provide for a predetermined repetition rate of said VHF electromagnetic-field, light and sound pulses, and for the control of said heat radiation depending on the individual features of the patient.

* * * * *