US00D669048S

(12) United States Design Patent

List et al.

(10) Patent No.: US D669,048 S

(45) Date of Patent: ** Oct. 16, 2012

(54) **DISPLAY DEVICE WITH MAGNETIC CARD READER**

(75) Inventors: **Jeremy List**, Newmarket (CA); **Alan Lok**, Markham (CA); **Ambles Kwok**, Richmond Hill (CA); **Mark Edey**, Ottawa (CA)

(73) Assignee: **Mercatus Technologies Inc.**, Toronto (CA)

(**) Term: **14 Years**

(21) Appl. No.: **29/399,303**

(22) Filed: **Aug. 11, 2011**

(30) **Foreign Application Priority Data**

Feb. 11, 2011 (CA) 139149

(51) **LOC (9) Cl.** **14-03**

(52) **U.S. Cl.** **D14/129**; D14/126

(58) **Field of Classification Search** ..... D14/125–134, D14/239, 371, 136, 374–377, 440, 450, 448, D14/336, 342; 312/7.2; 348/836, 838, 180, 348/184, 325, 739; 341/12; 248/917–924, 248/465; 345/104, 133, 156, 168, 87, 173; 720/605, 669, 600, 655; 369/99, 197; 455/344, 455/347; D21/329, 515, 577, 622, 333, 433, D21/448, 452, 450, 331; D6/477, 479, 300; 273/148 B; 446/484, 175, 356; D10/15, D10/26

See application file for complete search history.

(56) **References Cited**

U.S. PATENT DOCUMENTS

D334,567 S * 4/1993 Someya et al. D14/462
D349,252 S * 8/1994 Hurd D10/96
D360,196 S * 7/1995 Cox et al. D18/4.5
D373,576 S * 9/1996 Liggett D14/341
D483,034 S * 12/2003 Yanagisawa et al. D14/371
D522,211 S * 6/2006 Zhang et al. D1/125
D548,207 S * 8/2007 Hsiung D14/129
D587,296 S * 2/2009 Kuramochi D18/4.5
D616,840 S * 6/2010 Perrier et al. D14/126
D656,113 S * 3/2012 Perrier et al. D14/126

* cited by examiner

Primary Examiner — Raphael Barkai

(74) *Attorney, Agent, or Firm* — Osha Liang LLP

(57) **CLAIM**

The ornamental design for a display device with a magnetic card reader, as shown and described.

DESCRIPTION

FIG. **1** is a front perspective view of a display device with magnetic card reader illustrating the present design.

FIG. **2** is a right side view of the display device with magnetic card reader of FIG. **1**.

FIG. **3** is a top view of the display device with magnetic card reader of FIG. **1**.

FIG. **4** is a bottom view of the display device with magnetic card reader of FIG. **1**.

FIG. **5** is a front view of the display device with magnetic card reader of FIG. **1**.

FIG. **6** is a back view of the display device with magnetic card reader of FIG. **1**; and,

FIG. **7** is an extended view of the display device with magnetic card reader of FIG. **1**.

The design consists of the features of shape, pattern, ornament and configuration of the display device with magnetic card reader shown in solid lines in the drawings. The portions of the drawings shown in stippled lines are for illustrative purposes only and do not form part of the design.

1 Claim, 4 Drawing Sheets

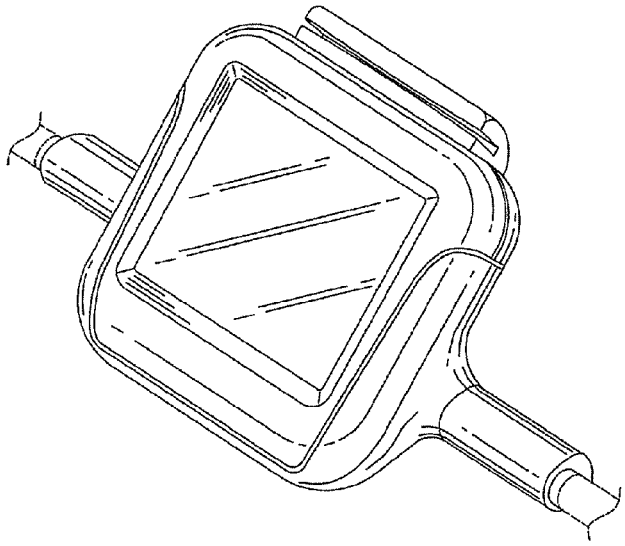

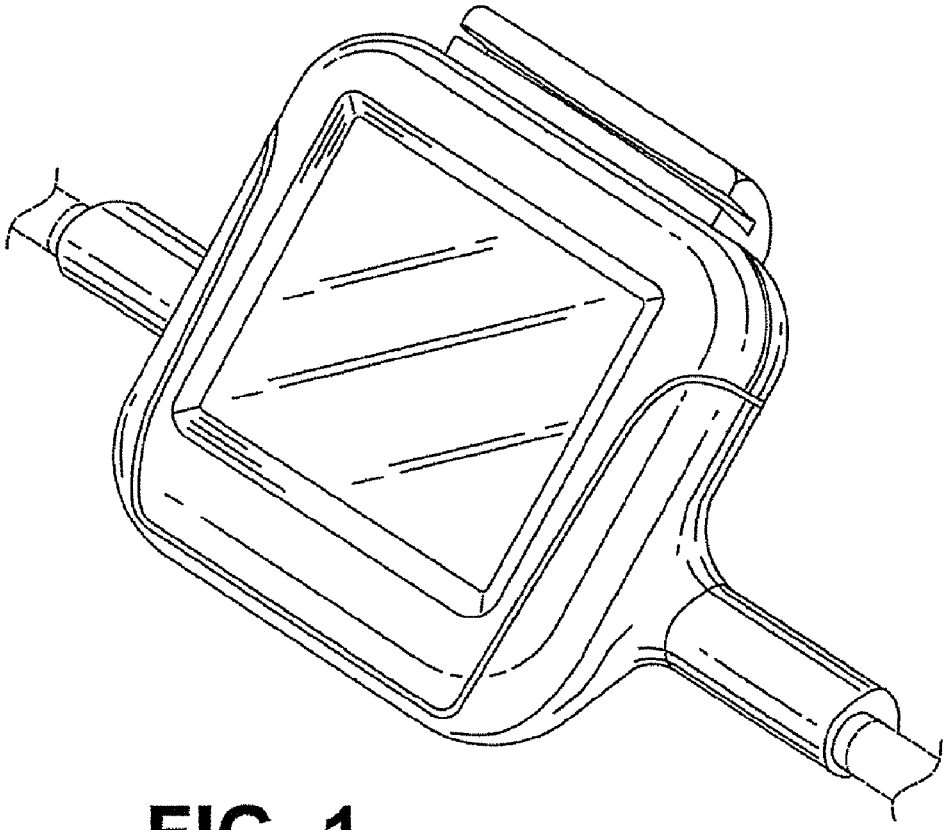

FIG. 1

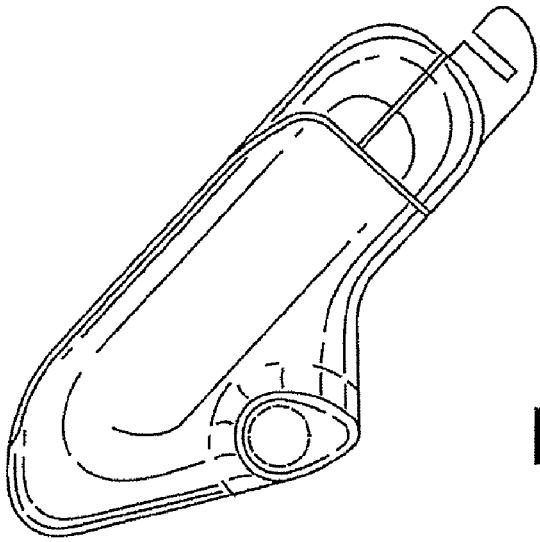

FIG. 2

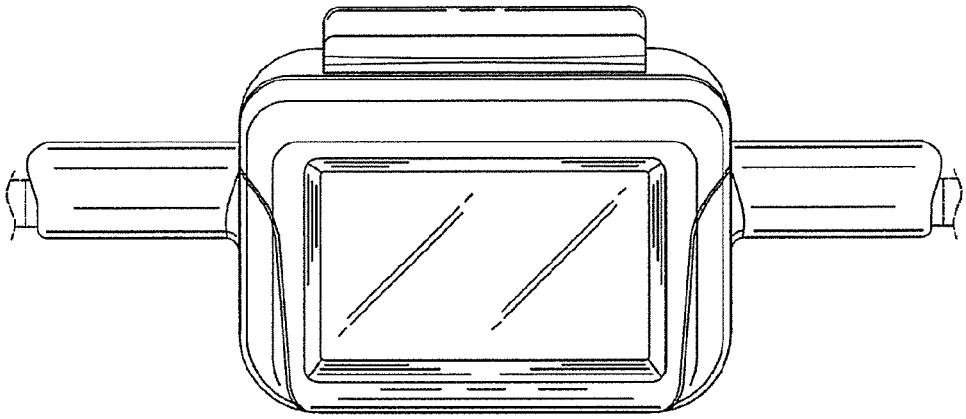

FIG. 3

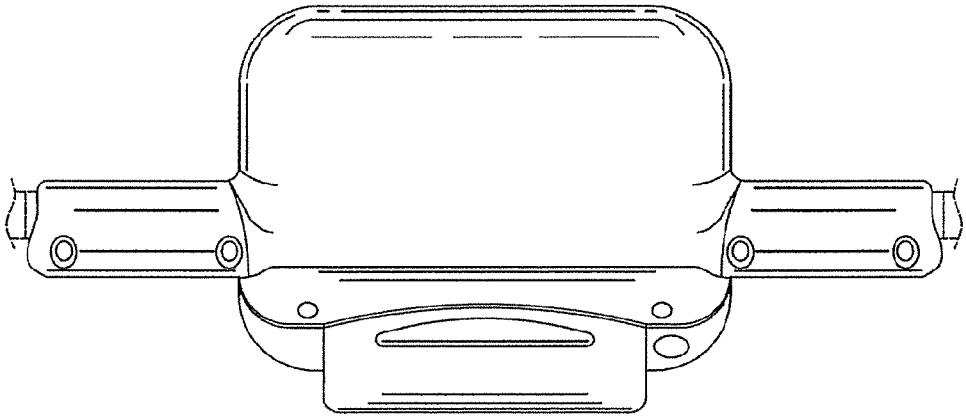

FIG. 4

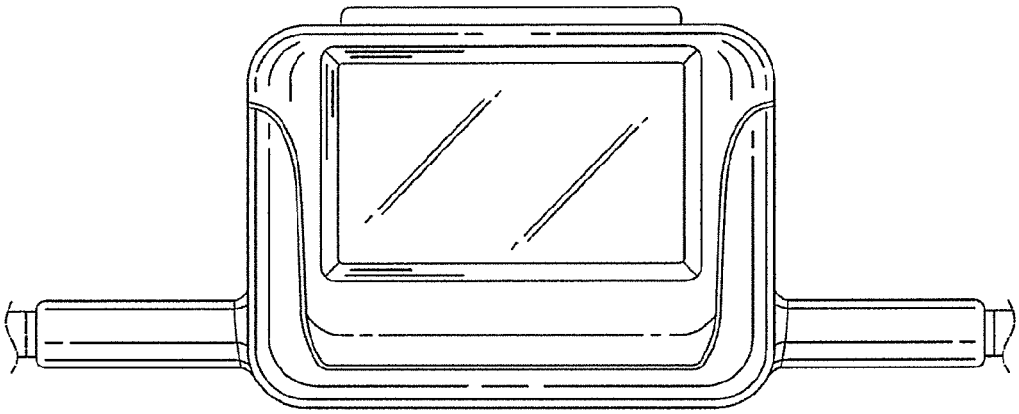

FIG. 5

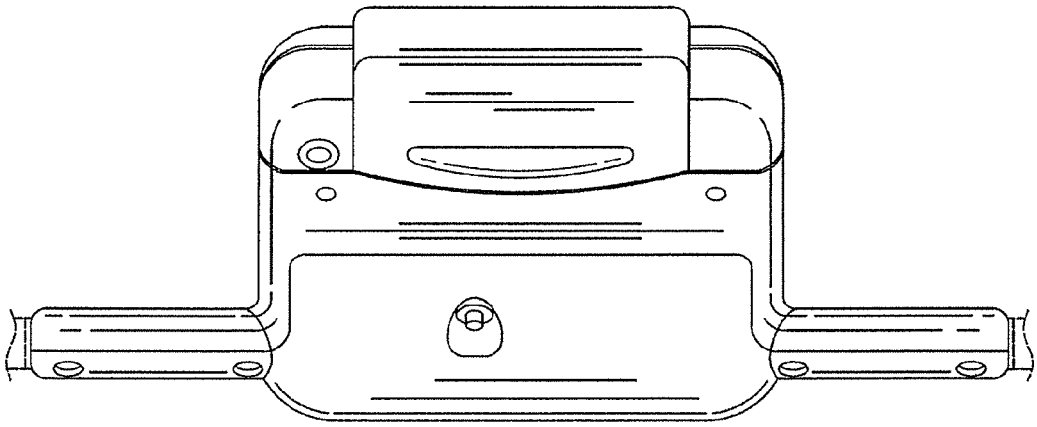

FIG. 6

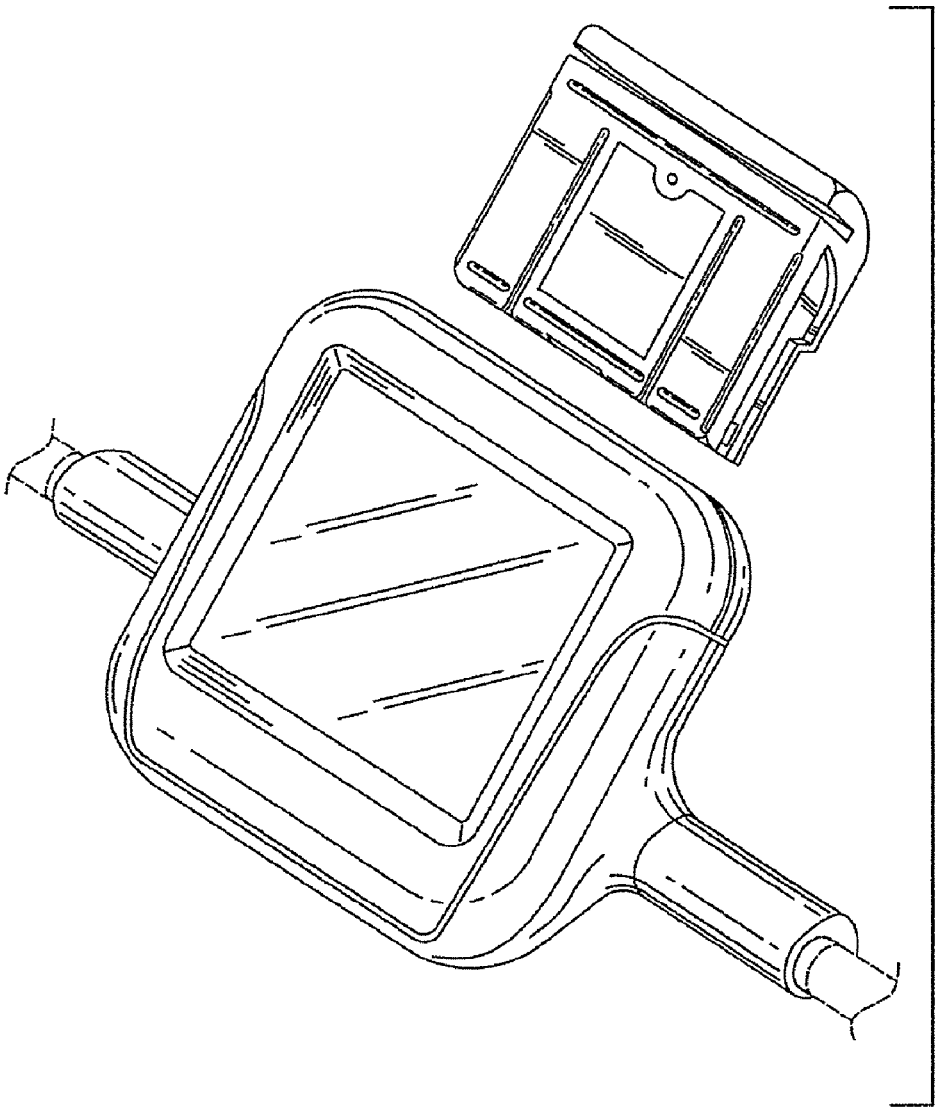

FIG. 7