Sept. 16, 1930. J. ROBINSON 1,775,947

ELECTRIC VAPORIZER

Filed May 3, 1927

Fig. 1.

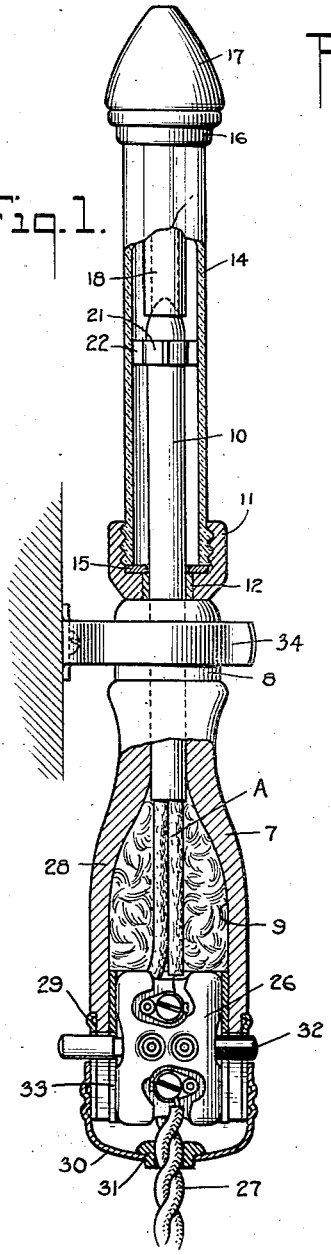

Fig. 2.

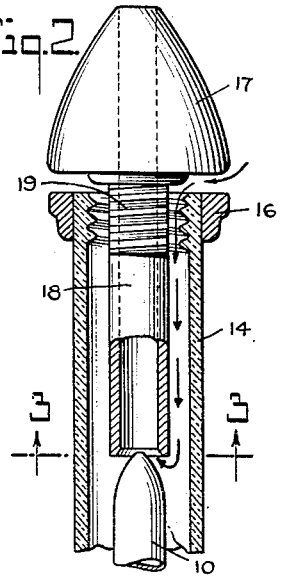

Fig. 3.

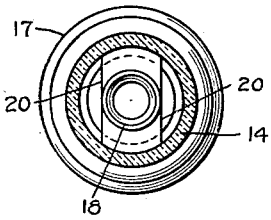

Fig. 4.

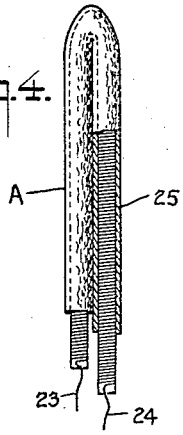

Fig. 5.

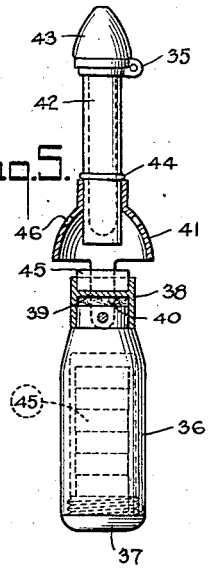

INVENTOR
Joseph Robinson,
BY
Watson, Cole, Grindle & Watson
ATTORNEY

Patented Sept. 16, 1930 1,775,947

UNITED STATES PATENT OFFICE

JOSEPH ROBINSON, OF NEW YORK, N. Y., ASSIGNOR OF ONE-FOURTH TO ROY M. WOLVIN, OF NEW YORK, N. Y.

ELECTRIC VAPORIZER

Application filed May 3, 1927. Serial No. 188,559.

My invention relates to vaporizing devices for holding medicinal compounds which are electrically or otherwise heated to produce vapors for inhalation, and the general object is to provide a device of this character for individual use which may be freely handled without any possibility of being burned, and which is sanitary and very effective and so simple that anyone can use it. Instruments of this character heretofore provided are quite intricate and invariably become so hot that they cannot be comfortably handled. In them the important element of sanitation is neglected, and they are difficult to clean. To change from one compound to another without leaving particles of the previous compound remaining in these prior instruments is slow and difficult. The vapors cannot be, by the act of inhalation, quickly lifted out of them, and the result is that the vapors are not delivered to the afflicted parts hot enough or in sufficient volume to be fully effective. In my invention these essential requirements are each fully provided for in a manner that produces an extremely simple vaporizer which extended use has demonstrated to be of great effectiveness in the treatment of the afflictions for which its use is intended.

In the drawings, Figure 1 is a sectional side elevation of my invention showing it supported from a suitable hanger.

Figure 2 is an enlarged sectional view of a part of my improved vaporizer.

Figure 3 is a sectional view on the line 3—3 of Figure 2.

Figure 4 is an enlarged sectional elevation of a part of the heating element in the preferred form of my invention, and

Figure 5 is a sectional side elevation of a modification of my improvement.

My invention comprises a suitable hollow handle 7 of any desired material over the upper end of which I mount a suitable ferrule 8 to reinforce the handle. This end of the handle is provided with an opening which leads to the hollow chamber 9 in the handle. Into this opening I rigidly mount a seamless tube 10 of suitable material, preferably such as may be nickel plated or silver plated, and over this I press a thimble or seat 11, made of any desired material, such as metal or hard rubber, and carrying a reinforcing ring 12 which is pressed over the tube 10 making a liquid tight joint with the tube. The thimble is threaded, and into it I screw, so as to be liquid tight, a barrel or container 14 made of any desired material, such as glass, and carrying complimentary threads suitably provided thereon. This joint may be differently formed if desired, but it must be liquid tight and should be easily disassembled to facilitate cleaning the vaporizer. To seal the joint of the container 14 and the base 11, so that it will at all times be liquid tight, I provide a gasket 15. The upper end of the container 14 is suitably provided with threads, and also with a reinforcing or protecting ring 16 of suitable material, which ring is pressed over the end of the container or is otherwise mounted thereon or therein and the ring may, if desired, carry the threads which I have shown as being formed on the walls of the upper end of the container. The ring 16 or the upper end of the container forms a seat for the base of the nozzle 17, which is threadingly or otherwise mounted in this end of the container. The nozzle is provided with an extension or shank 18, and an opening which extends through the nozzle and the shank. The shank is adapted to form a fluid tight joint with the upper tapered end of the tube 10, as shown especially in Figures 1 and 2, when the nozzle is screwed down into tight engagement with the upper end of the container 14 and/or the ring 16. The threaded portion 19 of the nozzle is cut away at opposite sides, as shown at 20 in Figures 2 and 3, to provide the entrance of a current of air into the container at the moment of inhalation.

To protect the container 14 against lateral movement relative to the tube 10 I either extend the thimble or seat 11 a substantial distance along the container or I mount on the upper end of the tube a spider or guide ring 21 having spaced projections 22 which engage the inner walls of the container and form a support for it.

Within the tube 10 I mount a heating coil A, Figure 4, comprising a strand or strands

of suitable wire 23, wound around an asbestos or other suitable core 24, and provide it with an outer covering of asbestos or other non-heat conducting material 25. This coil is doubled or looped, as shown in Figure 4, and removably fits snugly in the tube 10 and is preferably shoved up into the tapered end of the latter. This arrangement of the tube and coil produces what may be termed the heating element of my invention, and it may be said that the coil is packed in the tube 10 by the materials 24 and 25 described. The tube 10 serves to keep the compound in the container 14 out of contact with the coil A and protects the coil from the cooling effect that would result if it had direct contact with the air currents that take place in the container on inhalation. The coil extends beyond the lower end of the tube 10 and is connected to a suitable electric switch 26, preferably of the plunger type shown, mounted in the lower end of the handle 7, and from this switch to the electric cord 27, but of course the connection may be suitably made direct to the cord if desired. As appears in Figure 1, that portion of the coil A which projects out of the lower end of the tube is surrounded by a covering or core 28 of asbestos or other non-heat conducting material to protect the handle or base 7 against heating and thus render the instrument comfortable to handle. Further protection against heating of the handle may be provided by making the number of coils on the core 24 greater per inch from a point between the bottom of the container 14 to the upper end of the tube 10, than from the bottom of the container to the switch 26, or such protection may be had by surrounding the lower part of the tube with an asbestos covering, or the tube may be made rigid with the ferrule 8 and by it held out of contact with the walls of the handle or base 7.

On the lower end of the handle I suitably mount a metallic ferrule 29, to which is secured, in any desired manner, as by threads, a metallic cap 30 carrying an insulation ring or button 31. The lower end of the handle or base 7, and of course the ferrule 29 also are slotted to receive the plunger 32 of the switch 26, around which switch an insulation covering 33 is provided, when not in use.

In operation, the container 14 is filled, with any compound desired to be used, to a point about even with the top of the ring 21, although more or less of the compound may be put in if desired. The current is then turned on through the medium of the switch 26 and when the compound is heated to the desired temperature, preferably quite hot, the nozzle 17 is screwed upwardly in the container sufficiently to permit, on inhilation, a current of air to pass in along the sides of the nozzle, as indicated by arrows in Figure 2, downwardly into contact with the compound (the air is heated as it takes this course) and thence upwardly through the shank 18 and the nozzle 17 carrying with it an abundance of the hot vapors and delivering them, while still hot, to the afflicted parts. If desired, the heating capacity of the coil A may be such that it will not excessively heat the compound regardless of how long the electric current is left on, and for some uses this may be preferable, but of course when the compound is properly heated, the current should, in any event, be turned off. By placing around the tube 10 an outer tube or shield into which the compound may enter only slowly, preferably near the base, forming a film on the tube 10, vapors may be more quickly produced.

When not in use my improved vaporizer is supported from the wall of the household medicine cabinet, or other place, by a suitable spring hanger 34, or otherwise as by an eye or hook 35, Figure 5, later described.

It will be obvious that various modifications and adaptations of the essential features of my invention may be made without departing from its spirit or scope. The tube 10 and coil A may for instance be wound around the outside of the container 14, and by simply enlarging the container, and the heating element comprising the parts A and 10, my improvement may be used to generate steam for the treatment of throat as well as head afflictions. In Figure 5 I show a specific modification of my improvement, which adapts it for use where electricity is not avialable. The handle 36 in this modification is hollow and forms a magazine in which is carried a series of fuel discs made of suitable material such as Sterno heat, or a suitable liquid for heating may be carried in the magazine if preferred. The cap 37 closes the bottom of the magazine and is secured in place in any suitable manner as by threads. On the upper end of the handle I mount a metal ferrule or stove 38 having a metallic bottom 39 between which and the upper end of the handle 36 I mount an asbestos or other non-heat conducting ring 40. I provide a cone-shaped hood or supporting member 41 and suitably secure it to opposite sides of the ferrule or stove 38. Into this hood I removably or rigidly mount a container 42 made of suitable material, such as glass, the upper end of which container is provided with a nozzle 43 and air passages similar to the construction shown in Figure 1. To position the container in respect to the stove 38 I provide it with a stop 44. In operation, one of the discs 45 is placed in the stove and lighted to heat the compound in the container. Vents 46 are provided in the hood 41 to create a draft to draw the flames up around the bottom of the container. This modified form of my invention is conveniently hung on a nail or hook by means of the perforated lug 35, and

of course the form of my invention illustrated in Figure 1 may be likewise equipped as aforesaid.

It will be observed that the form of my invention illustrated in Figure 1 may be said to comprise an elongated transparent container 14 the lower end of which is secured, so as to be fluid tight, to the upper end of a hollow wooden handle 7 out of the upper end of which handle an elongated heating element 10 projects into said container and into the medicinal compound carried therein, the upper end of the container being provided with a nozzle 17 through which the fumes of the compound that are generated by the heating element are carried on inhalation. This arrangement renders the vaporizer very convenient for use inasmuch as it provides a cool handle by which the vaporizer is held and the whole amount of the compound employed is carried in advance of the handle 7. Therefore that part of the vaporizer which carries the heating element is always a substantial distance from the user's face, rendering the instrument most convenient and comfortable for use.

What I claim is:

1. A vaporizer for generating vapors for inhalation, comprising in combination, a container for holding a medicinal compound, a nozzle through which the vapors are drawn by the act of inhalation, a seat arranged at one end of said container and forming therewith a fluid tight joint, an elongated handle carrying at one end an electric heating element, said element including a tube rigidly mounted on the upper end of said handle and extending away from said seat into said container a substantial extent, the connection between said tube and said seat being rigid and fluid tight, a device on said tube and in said container for preventing undue lateral movement of the container relative to said tube, whereby the container is protected against lateral strains, and a resistance coil extending well into said container and surrounded by said tube and protected from the air and the compound within said container by said tube.

2. A vaporizer for generating vapors for inhalation, comprising in combination, a container for holding a medicinal compound, said container being provided with a seat, an electric heating element in said container, and a nozzle threadingly connected to said seat and having an elongated shank and an opening through the nozzle and the shank, said shank extending into said container to a point preferably above the level of said compound and adjacent to said heating element, said shank having vents at opposite sides where it joins said nozzle, said nozzle being adapted on being turned in one direction to form a fluid tight joint with said container and said heating element thereby closing said vents and said opening, and on being turned in the opposite direction to open the said vents and said opening.

3. A vaporizer for generating vapors for inhalation, comprising in combination, a container for holding a medicinal compound, an elongated hollow handle on the upper end of which said container is mounted, means for preventing undue heating of said handle, a fluid tight tube extending out of the upper end of said handle into said container and said compound, a seat rigidly mounted on said tube and into which the lower end of said container is mounted in a fluid tight manner, means to relieve the container of lateral strains, a loop resistance coil in said tube and held out of contact with the air and the compound in said container by the tube, said coil comprising a wire wound around a core of low heat conducting material and covered with an outer casing of similar material, a perforated nozzle at the upper end of said container and provided with a shank, vents at opposite sides of said shank whereby on inhalation currents of air enter into said vents and pass downwardly into contact with said compound and thence upwardly through said shank and nozzle carrying with them the vapors generated by said resistance coil, a switch in the hollow of said handle for controlling the admission of electric current to said coil, and means for maintaining said switch and coil in place.

4. A vaporizer device of the class described comprising a container for holding a substance to be vaporized and the vapors therefrom, a heating element arranged therein so as to be surrounded by the substance, and means adjustably mounted on the container for controlling the entrance of air thereinto including means having a discharge passage and disposed to direct the air to a point for admixture with the heated vapors as they enter the discharge passage and cooperative with the heating element to control the exit of the mixture incident to adjustment of the air supply.

5. A vaporizer device of the class described comprising a container for holding a substance to be vaporized and the vapors therefrom, a heating element for vaporizing the substance, nozzle means cooperating with the container so as to provide an air inlet, and a discharge conduit so arranged as to effect an admixture of the air and heated vapors at a point adjacent the heating element, said conduit being adjustable relative to the heating element to control the exit of the mixture.

6. A vaporizer appliance comprising a container for holding a substance to be vaporized, a heating element for driving off vapors from the substance, a vapor discharge conduit having its entrance disposed closely adjacent to the heating element, and means for

shifting said conduit in relation to the heating element to control the operative area of its entrance.

7. A vaporizer appliance comprising a container for holding a substance to be vaporized, a heating element extending longitudinally of the substance holding container to a point between its ends, and a nozzle member having a tubular extension also extending longitudinally and into cooperative relation with the heating element so as to provide a more or less restricted entrance to said extension.

8. A vaporizer appliance comprising a container for holding a substance to be vaporized, a heating element extending longitudinally of the substance holding container to a point between its ends, a nozzle member having a tubular extension also extending longitudinally and into cooperative relation with the heating element so as to provide a more or less restricted entrance to said extension, and means for effecting movements of the extension toward or from the heating element to regulate the operative area of the entrance to said extension.

9. A vaporizer appliance comprising a container for holding a substance to be vaporized, a heating element for driving off vapors from the substance, a vapor discharge conduit having its entrance disposed closely adjacent to the heating element, and means for shifting said conduit in relation to the heating element to control the operative area of its entrance, said means constituting a nozzle with which the discharge conduit communicates.

10. A vaporizer appliance comprising a container for holding a substance to be vaporized, a heating element mounted at one end of the container and extending longitudinally thereof to a point within the same, said element being constructed to provide a seat at the end thereof, and nozzle means mounted at the other end of the container and having a discharge passage therethrough the entrance to which is adapted to cooperate with the seat on the heating element to regulate the vapor discharge from the nozzle.

11. A vaporizer appliance comprising a container for holding a substance to be vaporized, a heating element mounted at one end of the container and extending longitudinally thereof to a point within the same, said element being constructed to provide a seat at the end thereof, nozzle means mounted at the other end of the container and having a discharge passage therethrough the entrance to which is adapted to cooperate with the seat on the heating element to regulate the vapor discharge from the nozzle, and means for effecting adjustment of the nozzle to admit air into the container and regulate the vapor and air admixture discharged through the nozzle.

12. In a vaporizer device of the class described, the combination with a container adapted to hold a substance to be vaporized, a nozzle member carried thereby, and means for heating the substance in the container, said nozzle member being shiftable in one direction to permit entrance of air into the container and in the other direction to establish contact with the heating means to thereby effectively close the container against discharge of its contents.

In testimony whereof I hereunto affix my signature.

JOSEPH ROBINSON.