United States Patent

[11] 3,563,246

[72] Inventors Henry K. Puharich
Ossining;
Joseph L. Lawrence, New York, N.Y.

[21] Appl. No. 633,035
[22] Filed Apr. 24, 1967
[45] Patented Feb. 16, 1971
[73] Assignee Intelectron Corporation
New York, N.Y.
Continuation-in-part of application Ser. No. 446,267, Apr. 7, 1965, now abandoned.

[54] **METHOD AND APPARATUS FOR IMPROVING NEURAL PERFORMANCE IN HUMAN SUBJECTS BY ELECTROTHERAPY**
13 Claims, 3 Drawing Figs.

[52] U.S. Cl. 128/422; 331/47, 331/56
[51] Int. Cl. ..... H05g /00
[50] Field of Search 128/362, 380, 404, 409, 413, 419, 420, 421, 422

[56] References Cited

UNITED STATES PATENTS

502,776	8/1893	Cheverell	128/380X
1,929,752	10/1933	Marvel	
2,240,955	5/1941	Mittelmann	
2,295,585	9/1942	Lindquist	128/422X
3,267,931	8/1966	Puharich et al.	
3,384,090	5/1968	Manfredi	128/422
3,393,279	7/1968	Flanagan	

Primary Examiner—Delbert B. Lowe
Attorney—Mandeville and Schweitzer

ABSTRACT: A method of patient rehabilitation by electrotherapy including periodically electrically stimulating the patient in the region of his facial nerve system by a controlled alternating electrical treatment signal, which signal is an amplitude modulated, double sideband signal of less than 100 kHz. The treatment signal is applied to the patient's head through a pair of electrodes comprised of two bare electrodes or two insulated electrodes, or one insulated electrode and one bare electrode. The patient's head is an element in an LC series resonant circuit established with the treatment signal source.

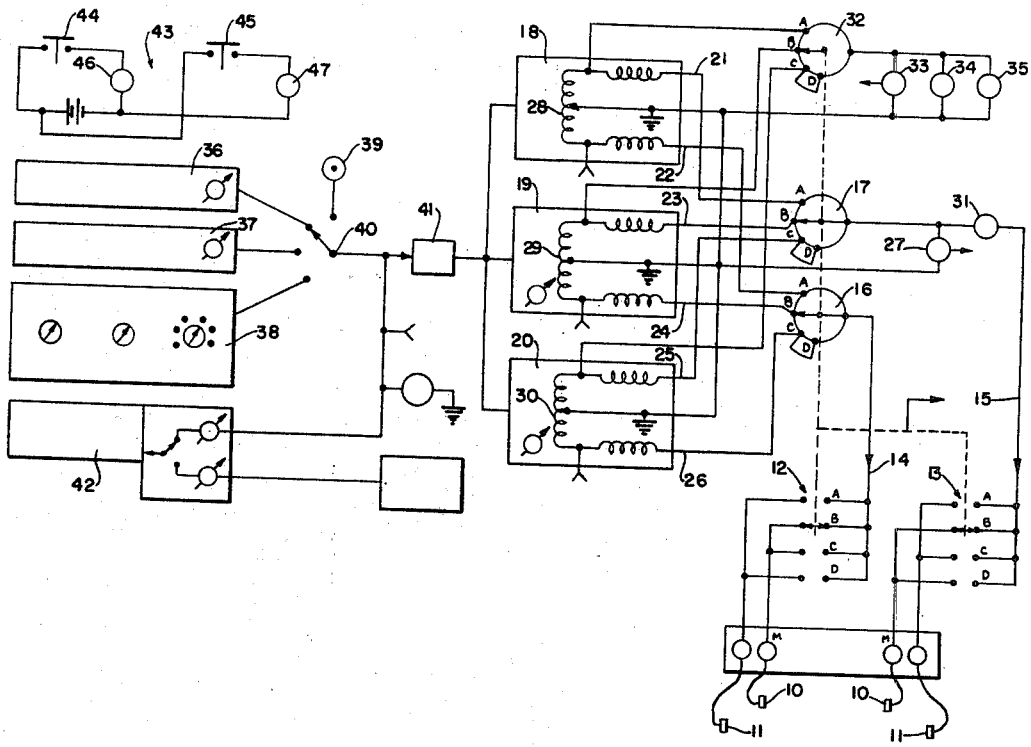

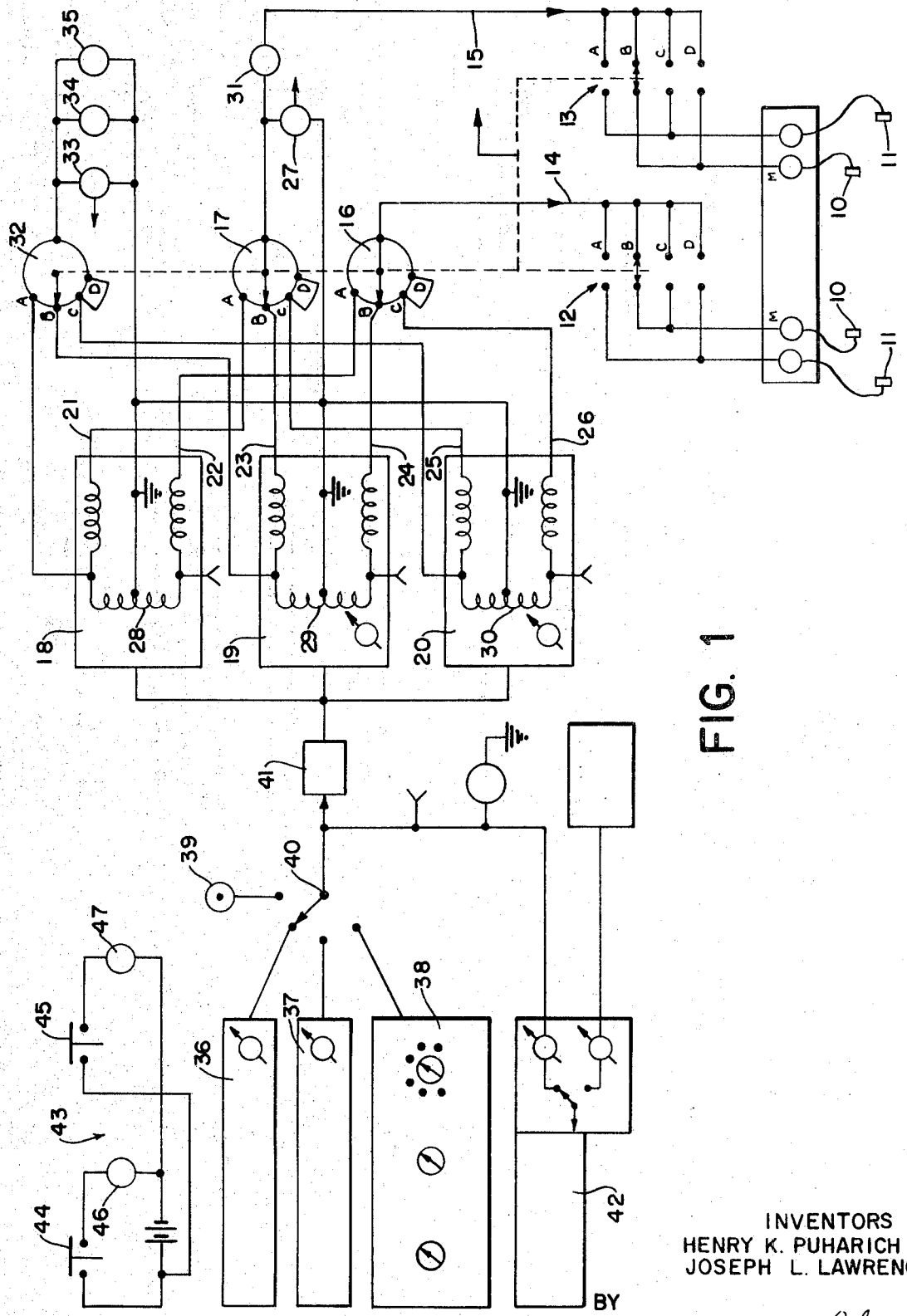

FIG. 1

INVENTORS
HENRY K. PUHARICH
JOSEPH L. LAWRENCE

BY Mandeville & Schweitzer
ATTORNEYS

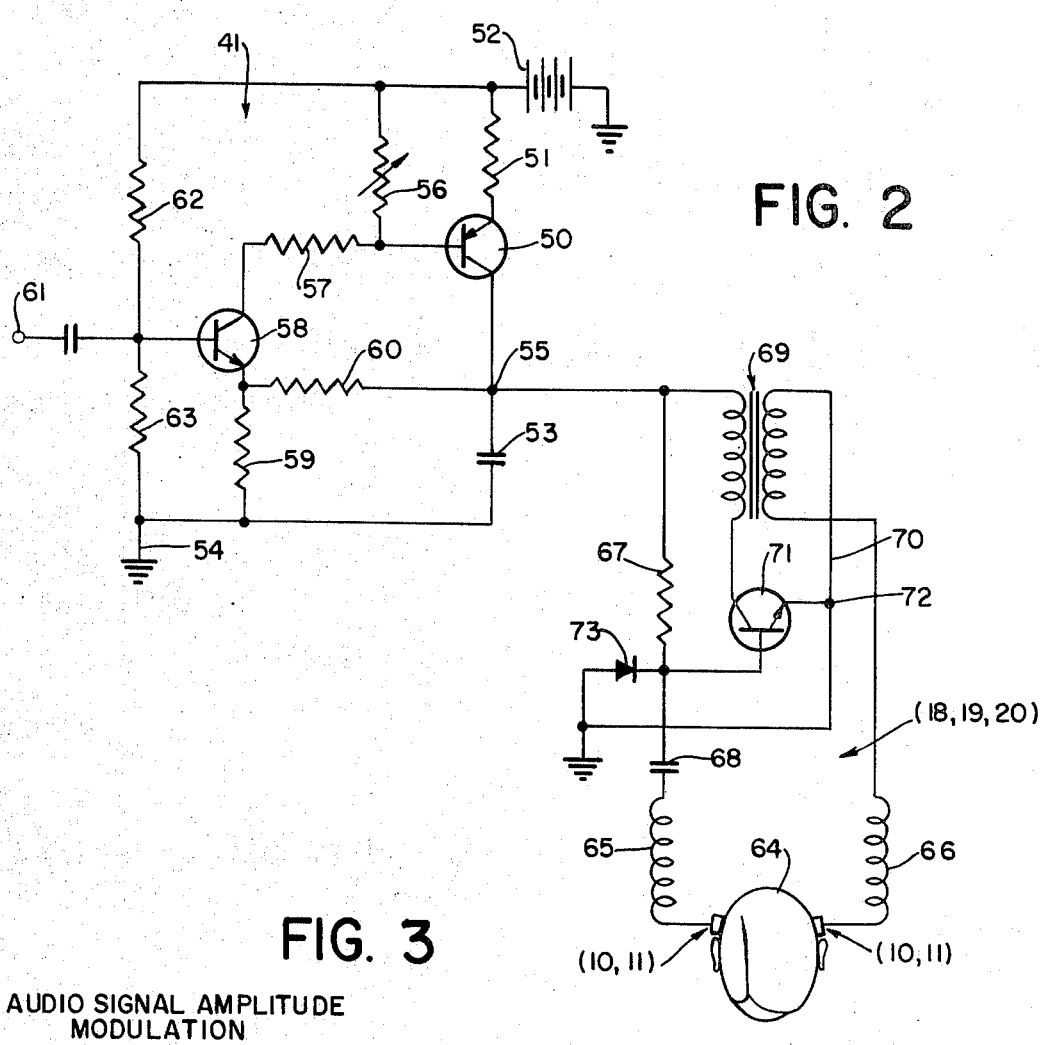

FIG. 2

FIG. 3

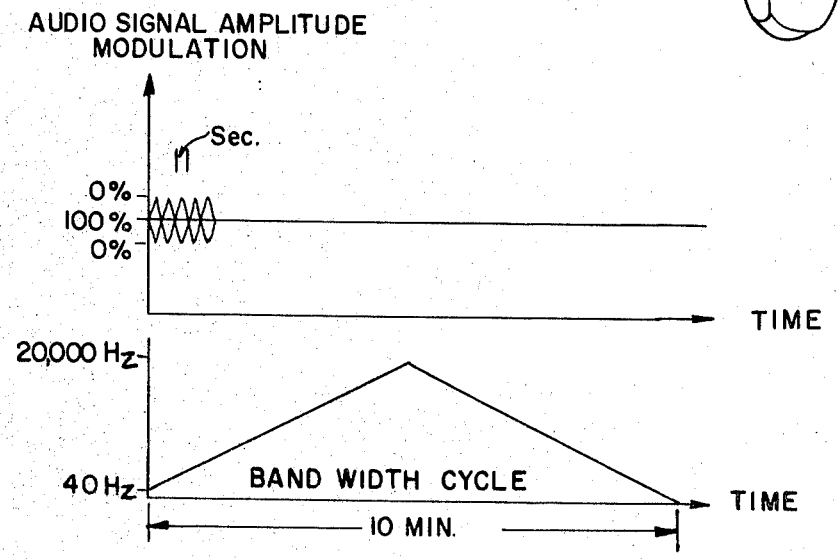

INVENTORS
HENRY K. PUHARICH
JOSEPH L. LAWRENCE

BY
Mandeville & Schweitzer
ATTORNEYS

METHOD AND APPARATUS FOR IMPROVING NEURAL PERFORMANCE IN HUMAN SUBJECTS BY ELECTROTHERAPY

RELATED PATENTS AND APPLICATIONS

The present invention is closely related to the subject matter of our prior U.S. Pat. Nos. 2,995,633, 3,156,787, 3,170,993, and 3,267,931, and to the subject matter of our copending U.S. application Ser. No. 446,267, filed Apr. 7, 1965, now abandoned. With respect to certain of the subject matter hereof, the present application is a continuation in part of said copending application Ser. No. 446,267.

Whereas our prior patents and our prior application are directed to unique methods and equipments for imparting sensations of sound to human subjects, through controlled electrical stimulation of the facial nerve system, the present invention is more specifically directed to techniques of therapy, utilizing many of the principles of our prior inventions, whereby to effect hearing rehabilitation in many hard-of-hearing patients, as well as achieving other desirable therapeutic advantages.

BACKGROUND OF INVENTION

For many years, the medical arts have made advantageous use of electrical energy stimulations, to achieve various desired effects upon the body of a human subject. A typical well-known example is the conventional diathermy treatment, by which heat is generated within the body tissues, through the controlled application of radio frequency energy. Electric shock treatments are used occasionally in psychiatric treatment. And, considerable work has been done in the art in connection with achieving various therapeutic effects through the use of electrically induced sleep. Efforts also have been made in the past to achieve therapeutic effects upon hearing loss patients through the application of extremely high frequency energy; however, such efforts have not been entirely successful due to certain shortcomings in equipment and procedural approach, which have been obviated by the present invention.

SUMMARY OF INVENTION

In accordance with one significant aspect of the invention, a basically new therapeutic procedure is provided, involving specifically controlled electrostimulation of the patient, possibly accompanied by audible stimulation, whereby, over a period of treatments, the subnormal hearing abilities of a variety of patients, suffering from a variety of hearing loss problems, can be significantly rehabilitated. One fundamental aspect of the invention involves the discovery that the patient should be electrically stimulated, in the region of the facial nerve system, using an alternating carrier signal of relatively low (compared with previous efforts) frequency, typically around 60 kHz. maximum. This carrier frequency signal is imparted to the subject in such a way as to constitute substantially the resonant frequency for the output circuit of the system, which includes the subject.

In the procedure of the invention, the resonant frequency carrier signal is applied to the subject in accordance with a predetermined, controlled schedule. This schedule includes amplitude modulation of the carrier signal at modulation frequencies corresponding to the audible range of hearing of a typical human subject, for example from about 20 Hz. to about 20,000 Hz. The subject thus is electrically stimulated by an amplitude modulated, resonant frequency carrier signal of such characteristics that it can produce sensations of sound within the subject, or at least within a subject having relatively normal faculties.

A particularly advantageous aspect of the invention resides in the provision of circuit arrangements, for application to the subject in the region of the facial nerve system, which enable substantially resonant circuit conditions to be maintained without extraordinary variations in the frequency of the carrier signal, so that uncontrolled changes in circuit parameters, resulting from such causes as physiological variations in the subject, can be accommodated.

Another advantageous aspect of the invention is the development of a clinical regimen, enabling specific application of the inventive treatment concepts to a wide variety of hearing loss patients. This enables standardized treatment programs to be given in most instances, although specialized treatment programs may be required in particularly difficult cases. The use of standardized treatment programs is particularly desirable in the present environment, in that it renders the entire treatment series susceptible of relatively automated control, as by means of a prepared tape program, for example.

As a secondary, but by no means insignificant, objective, the therapy program of the invention appears to have therapeutic benefits with respect to a wider range of conditions than hearing loss alone, and it is an objective of the invention to apply the treatment program to other areas of rehabilitation as appropriate.

For a better understanding of the invention, reference should be made to the following description of a preferred embodiment, and to the accompanying drawing.

DESCRIPTION OF THE DRAWING

FIG. 1 is a simplified schematic representation of a typical signal generating and controlling system, with appropriate data readout, which may be advantageously used in connection with a clinical program utilizing the procedures of the invention.

FIG. 2 is a simplified schematic representation of a circuit arrangement, advantageously incorporated with the system of FIG. 1, for applying controlled electrical signals to a human subject in accordance with the procedures of the invention.

FIG. 3 is a simplified graphic representation illustrating a program of power and frequency modulation of a carrier signal applied to a subject in a typical therapeutic procedure according to the invention.

DESCRIPTION OF THE INVENTION

In accordance with the procedural concepts of the invention, it has been found that significant hearing rehabilitation, as well as other desirable therapeutic effects, can be realized by applying a course of therapy which involves a properly controlled electrostimulation of the subject. In accordance with this invention, it is of significance that the subject be electrostimulated in the region of the facial nerve system, which is well-defined nerve network believed to be confined substantially to the head and neck areas of the human body. The character of the stimulation, too, is significant, and this, in accordance with the present invention, is in the form of an alternating carrier signal, of a frequency advantageously below, say, 100,00 Hz. The carrier signal is applied to the subject under conditions of circuit resonance for the carrier frequency, and this aspect of the procedure is believed to have considerable significance. In addition, the carrier is a double sideband signal amplitude modulated by an audio frequency signal, advantageously of frequencies within the audible range of a typical subject.

As explained in our prior patents and application, it is possible to create sensations of sound, within the brain of a typical human subject, by stimulating the facial nerve system of the subject with modulated electrical signals corresponding to the sounds sought to be generated. The teachings of our prior inventions thus afforded a particularly advantageous method and means for aiding or augmenting the subnormal hearing capabilities of a subject by providing a source of controlled electrical signals which, in effect, tended to bypass certain of the ear mechanisms of the patient.

The present invention represents a valuable extension of our previous inventions, in that it provides not only for the augmentation of the subject's hearing facilities, but, with many patients, can actually effect a rehabilitation of the subject's natural hearing system, occasionally to such an extent that the rehabilitated patient hears satisfactorily even without augmentation or assistance.

The treatment of the present invention, in its most advantageous specific form, involves the application of controlled electrical stimulation to the subject, by means of electrodes applied to the tragal areas of the ear and/or the stylomastoid areas of the neck. Typically, the electrodes are either of the insulated (dielectric) type or of the bare type, and they may be used in like or dissimilar pairs, applied to like or dissimilar areas of the subject, accompanied by appropriate circuit adjustments enabling resonance to be maintained in the output circuit, which includes the head of the subject, for the desired carrier frequency range.

Experience has shown that different subjects may respond differently to different types of stimuli, so it is difficult to generalize as to a single optimum form of stimulation. However, it appears that most subjects respond to one or more of the following stimulus modes:

Mode 1A: Two bare electrodes are applied bilaterally in the stylomastoid areas, with the output circuit being tuned to a carrier frequency in the range of about 2 to 10 kHz. An audio modulation band width of from about 20 to 2,000 Hz. is utilized.

Mode 1B: Two bare electrodes are applied bilaterally to the stylomastoid areas. The output circuit is tuned to accommodate a carrier frequency in the range of about 10 to 20 kHz., and the audio frequency bandwidth may extend from 2,000 to 8,000 Hz.

Mode 2: Two dielectric electrodes are applied bilaterally to the tagal areas. The output circuit is tuned to accommodate a carrier frequency in the range of about 40 to 60 kHz., and the contemplated audio bandwidth range is from about 20 to 18,000 Hz.

Mode 3A: One bare and one dielectric electrode are utilized, with the bare electrode being applied to the stylomastoid area and the dielectric electrode being applied on the opposite side to the tragal area. The output circuit is tuned for a carrier frequency in the range of about 20 to 40 kHz., and the audio bandwidth contemplated ranges from about 200 to 8,000 Hz.

Mode 3B: Electrode configuration is similar to Mode 3A. The output circuit is tuned for a carrier frequency in the range of about 20 to 40 kHz., and the audio bandwidth contemplated ranges from about 200 to 10,000 Hz.

Although a specific patient may respond more favorably to one stimulation mode than to another, it may be advantageous in some instances to provide a standardized sequence of treatments involving some exposure of the subject to all of the different modes.

Advantageously, although the electrical energy applied to the subject will vary somewhat according to the physiology of the subject, and, more significantly, the mode of stimulation, it is contemplated that the output voltage of the energizing system (as measured between a center tap of an output circuit transformer and ground) with two bare electrodes will range from around 1.4 volts to around 2.5 volts (RMS). With one bare and one dielectric electrode, the voltage may range from about 8 to about 18 volts. And, with a pair of dielectric electrodes, the voltage may range from about 20 to about 40 volts. The peak-to-peak reactive voltage across the head of the subject may be significantly higher than the above, depending upon the nature of the electrodes used. Thus, in a typical application of bare electrodes, the peak-to-peak reactive voltage may be around 12 volts. With one bare and one dielectric electrode, the reactive voltage typically might be in the range of 200 to 400 volts. With a pair of dielectric electrodes, the reactive voltage may have a much wider range, typically from about 1,200 to about 2,400 volts, for example.

Output current of the system (applied through the subject) may typically be in the range of 0.8 to 2.8 milliamps (RMS) for bare electrodes, 8 to 18 milliamps for one bare and one dielectric electrode, and 20 to 45 milliamps for dielectric electrodes.

It will be understood, of course, that the foregoing current and voltage values are intended not as a limitation on the scope of the invention, but rather as being illustrative of the general ranges of current and voltage values in which the practice of the invention has been found to be most effective.

In accordance with the invention, a therapeutic procedure suitable for a typical subject involves periodic stimulation treatments given to the subject, such as hour-long sittings, or perhaps even day-long sittings, with appropriate intervening rest periods. The subject has applied thereto a pair of electrodes, which may be either a like or dissimilar pair, depending upon the circumstances. Usually, dielectric electrodes are applied in the tragal area and bare electrodes are applied in the stylomastoid area. The applied electrodes are then energized by an appropriately modulated carrier signal, at the resonant frequency for the output circuit, as will be described in more detail hereinafter. Typically, the carrier frequency will fall between 2 kHz. and about 60 kHz., depending significantly upon the electrode combinations utilized.

In accordance with the invention, the treatment signal is a double sideband, amplitude modulated carrier signal, which is modulated by a controllable audio frequency signal. By body mechanisms not clearly understood, the subject is effectively able to demodulate the impressed treatment signal, and apparently to derive therefrom neural stimuli corresponding to those derived from a normal hearing system. In this respect, a perfectly normal subject will immediately be able to hear the sound of the audio frequency modulating signal, substantially as if he were wearing a pair of acoustical earphones. A patient requiring substantial rehabilitation, on the other hand, may not derive any sensation of sound from the impressed signal, at least in the initial stages of treatment.

Most advantageously, the audio frequency modulating signal is varied over a predetermined audio bandwidth in cycles of about 10 minutes. In other words, if the audio bandwidth ranges from, say about 2,000 to 10,000 Hz., the frequency of the modulating signal is varied, either progressively or in steps, from 2,000 to 10,000 Hz., and then back down to 2,000 Hz. in a period of about 10 minutes. In addition, the amplitude of the audio frequency signal advantageously is varied from 0 to 100 percent of maximum amplitude in cycles of about 1 second. The envelope of the audio frequency signal typically is triangular or sine wave (log to linear amplification), but in any event desirably cycles gradually in both directions, as distinguished from having a modulation envelope similar to a square wave or sawtooth wave, for example.

By way of example, the therapeutic procedure of the invention, as applied to a typical deaf patient having a profound bilateral sensorineural loss of hearing of about 20 years duration, might be as follows:

At the commencement of treatment, the typical patient might be anacoustic for pure tones in the frequency range from 125 to 8,000 Hz. at 100 db. pressure levels. At 125 db. pressure levels, the patient is incapable of discriminating a single word, although the sensation of noise could be experienced. A patient such as this is considered totally deaf for word discrimination.

The typical patient is given 1-hour treatments each day for a week, during which selected electrode combinations are applied across the head of the patient for predetermined periods. For each combination, the carrier signal is brought to peak resonance and is modulated with an audio frequency band ranging from a preselected minimum to a preselected maximum for the stimulation mode, in a cycling period of about 10 minutes. The audio frequency signal is amplitude modulated between 0 and 100 percent with a triangular envelope about once per second, the maximum amplitude of the audio signal approximating or being slightly less than the amplitude of the carrier signal.

After one week's treatments, the typical patient is given electrical stimulation with pure tone. When the patient first reports hearing a given frequency, say, 1,300 Hz., the electrostimulation therapy program is commenced, using the initially heard frequency as a starting point and stimulating the patient upward and downward therefrom. As the treatment

continues, the patient will begin to hear tones continuously up and down from the initial frequency. By the end of the second week, a typical patient will be able to hear, through electrostimulation, pure tones within a bandwidth from about 200 Hz. to about 4,00 Hz., and also will be able to begin to distinguish frequency changes from volume changes. This process of tone stimulation and tone discrimination is continued for another week, and, at the end of the third week, a typical patient will be able to hear tones within the bandwidth of electrostimulation from about 100 to about 8,000 Hz.

At the commencement of the fourth week of treatment, the patient usually is ready to be stimulated with complex audio frequency waves, as distinguished from pure tones. The patient then may be stimulated, using a magnetic tape source, for example, containing rhythmic music and speech. As soon as the patient is able to distinguish closely between speech and music, a process of speech education is begun. This consists of live voice stimulation from a therapist (i.e., the carrier signal is modulated by the therapist's voice). Simultaneously, the therapist's voice is directed acoustically at the patient, at a pressure level of about 80 db. Under this program, the patient is given blocks of about 10 words to learn by combined and synchronous electrostimulation and live voice stimulation (electroacoustic stimulation). By the end of the fourth week, a typical patient is able to learn to distinguish about 25 words by means of this program of stimulation. The words are so chosen that they readily combine into short sentences. When the patient is able to discriminate such sentences, when given in randomized order, at an accuracy level of 90 percent or better, it is considered that the patient is recovering utilitarian hearing.

By the fifth or sixth week, the typical patient usually is able to give a 7 percent or better correct response to numbers chosen at random and given to the patient by electroacoustic stimulation. At this point in the program, the patient may be taught Spondaic words. At this time, it may be desirable to fit the patient with an acoustic hearing aid that is energized from the electrostimulation source, so that the acoustic signal and the electrostimulation signal are precisely in phase. After having learned to use the hearing aid properly, the typical patient can score from 30 to 90 percent on Spondaic word lists, with electroacoustic stimulation.

During the continuation of the therapeutic process, most patients will show objective improvements in pure tone acoustic audiology (determined without electrostimulation). Such improvements in acoustic hearing ability have been found to last for an indeterminate period of time, days in some cases and weeks in others. However, it also has been found that the improved condition may be maintained by periodic, short electrostimulation treatments. The frequency of maintenance treatments required for any patient is determined empirically.

For patients having extremely difficult hearing loss problems, the ability to effect rehabilitation, to enable the patient to hear even by electrostimulation, appears to be a function of time and the number of treatments. In addition, in the later stages of treatment, it has been found particularly advantageous to supplement the electrostimulation with an acoustic stimulation. There appears to be a definitely synergistic effect to the combination of these signals, at least in difficult patients.

Although the foregoing reflects a composite of typical patient responses, individual difficult cases may show optimum responses to slightly different sequences of treatment. In all cases, however, the subject is stimulated by a carrier frequency at or near the resonance frequency of the output circuit, including the subject, and the carrier signal is modulated by an audio frequency signal in the range of the audible frequencies of a typical subject. A summary of selected such individual cases is set forth below.

SUMMARY OF TYPICAL CLINICAL CASES

Case No. 1

The patient was a male, age 70, having clinical total deafness in the left ear of 30 years' duration, following an episode of Meniere's disease, and progressive presbyacusis in the right ear, etiology unknown. The speech reception threshold for the patient's right ear is 60 db., with a 36 percent Spondi word discrimination capability at 95 db.

The patient was given daily transdermal electrical stimulation therapy for a period of 14 days, according to the following schedule:

a. The patient was first given a 10 minute treatment using insulated electrodes applied to the tragal areas. A resonant frequency carrier signal was applied to the patient, amplitude modulated from 0 percent to 100 percent power in cycles of about 1 second. The carrier signal was (amplitude) audio modulated from 100 to 20,000 Hz. and back to 100 Hz. in an audio band cycle of about 10 minutes. The patient was then given a 5-minute rest period, during which he was tested for audio bandwidth response to controlled signals applied through the electrodes.

b. The patient then was given a 10 minute treatment, using one bare and one insulated electrode, with the bare electrode being placed upon the right stylomastoid area and the dielectric, or insulated, electrode being placed upon the left tragal area. The carrier signal power was modulated from 0 percent to 100 percent on a 1-second cycle, and an audio band cycle of about 10 minutes was provided, during which the audio modulation of the carrier signal was varied between about 50 and 10,000 Hz. and back to 50 Hz. Thereafter, a 5-minute testing period was provided to determine the patient's response to controlled signals applied through the electrodes.

c. The patient was then given a further 10-minute treatment, using bare electrodes applied at the stylomastoid areas, with a 1-second power modulation cycle and a 10-minute audio band cycle between 50 and 3,000 Hz. After this, the patient was given a further 5-minute testing period for determining response to controlled signals.

Tests conducted upon the patient indicated a significant extension of the patient's high frequency audio range response, as a function of the number of treatments, as determined by tests made with the dielectric electrodes. Tests conducted with the bare electrodes indicated minimal response, although favorable response was shown upon further therapy, particularly within the middle frequency range. (Paradoxically, the bare electrodes have been shown to be most efficient with respect to rehabilitation of word discrimination capability in the totally deaf.)

The patient's acoustic pure tone audiogram showed considerable improvement, after 14 days of treatment, and this is considered significant in cases of presbyacusis. At the same time, the patient's Spondi word discrimination score, when tested at 100 db., improved from 36 percent at the beginning to 74 percent on the 14th day.

The treatment was then continued as above specified for a total of 54 sessions, with the following indicated results:

Prior to the transdermal treatment the patient wore a large body hearing aid. This was the only means whereby the patient could hear speech in quiet areas. In a noisy environment this aid proved ineffective for speech discrimination hearing. After 14 days of transdermal treatment according to the invention, the patient was able to get effective use from a small (Radioear, in-ear-canal type) hearing aid. His discrimination had improved to the point where he could effectively hear speech with this aid in a noisy environment.

Prior to treatment (for several years) head noises were prominent and disturbing, and described by the patient as "-subway train sounds roaring through my head." By the 14th day of treatment, the head noises had subsided to a level

where they were not disturbing, although still present. During the period from the 22nd to the 27th treatments, the head noises recurred to their former loud and disturbing level. However, they subsided by the 30th treatment, and were scarcely noticeable to the patient thereafter while under treatment.

During the 5 years prior to the transdermal treatment, the patient was subject to attacks of vertigo at least once or twice a month. During the initial period of treatment (3 months) the patient was free of vertiginous attacks.

By the 22nd day of the treatment (the 18th Therapeutic Session) the left ear of the patient began to show significant improvement in the low frequency spectrum of the pure tone audiogram. By the 43rd transdermal treatment the left ear had so improved that the patient was able to hear words for the first time in thirty years. Therefore, he was fitted with Sonotone M72 binaural hearing aids. As he learned to use a binaural aid, he was able to repeat live voice sentences correctly 100 percent. When tested with the right ear aid alone he could repeat such sentences 90 percent. When tested with the left ear aid along (masking to right ear) he could repeat sentences with 80 percent accuracy. After the 54th transdermal treatment, with the use of the Sonotone binaural aids, the patient was able to resume full time participation in his business.

The patient's improved abilities were found to have remained substantially at the same levels when the patient was retested about 3 months later. However, after the patient had been off of therapy for 2 months, his attacks of vertigo reoccured. Therapy was resumed, and in 2 weeks the symptoms of vertigo disappeared, and have not returned.

The following is a summary of the hearing changes observed in the patient after 54 one-hour each treatments, given over a 3-month period.

TABLE 1

	Before	After
A. Acoustic audiometry:		
(1) Right Ear:		
Pure tone average raised from, db	72	58
Speech discrimination, Spondi words, increased from, percent.	36	82
Speech discrimination, PB words, increased from, percent.	16	64
(2) Left Ear:		
Pure tone average (unchanged), db	83	83
Speech discrimination, Spondi words, increased from, percent.	0	32
Speech discrimination, PB words, increased from, percent.	0	[1] 12
B. Patient response: [2]		
(1) Right Ear:		
Speech discrimination, Spondi words	Equal	100%
Speech discrimination, PB words	do	90%
(2) Left Ear:		
Speech discrimination, Spondi words	do	54%
Speech discrimination, PB words	do	40%
(3) Binaural Aids Plus Electrostimulation:		
Speech discrimination, Spondi words	do	100%
Speech discrimination, PB words	do	90%

[1] With continued TD treatment left ear PB speech discrimination is at 40% as of this date (April 3, 1967).
[2] After treatment, when stimulated by transdermal electrostimulation plus acoustic stimulation.

Case No. 2

The patient was a male, age 18½years, normal except for congenital hearing loss, probably due to Rh factor pathology.

The patient was given a total of 70 minutes of treatment at one visitation, which included the following:

With dielectric electrodes applied bilaterally over the tragal area, a carrier frequency signal of 49 kHz., with pure tone modulation from 100 to 12,000 Hz. This stimulation was continued for 15 minutes.

Thereafter, the patient was given a 17-minute treatment, using one dielectric electrode and one bare electrode, both applied bilaterally to the stylomastoid area. The resonant carrier frequency applied was 36 kHz. with pure tone modulation from 100 to 4,000 Hz.

Next, the patient was given a 17-minute treatment with dielectric electrodes applied bilaterally over the tragal areas, substantially as in the first described sequence.

The patient was then given short periods of stimulation with acoustical assistance with live voice in one instance and hearing aids in another.

A 10-minute stimulation sequence was then given, using bare electrodes applied to the stylomastoid areas, using a carrier frequency of about 3.1 kHz. and voice modulation. This was followed by a similar sequence, in which the patient was aided by a conventional hearing aid.

In audiomentry tests performed on the patient before and after a single 70-minute treatment, remarkable improvement was shown after the treatment, as indicated in the following table.

TABLE 2

Speech audiometry	Pre Treatment		Post Treatment	
	Right Ear	Left Ear	Right Ear	Left Ear
Threshold of detectability, db	35	45	30	35
Speech reception threshold, db	45	65	40	55
Threshold of discomfort, db	95	95	100	100
PB discrimination at 30 db, Re speech reception threshold, percent	54	46	96	88
PB discrimination at 40 db, Re speech reception threshold, percent	60	50	100	92
Bone conduction PB speech discrimination without masking at 65 pb audiometer output, percent	20	12	60	54

The patient showed the above-indicated enhanced auditory activity for a period of 2 days following the transdermal electrostimulation therapy. The patient was then begun on a course of therapy involving 1-hour treatments, twice a week, shortly reduced to one session per week. Maintenance therapy has now been empirically established as one treatment (1 hour) per month to maintain the enhanced abilities indicated in the above table.

Case No. 3

The patient is a male, age 38, with a history of hearing loss at age 5, following episodes of measles, mumps, and scarlet fever. There is present bilateral symmetrical severe sensorineural loss of hearing activity. The patient has shown marked improvement in word discrimination acuity after 20 treatments of 1 hour each, in accordance with the invention. A combination of acoustic stimulation plus transdermal electrostimulation allows the patient to carry on normal conversational speech and, for the first time in the patient's life, he is able to use an amplified telephone to carry on a conversation.

In the following table, Part A, acoustic audiometry test results for the patient are indicated, before and after treatment. Part B of the table sets forth the patient's enhanced acuity when the acoustical stimulus is enhanced by transdermal electrostimulation.

TABLE 3

	Before	After
Part A. Speech Audiometry: [1]		
(1) Right Ear (at 100 db):		
Speech discrimination, Spondi words, increased from, percent.	0	50
Speech discrimination, PB words, increased from, percent.	0	42
(2) Left Ear (at 100 db):		
Speech discrimination, Spondi words, increased from, percent.	0	52
Speech discrimination, PB words, increased from, percent.	0	38
(3) Binaural (at 100 db):		
Speech discrimination, Spondi words, increased from, percent.	0	60
Speech discrimination, PB words, increased from, percent.	0	52

TABLE 3—Continued

	Before	After
Part B. Speech Audiometry: [2]		
(1) Right Ear: [3]		
Speech discrimination. Spondi words	=	86
Speech discrimination, PB words	do	76
(2) Left Ear: [3]		
Speech discrimination, Spondi words	do	90
Speech discrimination, PB words	do	78
(3) Binaural aids at 100 db: [4]		
Speech discrimination, Spondi words	do	92
Speech discrimination, PB words	do	82

[1] Acoustic stimulation alone.
[2] Transdermal electrostimulation plus acoustic stimulation.
[3] Acoustic=100 db; electrostimulation with bare electrodes at 0.4 watt.
[4] Electrostimulation with bare electrodes at 0.4 watt.

Case No. 4

The patient was a female, age 27, having a history of progressive sensorineural loss of hearing acuity, probably of otosclerotic origin. After 12 1-hour treatments, the patient's speech audiometry showed a significant increase in PB word discrimination, although this was not accompanied by any significant increase in pure tone audiometry. After the 27th 1-hour treatment, a PB word discrimination test, with the patient being electrically and acoustically stimulated, indicated repeated scores of 100 percent, as against a pretreatment control level of 42 percent for the left ear and 58 percent for the right ear.

After 30 treatments, the patient, assisted by a conventional hearing aid, was able to carry on conversations effectively in high noise level environments (e.g., 90 to 100 db.).

In the following table, Part A sets forth the patient's speech audiometry prior to treatment; Part B sets forth the patient's speech audiometry subsequent to the 12th 1-hour treatment; and Part C indicates the patient's hearing acuity after the 12th treatment, when subjected to electroacoustic stimulation.

TABLE 4

Part A.—Pre-treatment speech audiometry	Right	Left
Threshold of detectability, db	25	30
Speech reception threshold, db	35	80
Threshold of discomfort, db	95	95
PB discrimination at 40 db above speech reception threshold, percent	44	32
Bone conduction PB speech discrimination without masking at 65 db above audiometer, percent	32	------
Part B.—Post treatment speech audiometry (after 12th treatment)		
Audiometer:		
Threshold of detectability, db	20	25
Speech reception threshold, db	35	60
Threshold of discomfort, db	100	100
PB discrimination at 30 db above speech reception threshold, percent	------	76
PB discrimination at 50 db above speech reception threshold, percent	70	------
Bone conduction PB speech discrimination without masking at 65 db above audiometer, percent	40	------
Part C.—Electroacoustic stimulation. Transdermal, electrodes, bilaterally at tragi		
PB discrimination at 1.4 W	(1)	(1)
Spondi discrimination at 1.4 W	(2)	(2)
Audiometer:		
Threshold of detectability (Electrostimulation, 0.4 W.), db	15	20
Speech reception threshold (Electrostimulation, 0.8 W.), db	20	70
Threshold of discomfort (Electrostimulation, 0.8 W.), db	100+	100+
PB discrimination at 30 db abovd speech reception threshold (Electrostimulation, 0.8 W.), percent	100	92
Bone conduction PB speech discrimination without masking at 60 db above audiometer (Electrostimulation, 0.8 W.), percent	80	70

[1] 96% speech discrimination Binaural.
[2] 100% speech discrimination binaural.

Case No. 5

The patient was a male, age 72, with total deafness in the left ear of 55 years' duration, etiology unknown. The right ear showed progressive presbyacusis over the past 16 years. The patient's hearing loss was complicated by senile symptoms, with agitated depression occasionally, and memory confusion. The patient was given one course of treatment, of 60 minutes each day for 24 sessions. One bare and one dielectric electrode were applied bilaterally over the stylomastoid area, using a 36 kHz. amplitude modulated sine wave carrier, with audio modulation from 60 to 12,000 Hz. After the treatment, the patient showed significant improvement in the right ear acoustic audiometry, and a small improvement in the left ear. The patient achieved significant improvement for the right ear with respect to acoustic source PB word discrimination, which was even further improved with electroacoustic stimulation. This is reflected in the following table:

TABLE 5

A.—Pre-treatment acoustic speech audiometry	Right	Left
Threshold of detectability, db	65	100 (Nil)
Speech reception threshold, db	100	------
Threshold of discomfort, db	100	------
PB discrimination at 0 db above speech reception threshold, percent	10	------
Bone conduction PB speech discrimination without masking at 65 db audiometer output, percent	6	------
B.—Post treatment acoustic speech audiometry		
(1) Audiometer:		
Threshold of detectability, db	55	100
Speech reception threshold, db	65	100
Threshold of discomfort, db	100+	100+
PB discrimination at 0 db above speech reception threshold, percent	50	10
PB discrimination at 10 db above speech reception threshold, percent	56	12
Bone conduction PB speech discrimination without masking at 65 db audiometer output, percent	20	------
(2) Monitored live voice at 90 db, PB discrimination, free field, percent	52	------
C.—Post treatment electroacoustic speech audiometry		
(1) Transdermal. Conditions as for treatment, PB discrimination, percent	60	------
(2) Transdermal, conditions as for treatment plus air conduction aid to right ear at 80 db with monitored live voice at 50 db at a distance of 3 ft. behind patient, PB discrimination, percent	86	16

A most noteworthy therapeutic effect on the patient, apart from hearing improvement, was the fact that most of his behavioral symptoms of senility cleared up after 6 weeks of the electrostimulation therapy. His short term memory improved, temporal disorientation cleared up, and irritability and emotional instability diminished markedly. Moreover, according to the patient, Tinnitus and head noises diminished markedly.

Case No. 6

The patient was female, age 48, whose hearing was normal until she was treated with Kanamycin therapy for a fulminating Peritonitis. Typical ototoxic sensorineural hearing loss followed the administration of Kanamycin. The patient was given 26 1-hour treatments, according to the invention. She showed steady improvement with continued therapy, and, at times, can use an unamplified telephone to hear voice conversation.

The following table indicates that the patient's acoustic audiogram improvement was positive, but small. However, the improvement in PB word discrimination was remarkable, in response to acoustic source alone, as well as with electrostimulation.

TABLE 6

(A) Pre-treatment acoustical speech audiometry	Right	Left
Threshold of detectability, db	95	100
Speech reception threshold, db	100	100
Threshold of discomfort, db	+100	+100
PB discrimination at 0 db above speech reception threshold, percent	6	0
PB discrimination at 10 db above speech reception threshold, percent	6	0
(B) Post treatment acoustical speech audiometry		
(1) Audiometer:		
Threshold of detectability, db	80	100
Speech reception threshold, db	90	100
Threshold of discomfort, db	+100	+100
PB discrimination at 0 db above speech reception threshold, percent	70	52
PB discrimination at 10 db above speech reception threshold, percent	76	50
(2) Monitored Live Voice at 100 db, PB discrimination, free field, percent	[1] 60	------
(C) Post treatment electroacoustic speech audiometry		
(1) Transdermal stimulation (bare electrodes at 0.4 W.) plus monitored live voice at 60 db, PB discrimination, free field, percent	[1] 80	------

[1] Binaural.

Case No. 7

The patient was a male, age 83, with presbyacusis, whose onset was first noticed over 40 years ago. The patient could not get effective help with a conventional hearing aid and, therefore, did not use one. He retired from business because he was unable to discriminate in conferences and on the telephone.

The patient was given 36 1-hour treatments in accordance with the procedures of the invention. By the 16th treatment, the patient began to make effective use of the telephone, again. After 36 treatments, the patient's PB word discrimination improved from 40 percent before therapy to 84 percent after therapy. His hearing had improved to the extent that he could hear normal conversation, both in quiet and in noisy environments, without a hearing aid.

Case. No. 8

The patient was female, age 58 58, with profound bilateral sensorineural loss of 30 years' duration, believed to be of otosclerotic origin. The patient showed absolutely no pure tone response with the most powerful audiometer available. Before treatment, her speech discrimination was 0 percent, a case of total deafness.

The patient is undergoing a continuing series of treatments. After the 20th treatment, she indicated ability to hear an occasional word during conversation. By the 23rd treatment, she was able to identify 80 percent of selected words given at 100 db. The patient is now able to discriminate more than 10 percent of Spondi words, given at a level of 95 db. She continues to improve slowly in her word discrimination hearing acuity, with continued therapy in accordance with the invention.

Case No. 9

The patient was female, age 52, with a history of progressive hearing loss bilaterally over the past 20 years. Recently, she suddenly lost all hearing completely. Before commencing treatment, she showed absolutely no response to air conduction or bone conduction at peak audiometer output, and had no speech discrimination. She also indicated subjective disturbance from loudness and severity of head noises.

After 10 treatments in accordance with the invention, the a patient showed no response to pure tones from a transdermal electrostimulus source. By the 36th treatment, however, she was able to respond to the electrostimulation pure tone source in the frequency range from 27 to b **5,100** Hz. on each ear, using one dielectric and one bare electrode. It is noteworthy that the patient hears only with the electrodes in the stylomastoid position, and then only on the side of the bare metal electrode.

After the 49th treatment, the patient showed her first response to an acoustic source, and the patient is now able to correctly repeat 20 percent of numbers, given at random from 1 to 10, using a combination of electrostimulation and an acoustic source at 100 db.

This patient, who represents an extremely difficult case of total deafness, is showing slow improvement in pure tone thresholds and increases in audio band width response. Particularly notable, however, has been the almost complete subsidence of the subjective head noises, of which the patient complained prior to treatment.

Case No. 10

The patient was male, age 77, with bilateral symmetrical prebyacusis of about 8 year' duration. The patient wears a binaural "radioear" air conduction hearing aid.

After 19 treatments in accordance with the invention the patient shows significant improvement in pure tone threshold, in the low frequency end of the audio spectrum. In addition, the patient shows a slight improvement in PB word discrimination ability, in that the right ear has improved from 72 percent discrimination prior to treatment to 86 percent after, while the left ear has increased from 60 percent to 80 percent. The ultimate prognosis in this case is comparable to that reflected by the patient of Case No. 7.

Case No. 11

The patient was male, age 56, having a profound unsymmetrical sensorineural hearing loss in the right ear, probably due to petrous pyramid fracture at age 15.

Up to the 20th treatment, the patient could hear only in the frequency range from 20 to 740 Hz. in the right ear, with electrostimulation. Between the 22nd and the 24th treatments, however, he was suddenly able to hear from 20 to 5,200 Hz. with excellent tone discrimination in the right ear, with electrostimulation. Concurrently, there was a small improvement in the PB word discrimination acuity of the right ear, from 16 to 26 percent. A slight improvement also was reflected in the left ear, although the initial hearing loss in the left ear was minor.

A summary of the foregoing case histories, reflecting principally PB word discrimination acuity prior to treatment and after treatment, is set forth below.

SUMMARY OF CASE HISTORIES

Case No.	Age	Number of treatments	PB speech discrimination before treatment		PB Discrimination Post Treatment				
					Acoustic		Electrostimulation and acoustic		
			Right, percent	Left, percent	Right, percent	Left, percent	Right, percent	Left, percent	Binaural, percent
1	70	72	36	0	64	12	90	40	96
2	18	2	54	46	96	88	100	96	100
3	38	20	0	0	42	38	76	78	82
4	27	30	44	32	70	76	100	92	100
5	72	24	10	0	50	10	86	16	88
6	48	26	6	0	70	52	80	70	80
7	83	36	38	40	82	86	90	88	92
8	58	25	*0	*0	*30	*30	*40	*40	*40
Spondi					18	12	20	20	28
9	52	49	*0	*0	*20	*20	*20	*20	*20
Spondi					0	0	16	12	18
10	77	49	72	60	86	82	90	90	90
11	56	22	70	16	78	26	84	30	86

*Refers to blocks of 10 PB words which the patient learns, and the test was given by randomizing the work order. In all other cases, PB tests were given in blocks of 50 taped words from standard lists.

Referring now to the drawing, and initially to FIG. 1, a clinical apparatus suitable for a carrying out the process of the invention includes two pairs of electrodes **10, 11** arranged selectively to be applied to the subject and to be appropriately energized. One pair of the electrodes, No. 10 in the illustration, is insulated, while the other pair of electrodes is bare. Typically, the electrodes may have a cross-sectional area of 3 square centimeters, usually circular, and the insulated electrodes may be covered by one of more films of a dielectric material, such as Mylar, having a total thickness on the order of .25 mil.

The electrode pairs **10, 11** are electrode through ganged selector switches **12, 13** which, in a plurality of operative serve to connect the electrodes **10, 11** in circuit in various combinations to the output conductors **14, 15**. Thus, for purposes of illustration, the selector switches **12, 13** may be designated as being associated with the left side right side electrodes, respectively, and each switch has a series of four contacts, designated A through D. Since the switches are ganged to operate in unison, their contact positions will be the same.

When the selector switches **12, 13** are in the A position, the output conductors **14, 15** are connected to the bare electrodes **11**. In the B position, the output conductors are connected to the insulated electrodes. In the C position, the conductor **14** is connected to the left side insulated electrode **10**, and the output conductor **15** is connected to the right side bare electrode **11**. In the D position, the output conductor **14** is connected to the left side bare electrode **11**, and the conductor **15** is connected to the right side insulated electrode **10**. Thus, as will be understood, the A and B switch positions involve the use of like pairs of electrodes, while the C and D positions involve the use of dissimilar electrodes.

The output conductors **14, 15** are connected to stages **16** and **17** of the selector switch, which operate in unison with the stages **12, 13**. The switches **16** and **17** are appropriately connected to the output terminals of a bank of three tuned oscillator circuits **18—20**, to be described in more detail. Thus, the A contacts of the switches **16, 17** are connected to the output terminals **21, 22** of the oscillator **18**, the B contacts are connected to the output terminals **23, 24** of the oscillator **19**, and the C contacts are connected to terminals **25, 26** of the oscillator **20**. The C and D contacts of the switches **16, 17** are jumped, so that the D contacts likewise are connected to the oscillator **20**. Thus, in any set position of the selector switches **12, 13** and **16, 17**, a selected like or dissimilar pair of electrodes **10, 11** will be connected to the terminals of a predetermined one of the oscillator circuits **18—20**. The purpose of this, as will be made more evident, is to provide for an optimum resonant frequency in the output circuit for each type of electrode pair which may be in use.

For informational purposes, a voltage meter **27** is connected between the center taps of several transformers **28—30** incorporated in the individual oscillator circuits **18—20**, and one of the output conductors **14, 15**, to indicate the output voltage of the oscillator circuit in use at a given moment. Likewise, an amperage meter **31** is connected in series in one of the output lines **14, 15** to indicate the magnitude of current being applied to the subject.

For monitoring the operation of the oscillator circuits, there are connected between the center tap and one terminal of the oscillator transformers **28—30**, through a four-position selector switch stage **32**, a voltage meter **33**, oscilloscope **34**, and frequency meter **35**.

Various inputs to the system thus described typically include a tape deck-preamp combination **36**, a microphone-preamp combination **37**, and a pure tone generator **38** with modulation and sweep controls. An auxiliary input **39** also is provided for special input devices. All of the foregoing feed through an input selector switch **40** to an amplifier **41** which feeds the input to all of the oscillator sections **18—20**.

The apparatus may also include a monitor earphone section **42**, by means of which the therapist may monitor the inputs. A signal section **43** likewise is provided having pushbutton switches **44, 45** and indicator lights **46, 47**, by means of which the patient may signal responses to the therapist from time to time.

Referring now to FIG. 2, there is shown schematically a typical amplifier-oscillator circuit arrangement for advantageous incorporation in the system of the invention. In particular, the output circuit oscillator system is especially advantageous in that it provides for the generation of a carrier signal which is at all times in or substantially in resonance with the output circuit, which includes the subject. Moreover, the oscillator circuit is effectively able to maintain resonance conditions as the a parameters of the output circuit change with physiological changes in the body of the subject, variations in electrode contact pressures, etc.

The amplifier section **41** shown in FIG. 2 is a simple, two-stage amplifier, the output section of which includes a transistor **50**, suitably a **2N1184B**, the emitter side of which is connected through a 680-ohm resistor **51** to the positive terminal of an 18-volt power supply **52**. The collector element of the transistor is connected through a .01-microfarad condenser **53** to ground at **54**, and the signal output tap for the amplifier is also connected to the collector electrode at **55**. The base electrode of the transistor **50** is connected through a 1,000 ohm variable resistor **56** to the positive side of the power supply and through a 1,000-ohm resistor **57** to the collector element of a transistor **58**, suitably a **2N1481**. The emitter side of the input stage transistor **58** is connected through a 1,000-ohm resistor **59** to ground and through a 35,000-ohm resistor **60** to the collector of the output stage transistor **50**. The base element of the transistor **58** is connected to the input at **61**. It is also connected through a 100,000-ohm resistor **62** to the positive terminal of the power source and through a 3,300-ohm resistor **63** to ground.

The output signal of the amplifier stage **41** is applied to an oscillator circuit (**18, 19** or **20**) which includes a pair of electrodes **10** or **11** and the head of the subject **64**. In accordance with the present invention, the output circuit, including the subject, is specially designed to constitute an LC oscillator circuit having a resonant frequency in a desired frequency range, most advantageously below 100,000 Hz. Of particular significance, the oscillator circuit is designed to accommodate the fact that a significant circuit component is the capacitance of the coupling between the electrodes **10, 11** and the body of the subject. This can vary widely as a function of frequency, and of the interface conditions between the electrodes and the subject (e.g., assume that the subject begins to perspire), and is also known to vary with physiological changes in the subject having to do with his emotional condition. In this respect, experience has shown that capacitance across the head of a subject may vary as widely as from about 0.002 to about 1 microfarad.

Since the circuit coupling to the subject is essentially capacitive, and since the capacitance values of such coupling may vary significantly because of factors beyond the control of the therapist and which also may be transient in nature, the circuit has incorporated therein relatively large inductances, a such that the inductances are principally influential in determining the resonant frequency of the oscillator system. Pursuant to this arrangement, significant variations in the capacitance at the subject will have a relatively suppressed ef-

fect upon the resonant frequency of the circuit as a whole, such that the oscillator can readily accommodate these changes in circuit parameters.

The design parameters of the oscillator circuit are such as to oscillate at the desired carrier signal frequency. Accordingly, the output of the amplifier stage **41** may be a low frequency signal, which is combined in the oscillator stage with the higher frequency carrier. The thus modulated carrier is applied to the subject **64** in a manner which assures the resonance conditions which are desired.

For a circuit as thus far described, intended for use in a therapeutic program as described, the oscillator circuits **18**—**20** may be provided with added inductance, usually in the form of coils **65**, **66** on opposite sides of the subject, which typically have the following inductance values for the following circuit conditions: The oscillator **18**, connected for use in conjunction with a pair of bare metal electrodes, most advantageously has a pair of series inductances of 70 millihenries each, which experience indicates provides for a carrier frequency oscillation in the range of 2 to 10 kHz. (It may also be desirable to provide a still further oscillator, not specifically shown, having a pair of series inductance elements of 2 millihenries each, for use in connection with a pair of bare electrodes, to provide for a carrier frequency oscillation in the range of about 10 to 20 kHz.) The oscillator **19**, intended for use in connection with the insulated electrodes **10**, advantageously includes a pair of inductance elements of 30 millihenries each, which experience indicates typically results in a carrier frequency oscillation of 40 to 60 kHz. The oscillator **20**, intended for use with dissimilar pairs of electrodes, advantageously has a pair of inductance elements of 50 millihenries each, which experience indicates will provide a carrier frequency oscillation of from about 20 to 40 kHz.

In the overall oscillator circuit, the amplifier output is connected through a 180,000-ohm resistor **67**, a .01 microfarad condenser **68**, and one of the large inductances **65** to one side of the head of the subject. The other side of the subject's head is connected through the inductance coil **66**, one side of a transformer **69**, which suitably may be an NH1702GA, and thence through conductor **70** to ground. The other coil of the transformer **69** is connected to the collector element of a transistor **71**, which suitably may be a 2N3053. The emitter element of the transistor is connected to ground at **72**, and the base element is connected between the resistor **67** and capacitor **68** and through a diode **73** to ground.

When activated by signals from the amplifier stage **41**, the oscillator circuits will oscillate at a desired carrier frequency signal, as a function of the LC parameters (principally) thereof. Since the resonant circuit includes the subject itself, the carrier signal typically can be applied under peak resonance conditions, extraordinary changes in the circuit parameters being suppressed through the utilization of relatively large inductance elements, as described.

To accommodate the desired clinical procedure, at least the audio tone generator input **38** desirably is provided with facilities for varying the generator tone between the minimum and maximum desired limits (e.g., 20 to 20,000 Hz.) on a fairly long cyclical basis, such as an approximate 10 minute overall cycle, as reflected in FIG. **3**. While the generated tones are varying in accordance with the long period cycle, the amplitude of the generated audio frequency signal is also desirably modulated between 0 and 100 percent on a much shorter cycle, such as about 1 second, as reflected in the upper portion of FIG. **3**. This appears to have a desirable, stimulating effect upon the patient.

The system also desirably is provided with means for controlling the relative amplitude of the carrier signal and the modulating audio frequency signal. Typically, the modulating signal amplitude is slightly less (e.g., 80 to 90 percent) than the amplitude of the carrier signal, although occasionally it may be desirable that the modulating signal amplitude be as low as, say, 40 percent of the carrier signal, and occasionally it may be larger, say, 120 percent of the carrier signal.

The method and apparatus of the present invention have particular significance in that they are useful in the effective rehabilitation of hard-of-hearing patients. Thus, regardless of whether the subject ultimately is given hearing augmentation, in the form of a conventional acoustical hearing aid or in the form of electrically stimulated hearing in accordance with our prior inventions, or possibly both, the ability of the subjects to hear naturally or with augmentation often may be enhanced by a prior course of treatment in accordance with the invention.

In its basic form, the treatment of the invention involves a programmed course of electrostimulation of the subject, in the region of the facial nerve system, by means of an audio frequency signal, within the typical audible range of the human subject. Most effectively, this audio frequency signal is derived by appropriate modulation of a higher frequency carrier signal, which carrier signal is imparted to the subject under conditions of substantial circuit resonance, and ideally at relatively low carrier signal frequencies, typically on the order of less than 100,000 Hz.

It is possible that an electrostimulation program as contemplated by the present invention in effect tends to exercise and restore the initial capabilities of atrophied nerve networks of otherwise hard-of-hearing patients, such that their ability to hear through electrostimulation and otherwise is somewhat enhanced. However, it is not intended that the invention be limited to a particular theorization or explanation.

As will be understood, the specific treatment sequences recited herein and the specific apparatus utilized therefor, are intended to be illustrative only, as certain changes may be made therein within the clear teachings of the disclosure. Accordingly, reference should be made to the following appended claims in determining the full scope of the invention.

We claim:

1. Apparatus for treating human subjects for the purpose of effecting hearing ability rehabilitation, which comprises:

a. a plurality of electrodes including two insulated and two uninsulated electrodes, said electrodes being adapted to contact physically contralateral regions of the facial nerve region of a subject;

b. a plurality of open oscillator circuits, each of which is adapted to oscillate at a different frequency and to provide a carrier signal when completed;

c. selector switch means for connecting predetermined selected electrode pairs and predetermined open oscillator circuits, different pairs of said electrodes being adapted for use with different ones of said open oscillator circuits;

d. the oscillator circuits being adapted to be completed upon closure of said switch means and application of said electrodes to said subject and having circuit parameters so chosen as to provide predetermined LC series resonant frequency conditions in conjunction with the subject and with the selected electrodes applied to the subject; and

e. means for applying am an amplitude modulating signal with not more than 100 percent modulation to said oscillator circuits in a manner productive of a double side bank treatment signal of less than 100 kHz.

2. The apparatus of claim **1**, further characterized by said open oscillator circuits including inductance coils of large enough reactance in relation to the capacitance of the coupling between said electrodes and a subject and to the carrier frequency to maintain said LC series resonant conditions while accommodating limited changes in said capacitance due to physiological variations in the subject.

3. The apparatus of claim **1**, further characterized by:

a. said means for applying a modulating signal comprising a pure tone generator for tones in the range of approximately 20—20,000 Hz.; and

b. means being provided for varying the frequency of said tones from a minimum value of not less than approximately 20 Hz. to a maximum value of not more than approximately 20,000 Hz. and back to said minimum in a

sweep cycle of not significantly less than about ten minutes duration.

4. The apparatus of claim 3, further characterized by said pure tone generator including means for varying the amplitude of the tone signal over a substantial modulation range in cycles significantly shorter than those of said sweep cycle.

5. A method of treating human subjects for the purpose of a effecting hearing ability rehabilitation which comprises the steps of:

a. developing an alternating carrier signal of approximately 2—60 kHz. with a circuit which includes the head of the subject;

b. controllably amplitude modulating said carrier signal with an audio frequency signal to provide a double side band treatment signal of less than 100 kHz., limiting said amplitude modulation of said carrier signal to not more than 100 percent;

d. applying said treatment signal to the head of the subject in the region of the facial nerve system under conditions of substantial LC series circuit resonance; and

e. continuing the application of said treatment signal for a predetermined period of stimulation of not less than several minutes.

6. The method of claim 5, further characterized by said double side band treatment signal being modulated with cyclically increasing and decreasing signals varying between an upper limit of approximately 20,000 Hz. and a lower limit of approximately 20 Hz.

7. The method of claim 6, further characterized in that said treatment signal is modulated within a cyclical period of about 10 minutes.

8. The method of claim 7, further characterized in that said treatment signal is modulated between 0 percent and not more than 100 percent on a cyclical basis of substantially greater frequency than said cyclical period.

9. The method of claim 5, further characterized in that said electrical treatment signal is applied to the head of the subject through the tragal areas of the ear and/or the stylomastoid areas by the application of a physically contacting electrodes thereto.

10. A method of treating human subjects for the purpose of effecting hearing ability rehabilitation, in which the subject is given one of or more treatments, comprising:

a. applying electrodes to the subject in the region of the facial nerve system to establish an LC series resonant coupling with an oscillator circuit, said circuit including the head of the subject and being capable of generating a carrier signal of approximately 2—60 kHz.

b. amplitude modulating said carrier signal with an A-F signal to generate a treatment signal of less than 100 kHz., said treatment signal comprising said carrier signal not more than 100 percent modulated with said audio frequency signal; and

c. applying said treatment signal to the subject for discrete time intervals and varying the A-F component of said treatment signal within said intervals throughout predetermined and regularly controlled ranges.

11. A method of improving neural performance in human subjects, which comprises:

a. electrically stimulating the subject in the region of the facial nerve system by a controlled electrical treatment signal; and

b. said treatment signal including a carrier signal generated at a frequency substantially corresponding to the circuit resonance frequency of the circuit, including the subject, said carrier frequency being in the range of 2—60 kHz. and being amplitude modulated not more than 100 percent with an audio signal to provide a double sideband signal of not more than 100 kHz.

12. The method of claim 11, which is intended principally for the purpose of rehabilitating the hearing abilities, and which is further characterized by said audio frequency signal being controllably varied between upper and lower end regions of a spectrum of approximately 20—20,000 Hz.

13. The method of claim 12, further characterized by said electrical stimulation being applied in a series of discrete treatment periods of not less than several minutes each, each of said treatment periods being separated from the others by intervals greater in duration than the duration of said treatment periods.