US00D700246S

(12) United States Design Patent

Jacobs et al.

(10) Patent No.: US D700,246 S

(45) Date of Patent: ** Feb. 25, 2014

(54) **ELECTRONIC HOUSING**

(71) Applicant: **Microsoft Corporation**, Redmond, WA (US)

(72) Inventors: **Joel B. Jacobs**, Seattle, WA (US); **Scott Dallmeyer**, Seattle, WA (US); **Carl J. Ledbetter**, Mercer Island, WA (US); **Jonathan R. Harris**, Redmond, WA (US); **John Kenichiro Ikeda**, Seattle, WA (US)

(73) Assignee: **Microsoft Corporation**, Redmond, WA (US)

(**) Term: **14 Years**

(21) Appl. No.: **29/447,078**

(22) Filed: **Feb. 28, 2013**

(51) **LOC (10) Cl.** **21-01**

(52) **U.S. Cl.**
USPC **D21/332**; D14/496

(58) **Field of Classification Search**
USPC ..... D14/496, 401, 435, 474, 483, 217, 137, D14/138, 160, 168, 356, 203.1–203.8, 507; 345/156, 169, 173–179, 905; 715/727–729, 864; 710/1, 5, 8; 713/1, 713/600; 455/1.1, 1.7, 73, 344–347, 93, 95, 455/3.01–3.06, 550.1, 573.1; 370/342–344; 369/1, 2, 6–12; 463/43–47, 29–35; 273/148 B; D21/324–333
See application file for complete search history.

(56) **References Cited**

U.S. PATENT DOCUMENTS

5,914,707	A	*	6/1999	Kono	345/173
D435,272	S	*	12/2000	Swanson et al.	D21/328
D452,282	S		12/2001	Stewart et al.	
6,565,444	B2	*	5/2003	Nagata et al.	463/46
6,930,600	B1	*	8/2005	Hsieh	340/539.1
6,941,181	B1	*	9/2005	Mathurin	700/94
7,090,582	B2	*	8/2006	Danieli et al.	463/35
D557,680	S	*	12/2007	Corsini	D14/168
D568,276	S		5/2008	Ikeda et al.	
D576,686	S	*	9/2008	Ashida et al.	D21/332
D606,094	S	*	12/2009	Kimura	D14/496
D647,918	S		11/2011	Ledbetter et al.	
D657,788	S		4/2012	Ledbetter et al.	
D664,993	S	*	8/2012	Ledbetter et al.	D14/496
D665,424	S		8/2012	Ledbetter et al.	
D666,680	S	*	9/2012	Mercier et al.	D21/333
D680,174	S	*	4/2013	Mercier et al.	D21/333

OTHER PUBLICATIONS

Nintendo NES [online], [retrieved on May 14, 2013]. Retrieved from internet, <http://gamesdbase.com/system-nintendo_nes.aspx/>.
Way Back Machine [online], [retrieved Jan. 16, 2013]. Retrieved from internet, http://web.archive.org/web/20130116120917/http://www.klipsch.com/gallery-g17-air.

* cited by examiner

Primary Examiner — Prabhakar Deshmukh
(74) *Attorney, Agent, or Firm* — Banner & Witcoff, Ltd.

(57) **CLAIM**

The ornamental design for an electronic housing, as shown and described.

DESCRIPTION

FIG. **1** is a front-left perspective view of an electronic housing showing our new design;
FIG. **2** is a front-right perspective view thereof;
FIG. **3** is a front view thereof;
FIG. **4** is a rear view thereof;
FIG. **5** is a left side view thereof;
FIG. **6** is a right side view thereof;
FIG. **7** is a top view thereof; and,
FIG. **8** is a bottom view thereof.
The broken line showing of the remainder of the electronic housing and the unshaded regions therein in FIGS. **1-8** is for environmental purposes only and forms no part of the claimed design.

1 Claim, 6 Drawing Sheets

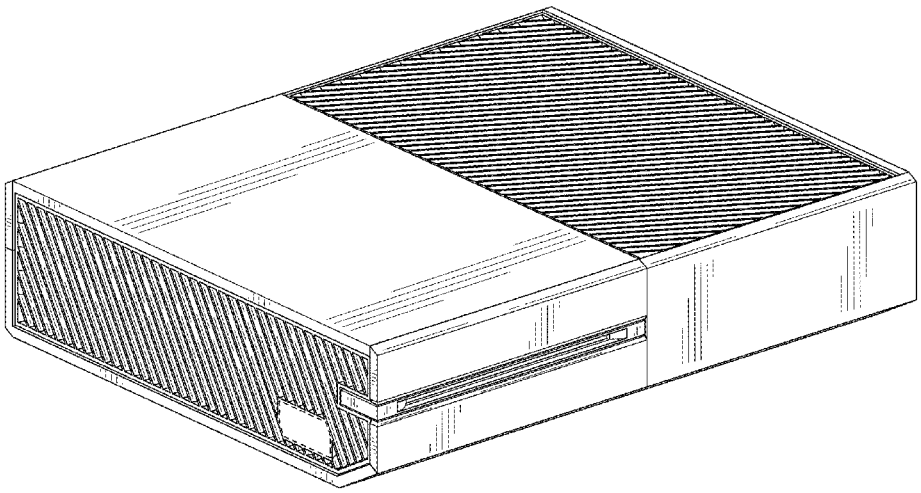

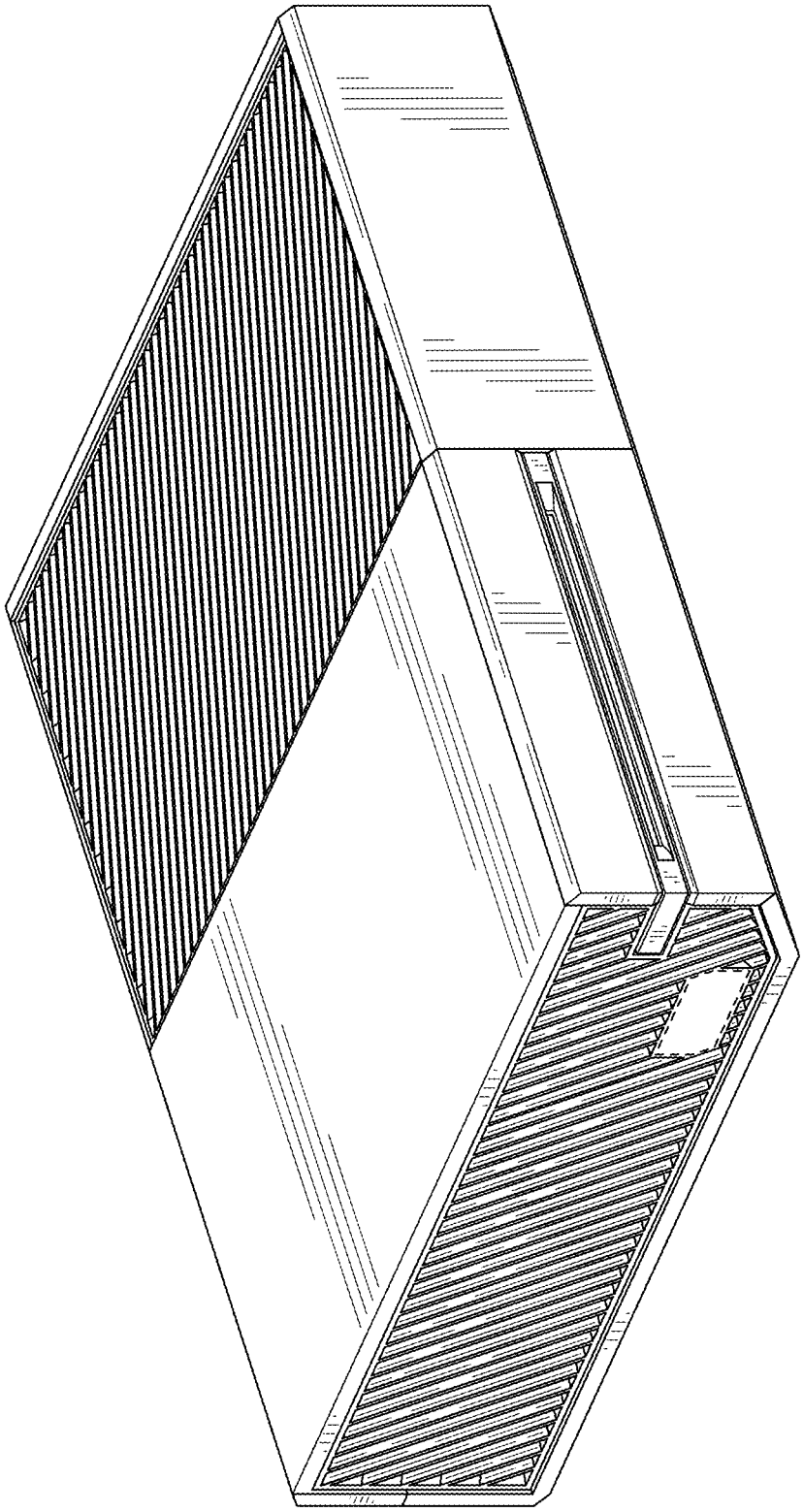

FIG. 1

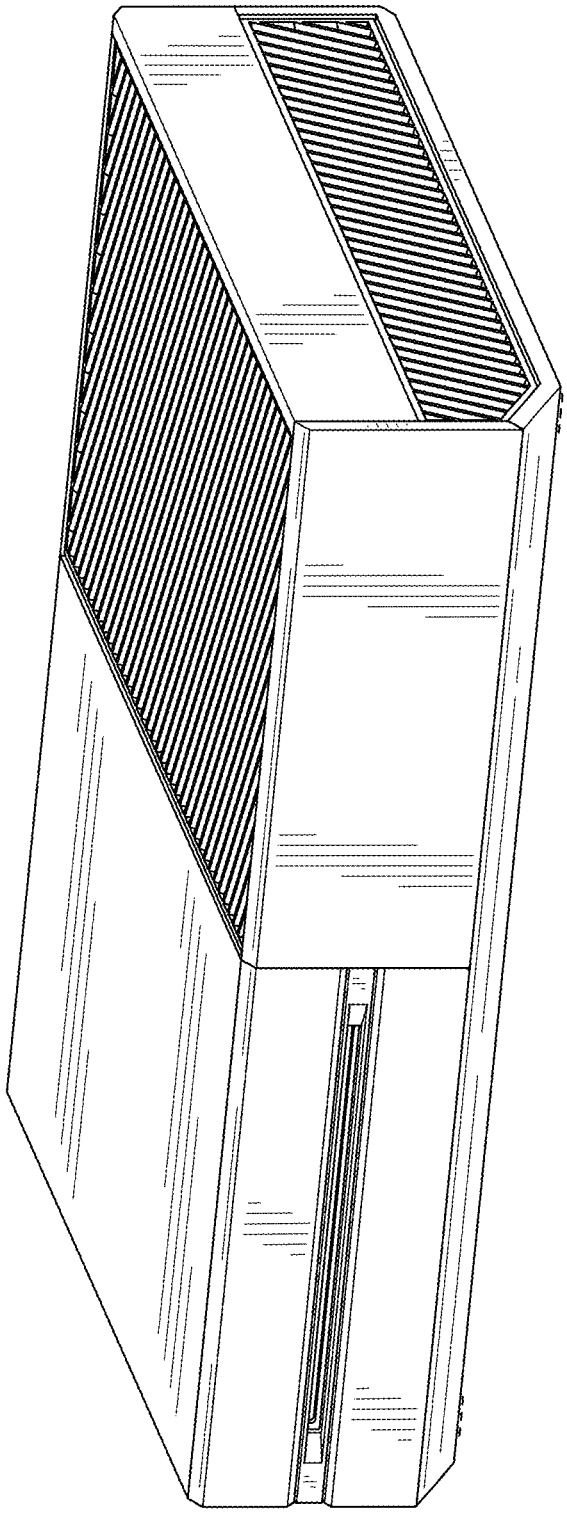

FIG. 2

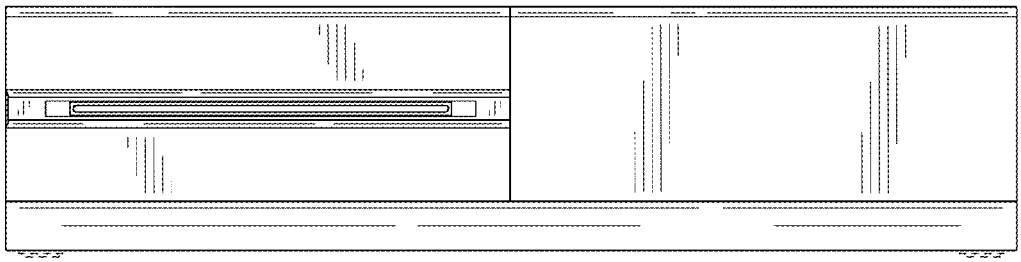

FIG. 3

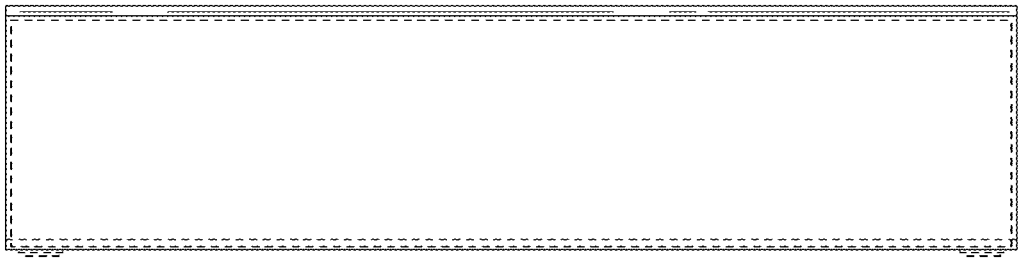

FIG. 4

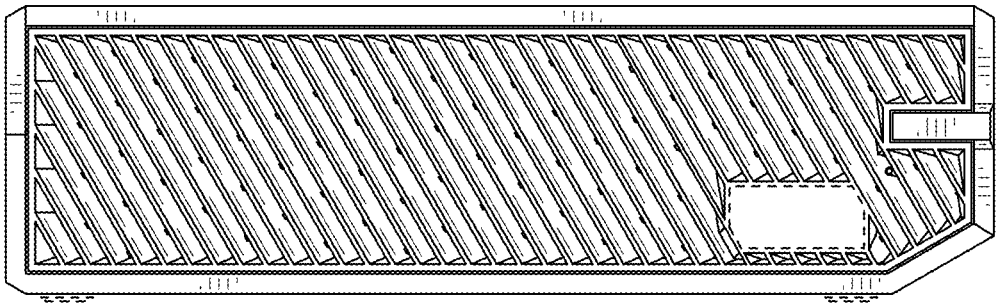

FIG. 5

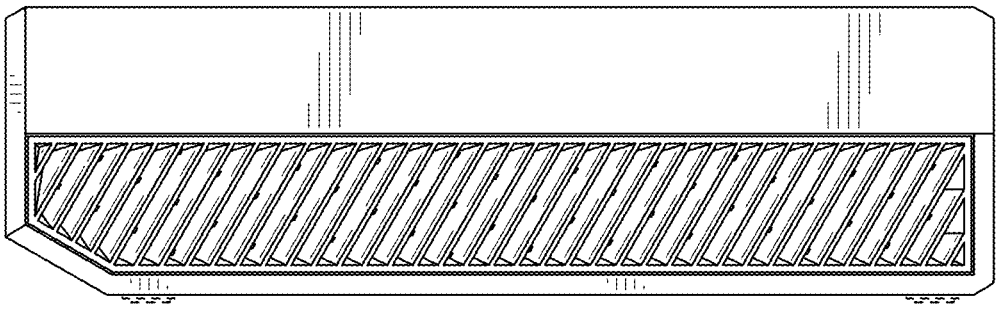

FIG. 6

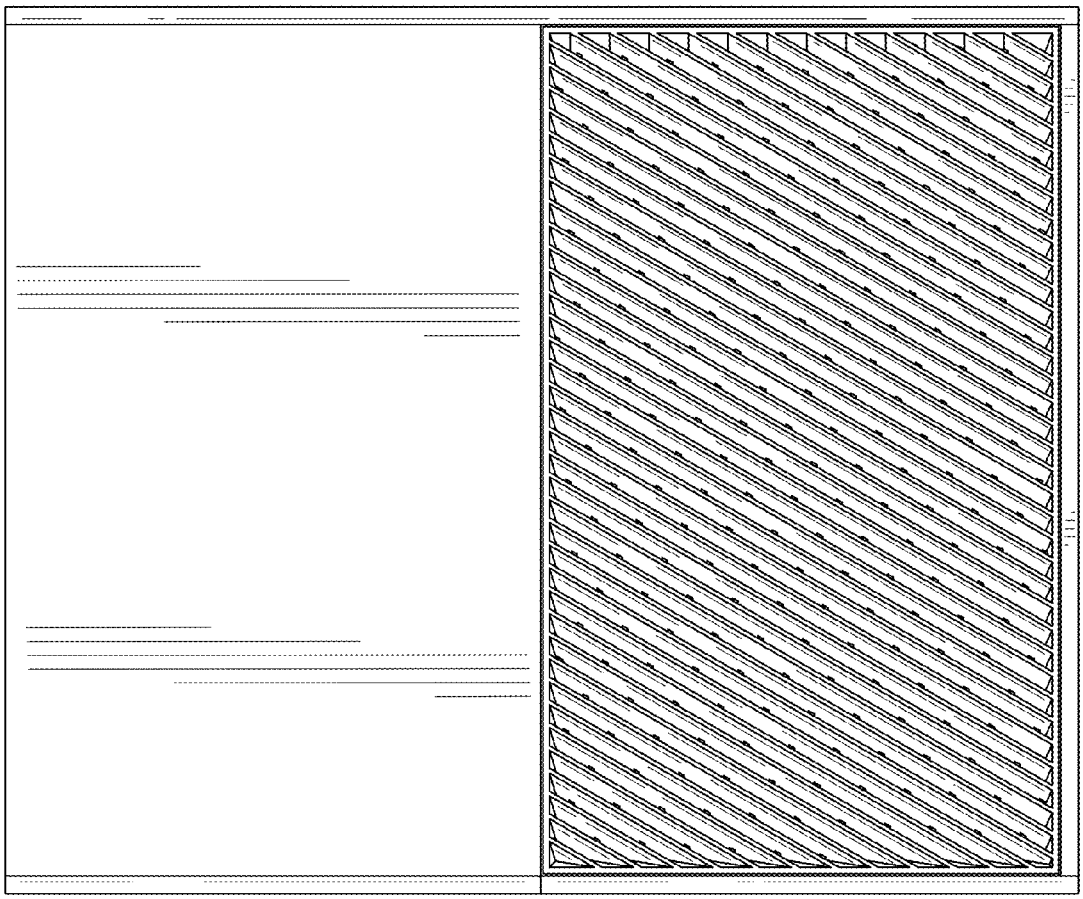

FIG. 7

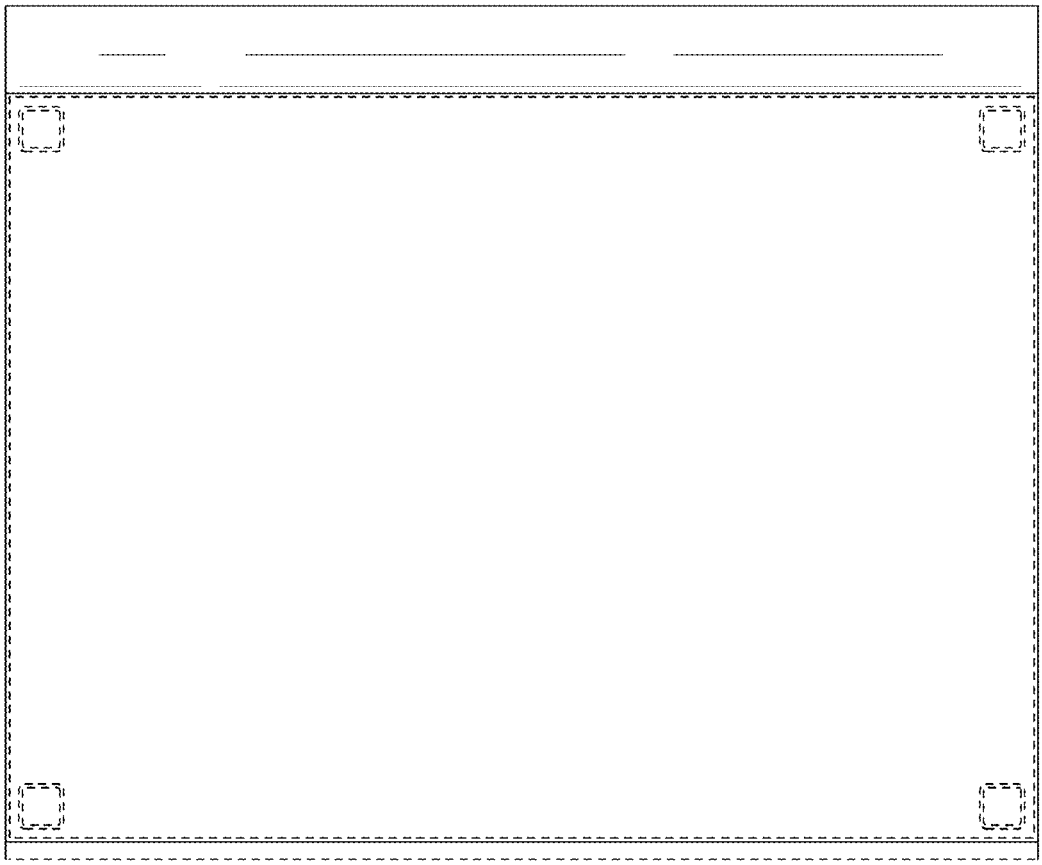

FIG. 8