Dec. 2, 1969 M. V. B. BROWN ET AL 3,482,037

HOME SECURITY SYSTEM UTILIZING TELEVISION SURVEILLANCE

Filed Aug. 1, 1966 3 Sheets-Sheet 1

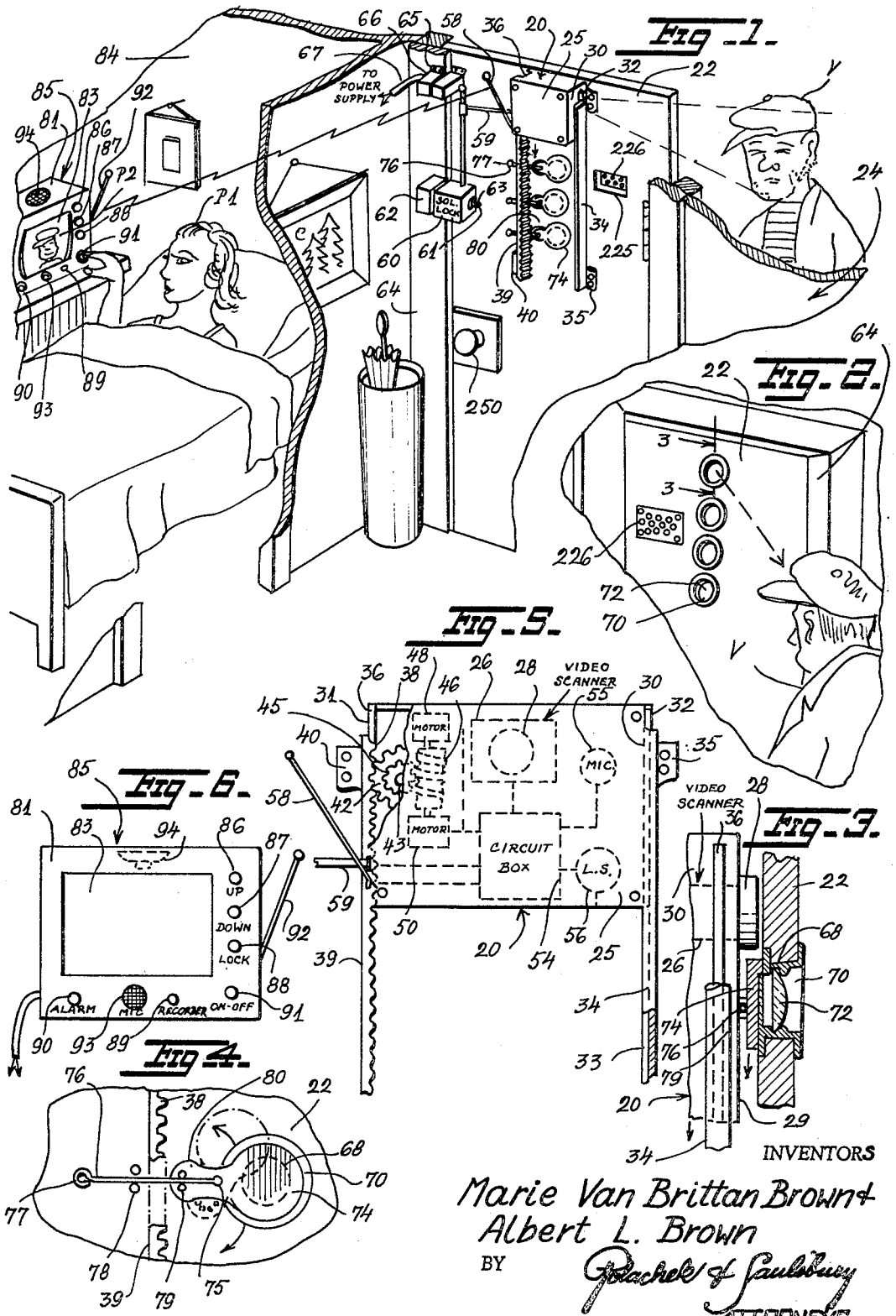


Fig. 1.

Fig. 2.

Fig. 3.

Fig. 4.

Fig. 5.

Fig. 6.

INVENTORS

Marie Van Brittan Brown &
Albert L. Brown

BY Pollachek & Lauliburg

ATTORNEYS

HOME SECURITY SYSTEM UTILIZING TELEVISION SURVEILLANCE

Filed Aug. 1, 1966 3 Sheets-Sheet 2

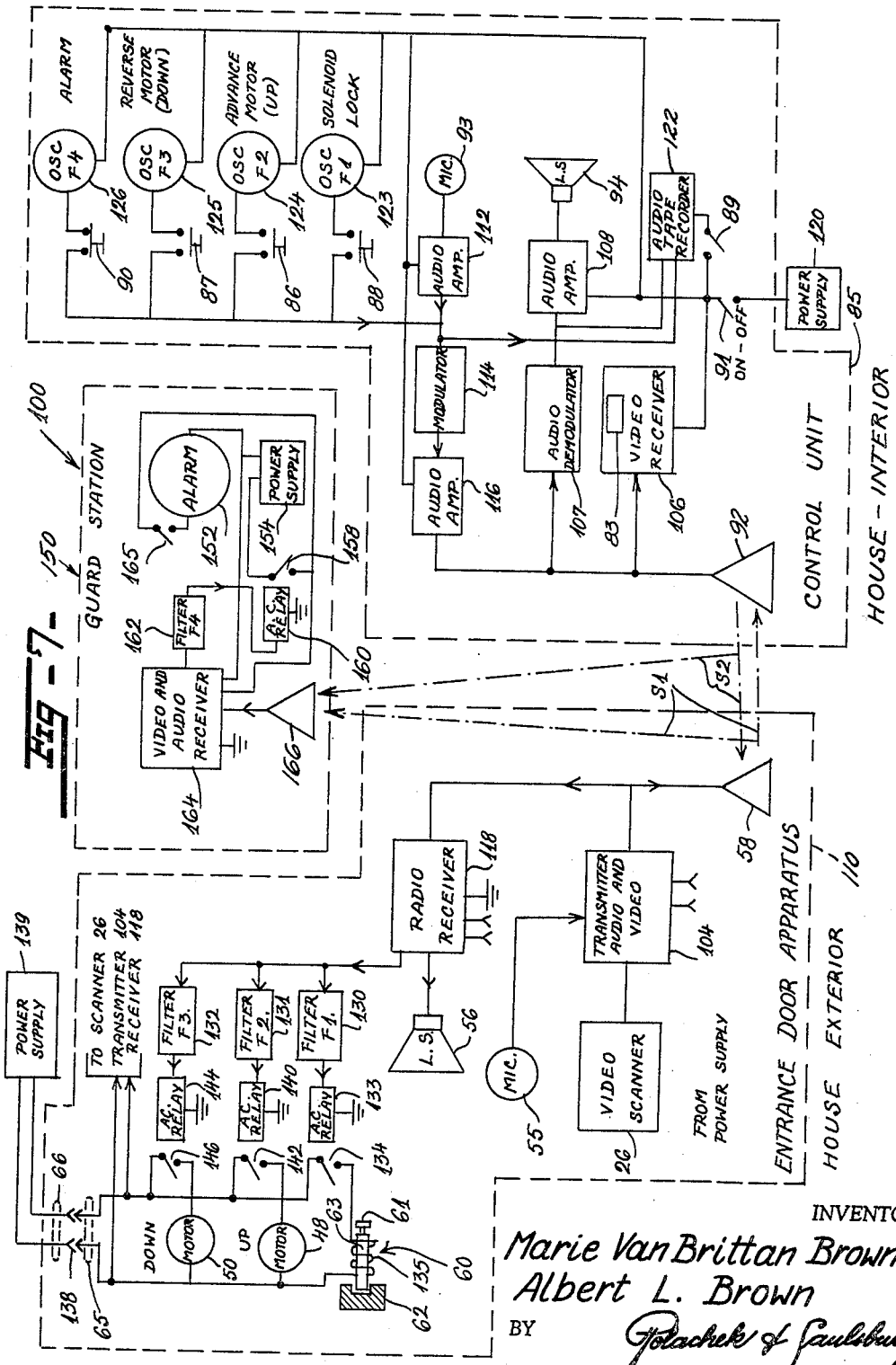


Fig. 7

INVENTORS
Marie Van Brittan Brown &
Albert L. Brown
BY Polachek & Saulsbury
ATTORNEYS

HOME SECURITY SYSTEM UTILIZING TELEVISION SURVEILLANCE

Filed Aug. 1, 1966 3 Sheets-Sheet 3

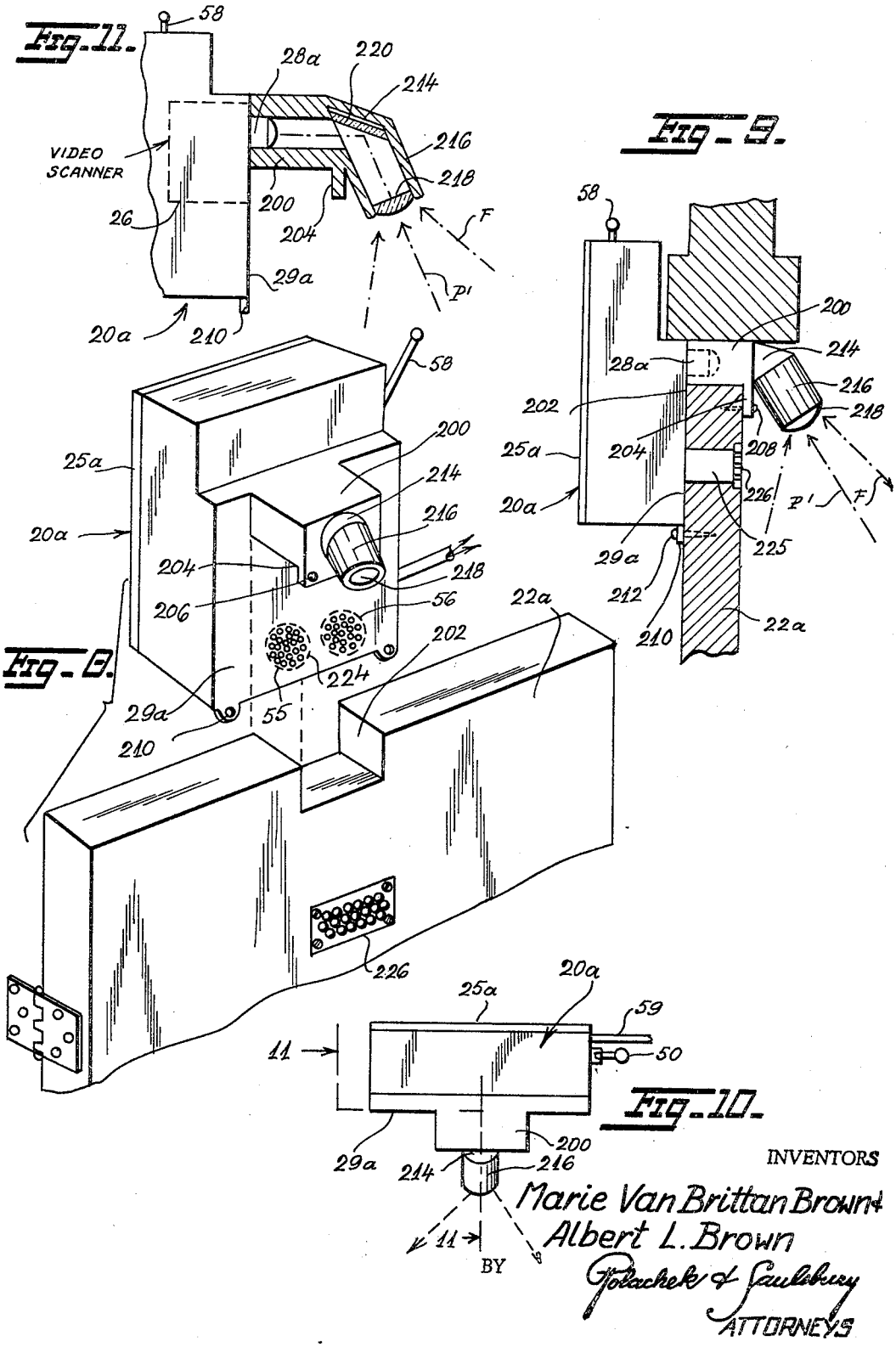


INVENTORS
Marie Van Brittan Brown
Albert L. Brown
BY
Potachek & Saulsbury
ATTORNEYS

United States Patent Office

3,482,037

Patented Dec. 2, 1969



3,482,037

# HOME SECURITY SYSTEM UTILIZING TELEVISION SURVEILLANCE

Marie Van Brittan Brown and Albert L. Brown, both of 151-58 135th Ave., Jamaica, N.Y. 11434

Filed Aug. 1, 1966, Ser. No. 569,319
Int. Cl. H04n 7/02
U.S. Cl. 178—6 1 Claim

## ABSTRACT OF THE DISCLOSURE

A video and audio security system for a house under control of an occupant thereof. The system includes a video scanning device at the entrance door of the house to scan a visitor outside the door, and includes audio intercommunication equipment inside and outside the door for conversing with the vistor outside the door. A lock is provided for the door with releasing means for the lock manually controlled by the occupant of the house.

This invention relates to a home security system, and more particularly concerns a system including apparatus mounted at an entrance door of a house, and other cooperating apparatus located remotely in a room of the house.

According to the invention a video scanning device is mounted on an entrance door of a house or apartment to scan a vistor standing at the door. A video picture is transmitted by wireless to a video receiver located in a bedroom or other room of the apartment or house so that an occupant of the house can see who is at the door. The apparatus includes audio intercommunication equipment so that the house occupant can converse with the visitor if desired. The door is equipped with a radio controlled lock which can be actuated by the house occupant to unbolt the dor if entry of the visitor is desired. Audio recording means are provided for recording the conversation with the visitor standing at the door. A radio controlled alarm may also be provided for alerting a guard, policeman or watchman at a security station. The alarm will be actuated by and under the control of the house occupant. The security station may be equipped with video and audio receiving equipment to monitor the video and audio signals passing betwen the apparatus at the entrance door and the house occupant. The monitoring of these signals will occur under control of the house occupant. The video scanning device at the door can be stationary with an optical arrangement for scanning the field of view at the entrance door. Alternatively, the scanning device can be movable under control of the house occupant for varying the scanned field of view.

It is therefore a principal object of the invention to provide a security system for a house, under control of an occupant thereof.

A further object is to provide an entrance door of a house with video equipment for scanning a visitor at the door, and with audio intercommunication equipment at the door so that an occupant of the house can converse with a visitor at the door.

A further object is to provide a security system for a house, the system having devices operable by an occupant of the house, such as devices including an alarm to alert a guard at a security station, video and audio receiving equipment for monitoring video and audio signals, audio recording apparatus, a solenoid controlled safety lock at the entrance door, motor means for moving a scanning device at the entrance door, etc.

For further comprehension and of the objects and advantages thereof, reference may be had to the following description and accompanying drawings and to the ap-



pended claim in which the various novel features of the invention are more particularly set forth.

In the accompanying drawings forming a material part of this disclosure:

FIGURE 1 is a perspective view with portions broken away of parts of a security system embodying the invention, shown installed at an entrance door of a house and in a bedroom of the house.

FIG. 2 is a fragmentary perspective view of the front of the entrance door illustrating the arrangement of the apparatus thereat.

FIG. 3 is an enlarged fragmentary sectional view taken on line 3—3 of FIG. 2.

FIG. 4 is a rear elevational view of part of the entrance door.

FIG. 5 is an enlarged rear view of part of the apparatus at the entrance door.

FIG. 6 is a front view of a video-audio receiver and control unit employed in the system.

FIG. 7 is a diagram of the security system.

FIG. 8 is a perspective view of a security scanning device and part of an entrance door upon which the device can be mounted.

FIG. 9 is a side view of the scanning device of FIG. 8, shown mounted on the entrance door part of which is shown in vertical section.

FIG. 10 is a top view of the scanning device of FIGS. 8, 9, and

FIG. 11 is a sectional view, partially in side elevational taken on line 11—11 of FIG. 10.

Referring now to FIGS. 1-6, the security system includes a rectangular cabinet **20** shown movably mounted on the rear of entrance door **22** of a house or apartment **24**. The cabinet has a removable rear cover **25** providing access to components inside the cabinet. In the cabinet is a video scanner **26** such as conventionally used in television systems. The scanner has a lens barrel **28** projecting out of the front side **29** of the cabinet and slightly spaced from the rear side of the door **22**; see FIG. 3.

On one side **30** of the cabinet is a vertical ridge **32** which fits slidably in a groove **33** formed in a vertical rail **34** secured by brackets **35** to the rear side of the door **22**. On the other side **31** of the cabinet is a slot **36** in which extends teeth **38** of a stationary rack gear **39** mounted vertically on the door by brackets **40**. A spur gear **42** mounted on a horizontal shaft **43** is meshed with the teeth **38** of the rack gear. On shaft **43** is a worm gear **45** meshed in axially vertical worm **46**, the worm is supported by axially aligned shafts of two motors **48**, **50** inside the cabinet; see FIG. 5. The motors are electrically connected to a circuit box **54** in the cabinet. Also connected to the circuit box is a microphone **55**, a loudspeaker **56** and the video scanner **26**, as indicated by dotted lines in FIG. 5. A television antenna **58** is mounted on side **31** of the cabinet and is connected to the circuit box. An electric cable **59**, connected to the circuit box, extends out of the cabinet and is connected to a solenoid operated bolt lock **60**. This lock has a bolt **63** engageable by an associated catch member **62** mounted on the jamb **64** of the door. Knob **61** on the bolt enables manual retraction and extension of the bolt. Cable **59** is also connected to an interlock switch plug **65** mounted on the door. This plug is engaged by an associated interlock switch receptacle **66** mounted on the door jamb **64**. Power supply cable **67** is connected to receptacle **66**.

By the arrangement described, electric power is brought to the motors **48**, **50** for driving the cabinet **20** up and down at the rear side of the door. In the door is a line of vertically spaced holes **68** in which are mounted rings **70**. Lenses **72** are fitted in the rings. Each lens is covered by a plate **74** eccentrically and pivotally supported

by a pin **75** on the door. At each plate **74** is a wire spring **76**. Each spring extends horizontally and has one end secured by a screw **77** to the door. Each spring extends horizontally between a pair of spaced pins **78**; see FIG. 4. The right free end of each spring extends between a pair of pins **79** mounted on a short lever **80** integral with plate **74** and extending to the left as shown in FIG. 4. By this arrangement, the plate **74** can be pivoted away from its normal position covering a hole **68** in the door. When the cabinet **20** is driven up or down, the scanner lens barrel **28** will engage each plate **74** in turn to displace it from the covered hole **68**. When the lens barrel passes the deflected plate, this plate will be returned by spring **76** to normal position covering a hole **68**.

At a guarded location such as a bedroom **84** remote from entrance door **22** is a control unit **85** of the system housed in part in cabinet **81**. Thus unit has a video receiving screen **83** best shown in FIGS. 1 and 6. On the cabinet **81** are controls **86, 87** which control up and down movements respectively of the cabinet **20** containing scanner **26** and other components of the system. A door lock control **88**, audio recorder control **89**, alarm control **90**, and ON-OFF switch control **91** are also provided on the unit where they can be conveniently operated by an occupant **P1** of the house or apartment **24**. An antenna **92** on the unit **85** is used for receiving video signals and for both receiving and transmitting modulated radio frequency signals. A microphone **93** and loudspeaker **94** are also provided on control unit **85**.

FIG. 7 shows system **100** digrammatically employing components already mentioned in connection with FIGS. 1–6. The entrance door apparatus **110** includes video scanner **26** connected to audio-video transmitter **104** which is connected to antenna **58**. Microphone **55** is also connected to an input of the transmitter. The combined audio-video signal **S1** is transmitted, from antenna **58** and is picked up by antenna **92** at the control unit **85**. Antenna **92** is connected to video receiver **106**, and a picture appears on screen **83** of the video receiver. Antenna **92** is also connected to an audio demodulator **107** which removes the audio signal from signals **S1** and applies it to audio amplifier **108** so that it is heard on loudspeaker **94**.

For audio intercommunication purposes, microphone **93** is connected to audio amplifier **112**. The amplified audio signal is modulated in modulator **114** and the modulated carrier drives audio amplifier **116**. A modulated radio frequency carrier signal **S2** is applied to antenna **92** and is radiated by this antenna. Signal **S2** is picked up by antenna **58** and applied to radio receiver **118** forming part of apparatus **110**. The received audio frequency signal is reproduced at loudspeaker **56**.

For control purposes there is provided ON-OFF switch **91** at unit **85** in circuit with power supply **120** and audio tape recorder **122**, video receiver **106**, audio amplifiers **108** and **112** and oscillators **123–126**. The oscillators all emit different signal frequencies **F1–F4**. In series with each oscillator is a pushbutton control switch **88, 86, 89, 90**, respectively, connected to modulator **114**. When one of these switches is closed at the control unit **85**, the associated oscillator connected to modulator **114** applies a signal thereto be modulated on the radio frequency carrier applied to amplifier **116**.

At the apparatus **110** are selective filters **130, 131** and **132** tuned to frequencies **F1, F2** and **F3** respectively. Filter **130** is connected to a relay **133** having normally open contacts **134**. Contacts **134** are connected in series with solenoid **135** which retracts bolt **63** of solenoid lock **60**. The bolt is manually set into engagement with catch member **62** of the lock. When solenoid **135** is energized the bolt **63** retracts to open the lock. Contacts **134** and solenoid **135** are connected in series with plug **65** which engages contacts **138** in receptacle **66** terminating at power supply **139**.

Filter **131** is connected to relay **140** which has normally open contacts **142** connected in series with motor **48** and plug **65**. Filter **132** is connected to relay **144** which has normally open contacts **146** connected in series with motor **50** and plug **65**. The plug **65** and receptacle **66** constitute an interlock switch which cuts off the power supply from components in apparatus **110** when the door **22** is open.



The system **100** also includes apparatus **150** at a guard station. This apparatus has an audible or visual alarm **152** connected in series with power supply **154** via a manually operable switch **165** and normally open contact **158** of a relay **160**. The relay is connected to filter **162** tuned to the same frequency **F4** as oscillator **126**. The filter is connected to the output of video and audio receiver **164**. Receiver **164** has an antenna **166** which receives both signals **S1** and **S2** radiated between antennas **58** and **92**.

In operation of the apparatus shown and described in FIGS. 1–7 relating to the security system, the switch **91** will be closed to alert the control unit **85** for action. The solenoid controlled lock **60** will be set by manually pushing bolt **63** into engagement with catch **62**. When the door **22** or **22*a*** is closed, the interlock switch **65, 66** will pass power to energize the scanner **26**, transmitter **104** and radio receiver **118**. The tape recorder and oscillators at unit **85** will be normally deenergized. They will preferably be transistorized so as to become activated instantly when any of the switches **86–90** is closed. The video receiver and audio and radio amplifiers are energized by the power supply when switch **91** is closed. Suppose now that a visistor **V** comes to the door **22** or **22*a***. The occupant **P1** of the house will see picture **P2** of the visitor on the screen **83** as shown in FIG. 1. By pushing either buttons **86** or **87** the drive motors **48** or **50** will be energized to drive the cabinet **20** up or down to obtain the best view of the visitor. If door **22*a*** is employed, the motors **48, 50** and controls **86, 87** will not be required. The occupant **P1** will interrogate the visistor **V** as to his business by speaking into microphone **93**. The occupant **P1** will hear the reply via loadspeaker **94**. The microphone **55** at the door is sensitive enough to pick up the visistor's reply at the door, passage **225** passes sound waves through door **22** or **22*a***. The visitor will hear the occupant's inquiry from loudspeaker **56** via passage **225**.

If the visitor is to be admitted, the occupant will press button **88** which will result in withdrawal of bolt **63** from catch member **62** to open the lock **60**. Then the visitor can turn door knob **250** to open the door.

Suppose the visitor **V** is a prowler or other undesired person, the occupant **P1** can press recorder button **89** to obtain an audio record on tape of the interrogation and reply of the visitor. If the occupant **P1** feels that a real danger exists of some unlawful act or entry, the occupant will press the alarm button. This will activate the alarm **152** at the guard station. At the same time the receiver **164** will display the picture of the visitor and the audio signals passing back and forth between the occupant and the visitor can be heard at receiver **164**. The guard or policeman at the guard station will thus be able to monitor the audio and video signals and can keep the entire situation under surveillance to take whatever protective action may be required.

It will be noted that the oscillators **123–126** generate the appropriate signals for operating the lock **60**, motors and alarm. Filters **130–132** pass the selected signals for operating the lock or motors. Filter **162** passes the signal **F4** to activate the alarm **152** and also to activate the receiver **164**. Thus the occupant **P1** is able to obtain police help if desired and to keep control of the situation at the entrance door at all times.

In FIGS. 8–11 is shown a cabinet **20*a*** which can be mounted on a door **22*a*** in a security system including most of the apparatus described in connection with FIG. 7. Corresponding parts having like functions are identically numbered. Cabinet **20*a*** has a removable rear cover **25*a***. On the front wall **29*a*** of the cabinet is a rectangular tubular arm **200** extending outwardly. This arm serves as a bracket to support the cabinet on door **22*a***. The door

has a rectangular notch **202** at its upper end to receive the arm **200**. The arm is formed with a depending flange **204** which abuts the front of the door. This flange has corner holes **206** to receive anchoring screws **208**. Depending eyes **210** are formed at the bottom end of the front of the cabinet to receive anchoring screws **212**. An optical tube **214** is formed on arm **200** at its forward end. This tube has a downwardly inclined barrel **216** in which is a lens **218**. In the optical path P′ of the lens is an angularly disposed mirror **220** inside the barrel which deflects the scanned line of sight into the barrel **28***a* of video scanner **26** inside of cabinet **20***a*. Antenna **58** and cable **59** extend laterally of the cabinet. Microphone **55** and loudspeaker **56** are mounted behind openings **224** in the front wall **29***a*. These openings communicate with a passage **225** in the door protected by a perforated plate **226**. Sound waves pass freely through this plate and passage **225** to and from the microphone and loudspeaker respectively.

The door **22***a* will be equipped with the power interlock switch and the solenoid controlled lock in the same manner as described in connection with FIGS. 1 and 7. The components of cabinet **20***a* will be connected in system **100** in the same manner as shown in FIG. 7. Motors **48**, **50**, relays **140**, **144** and filters **130**, **131** will be removed since cabinet **20***a* does not require them. Cabinet **20***a* is fixed in position. The optical field scanning lens **218** is so located that it encompasses the entire field F desired to be scanned in front of the door **22***a* by the video scanner **26**.

Operation of the system employing cabinet **20***a* is the same as already described in connection with FIG. 7, with the exception of the motor drive for the cabinet.

In a security system employing cabinet **20** or **20***a* the same measure of security is afforded to the occupant **P1** in the house or apartment **24**. Complete and effective interview and surveillance of a visitor is had under control of occupant **P1**, with supervision and monitoring of the interview at the guard station if the occupant **P1** deems it necessary.

While I have illustrated and described the preferred embodiments of my invention, it is to be understood that I do not limit myself to the precise construction herein disclosed and that various changes and modifications may



be made within the scope of the invention as defined in the appended claim.

What is claimed is:

**1**. A security system for protecting the interior of a place of residence having an entrance door, comprising a plurality of windows in the door disposed in vertically spaced array; protective plates covering the windows, respectively; means pivotally supporting said plates on the door to clear each of the windows; a cabinet containing a video scanning device; gear means movably supporting the cabinet to move in a vertical path at the door; motor means in the cabinet engaged with said gear means to drive the video scanning device in said vertical path past the windows while the cabinet pivots each protective plate in turn to clear its associated window for exposing said video scanning device at the cleared window; a video signal transmitter in said cabinet connected to said video scanning device to send a picture of a scanned field in front of each cleared window in turn to a remote location in the interior of said place of residence; radio receiver means in said cabinet; radio transmitter means at said remote location for sending radio signals to said radio receiver; power supply means connected to said motor means for energizing the same to drive the video scanning device up and down; and switch means connected in circuit with said power supply and said radio receiver means for turning on the motor means selectively in response to receipt of a signal from said radio transmitter means, whereby the field in front of each cleared window is scanned in turn.


**References Cited**

UNITED STATES PATENTS

| | | | |
|---|---|---|---|
| 2,146,512 | 2/1939 | Phinney | 178—5.6 |
| 2,914,746 | 11/1959 | James | 340—149 |
| 3,258,595 | 6/1966 | Galante | 250—199 |

OTHER REFERENCES

RCA, Closed Circuit Television Systems, Book I, pp. 182–186, 1958.


ROBERT L. GRIFFIN, Primary Examiner

R. L. RICHARDSON, Assistant Examiner