United States Patent [19]

Zink

[11] **3,766,331**

[45] **Oct. 16, 1973**

[54] **HEARING AID FOR PRODUCING SENSATIONS IN THE BRAIN**

[75] Inventor: **Henry R. Zink,** San Bernardino, Calif.

[73] Assignee: **ZCM Limited,** San Bernardino, Calif.

[22] Filed: **Nov. 24, 1971**

[21] Appl. No.: **201,831**

Related U.S. Application Data

[63] Continuation-in-part of Ser. No. 847,292, Aug. 4, 1969, abandoned.

[52] **U.S. Cl.** ..... **179/107 R**

[51] **Int. Cl.** **H04r 25/00**

[58] **Field of Search** ..... 128/2.1; 35/35 C; 179/107 R, 106 BC, 121 C, 15 A; 340/407

[56] **References Cited**

UNITED STATES PATENTS

3,629,521	12/1971	Puharich et al.	179/107 R
3,578,912	5/1971	Beavers, Jr.	169/15 A
3,170,993	2/1965	Puharich et al.	179/107 BC
3,497,637	2/1970	Puharich et al.	179/107 R
3,586,791	6/1971	Puharich et al.	179/107 R

FOREIGN PATENTS OR APPLICATIONS

278,833	10/1927	Great Britain	169/121 C

Primary Examiner—Kathleen H. Claffy
Assistant Examiner—Thomas L. Kundert
Attorney—Charles G. Lyon et al.

[57] **ABSTRACT**

A pulsed oscillator or transmitter supplies energy to a pair of insulated electrodes mounted on a person's neck. The transmitter produces pulses of intensity greater than a predetermined threshold value and of a width and rate so as to produce the sensation of hearing without use of the auditory canal thereby providing a hearing system enabling otherwise deaf people to hear.

19 Claims, 14 Drawing Figures

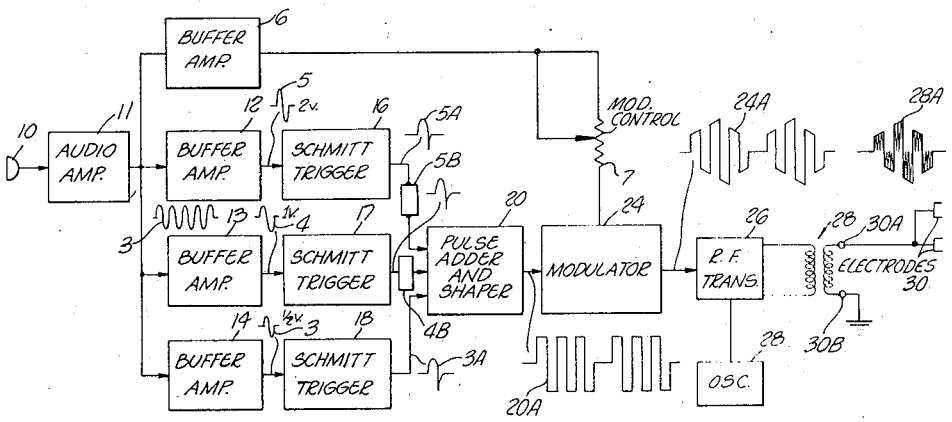

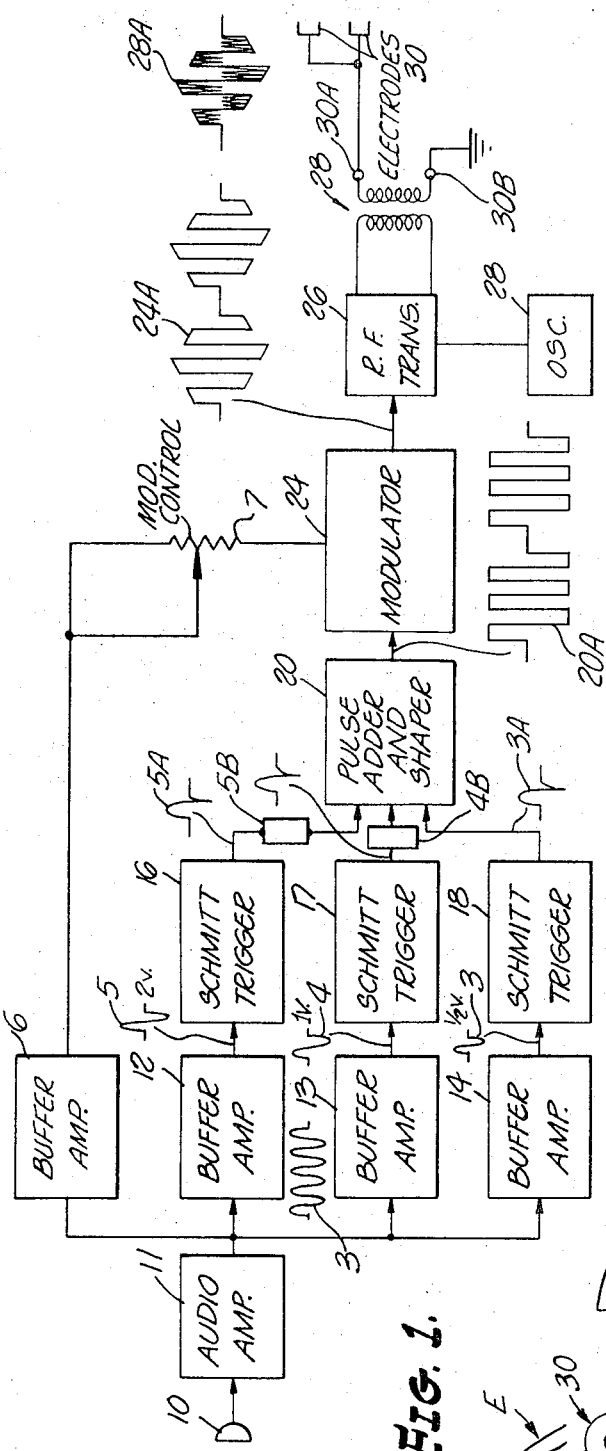

FIG. 1.

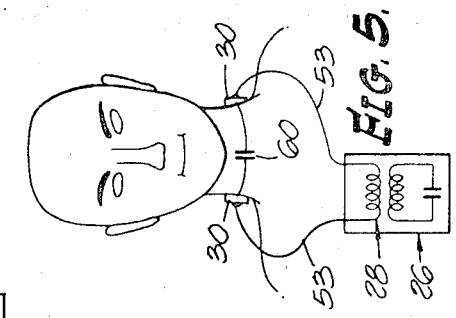

FIG. 5.

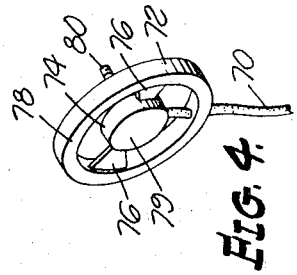

FIG. 4.

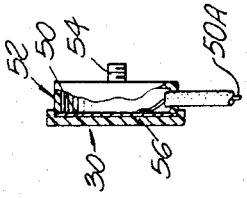

FIG. 3.

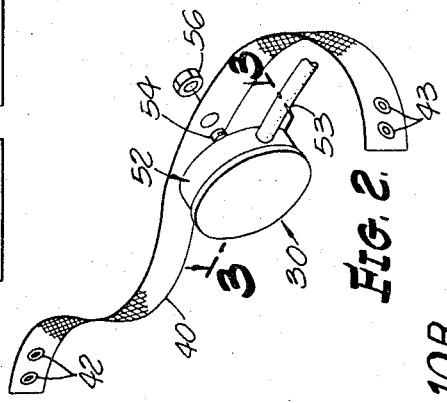

FIG. 2.

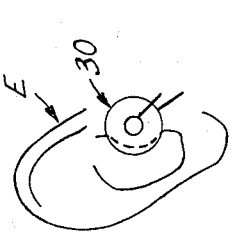

FIG. 10A.

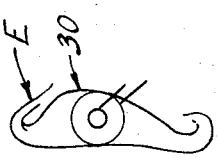

FIG. 10B.

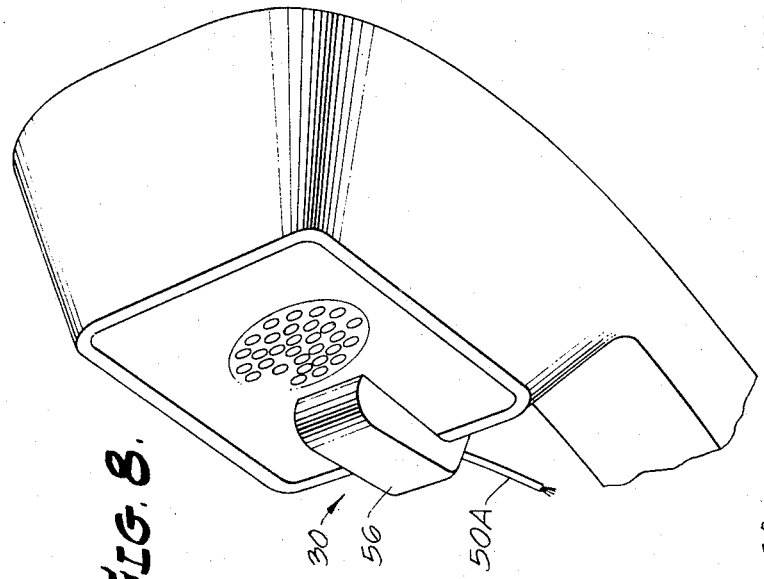

FIG. 8.

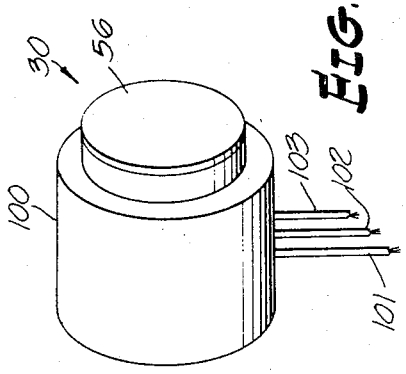

FIG. 7.

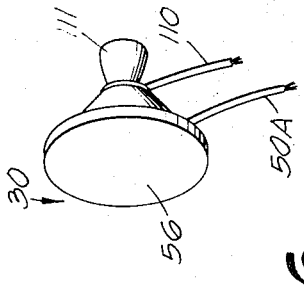

FIG. 6.

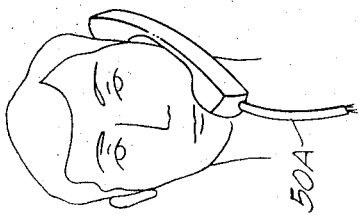

FIG. 9.

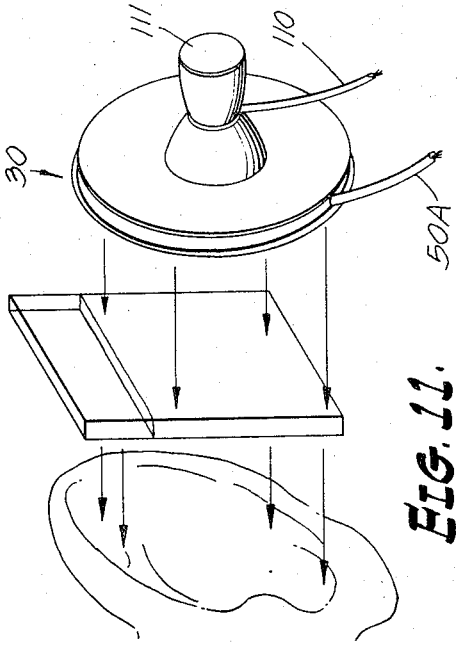

FIG. 11.

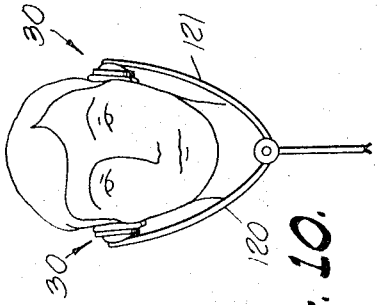

FIG. 10.

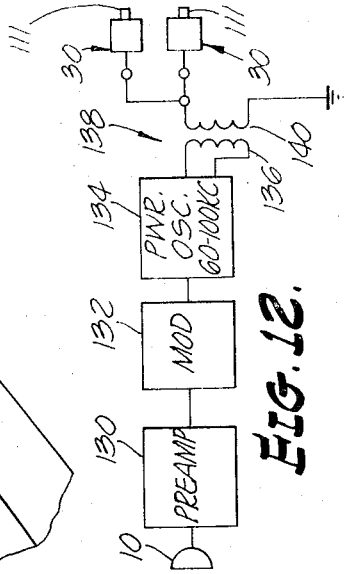

FIG. 12.

HEARING AID FOR PRODUCING SENSATIONS IN THE BRAIN

The present application is a continuation-in-part of my pending U.S. patent application, Ser. No. 847,292, filed Aug. 4, 1969 and now abandoned.

The present invention relates to means and techniques useful in conveying information and is particularly useful in hearing systems for otherwise deaf persons.

The present invention is described in specific relation to systems enabling deaf persons to have communicated to them information initially in sound or audible form with such information being transformed into unique pulses that key a transmitter which develops a carrier above the audio frequency range, such carrier thus modulated being applied via insulated electrodes to excite a deaf person's cochlea such that the person has the sensation of "hearing" that information initially in sound or audible form.

For these purposes, information in audible form is converted into a special form which is transmitted to appropriate areas of the brain. More specifically, such information is converted into essentially trigger pulses which are transmitted to the brain without the necessity of use of the person's auditory track, thereby in effect bypassing such auditory track. These trigger pulses are required to be of a predetermined threshold intensity below which intensity that part of the brain, considered the cochlea, is not excited.

It is considered that once a pulse exceeds a predetermined intensity, its pulse width and its rate of occurrence may be used to create the sensations of frequency or tone and loudness.

It is considered that the cochlea is the electronic generator of the auditory system and that with normal hearing all signals reaching the cochlea are mechanical sound signals, and that not until the cells attached to the tectorial membrane are caused to oscillate does the conversion from mechanical to electronic take place. As alluded to previously, the auditory nerve system including the auditory transmission platform are excited in a novel way such that it functions to produce the desired electrical output without the necessity for the presence of the person's auditory track.

It is therefore an object of the present invention to provide means and techniques incorporating these features.

A specific object of the present invention is to provide a system of this character which enables normally deaf persons to hear.

Another object of the present invention is to provide a system of this character which does not depend upon operation of the person's auditory track.

Another specific object of the present invention is to provide a system wherein information is conveyed to the cochlea in the form of coded pulses.

The features of the present invention which are believed to be novel are set forth with particularity in the appended claims. This invention itself, both as to its organization and manner of operation, together with further objects and advantages thereof, may be best understood by reference to the following description taken in connection with the accompanying drawings in which:

FIG. 1 illustrates a circuit diagram of apparatus embodying features of the present invention for practicing novel concepts and achieving new results also in accordance with features of the present invention.

FIGS. 2 and 3 illustrate one form of electrode arrangement used in the system shown in FIG. 1, FIG. 2 showing one of the two bands each mounting an electrode and FIG. 3 being a section as indicated by the line 3—3 in FIG. 2.

FIG. 4 is a perspective view of one of two electrodes useful when the system illustrated in FIG. 1 operates at microwave frequencies.

FIG. 5 illustrates the manner in which the electrodes of either FIGS. 2–3 or FIG. 4 may be mounted around the neck of the user and also illustrates schematically the equivalent capacitor and its association with the pulsed transmitter.

FIGS. 6, 7 and 8 illustrate modified insulated electrode systems embodying features of the present invention which may be used in conjunction with the circuit shown in FIG. 1 or in conjunction with the circuit shown in FIG. 12.

FIG. 9 illustrates the manner in which the electrode in FIG. 8 is used.

FIG. 10 illustrates the manner in which the electrodes may be maintained pressed with the person's ear folded and maintained folded by the forces exerted by the electrode holders.

FIG. 10A illustrates use of the device in connection with sealing of a person's ear E.

FIG. 10B illustrates use of the device in connection with folding of the person's ear E.

FIG. 11 illustrates a coupling system which may be used in conjunction with any one of the electrode systems described herein.

FIG. 12 is a block diagram of an amplitude modulation system also embodying features of the present invention.

In FIG. 1, the apparatus includes a conventional microphone 10 and audio amplifier 11 for producing electrical currents or voltage outputs representative of the sound energy impinging on microphone 10. Such outputs are further amplified in each of three buffer amplifier stages 12, 13 and 14 having their corresponding outputs applied to the input circuit of trigger or pulse generators 16, 17 and 18 respectively. These generators may each be of the Schmitt type. Wave forms are also illustrated in FIG. 1; and for purposes of simplicity in explanation, the output 3 of the audio amplifier 11 is a sine wave having a frequency of 1,000 cycles per second. The output of amplifiers 12, 13 and 14 are also sine waves which may have the same intensity. However, the Schmitt triggers 16, 17, 18 are adjusted to become operative to develop a trigger only after the sine wave exceeds a predetermined threshold value. Thus when the intensity exceeds, for example, ½ volt as represented by sine wave 3, the Schmitt trigger circuit 18 develops a pulse for each cycle of such wave 3. The corresponding output of Schmitt trigger circuit 18 appears at 3A. Likewise, when the intensity of the sine wave exceeds the illustrated one volt wave 4, Schmitt trigger circuit 17 is fired to develop trigger output pulse 4A. Similarly, when the intensity reaches or exceeds 2 volts as indicated by sine wave 5, an output pulse per each sine wave cycle above 2 volts appears as indicated by pulse 5A. The pulses 3A, 4A, 5A are typical Schmitt pulses with some flat top portion and a negative spike. Pulses 4A and 5A are subjected to delay networks 4B and 5B respectively such that the undelayed pulses 3A

and pulses 4A and 5A, delayed in different time amounts, appear at the intput of pulse adder and shaper **20** as a train of waves.

The output of each of the multiplicity of trigger generators **16, 17, 19** is thus applied to a common pulse adder and shaper stage **20** where such outputs are combined and appear as a train pf pulses **24A** prior to application to a modulator stage **24** which serves to key or modulate the output of the radio frequency transmitter stage **26** which incorporates an oscillator stage **28.** This train of pulses **24A** is preferably amplitude modulated to an extent greater than five percent prior to this application as a keying or modulating signal, and this is accomplished by applying the sine wave **3** to buffer amplitude **6** whose amplified output is applied through an amplitude modulation control in the form of an attenuating resistance network **7** to modulator **24** such that the keying signal then appears as an amplitude modulated keying signal **24A** at the output of modulator **24.** A keyed or pulsed radio frequency output appears across the primary winding of the coupling transformer **28** having one terminal of its secondary winding grounded and its other terminal connected to a pair of probes or electrodes **30, 30** which may be of the character described in FIGS. **2, 3** or FIG. **4** and applied to a person's neck as indicated in FIG. **5.** The signal applied to such electrodes is in the form shown in exaggerated form at **28A** which has generally the same envelope as the signal **24A** with, however, the high frequency components or carrier within such envelope.

In FIG. **2** one of the two neck straps is in the form of a flexible band or strap **40** having conventional metal strap fasteners **42, 43** on each end thereof for fastening cooperation with another like band (not shown). Each of such bands **40, 40** has secured to its central portion, an electrode or probe **30** constructed as shown in FIG. **3.** Each electrode **30** is in the form of a platinum foil **50** which forms a circular wall of a cylindrical housing **52** to which a lead **53** is connected. Such housing **52** has a bolt stud portion **54** extending therefrom for attachment to the strap **40,** using a nylon nut **56A** for that purpose. The front side of such housing **52** is covered with an insulating material **56** so that there is no metal contacting the person's skin. Instead of thin foil, more substantial solid metal electrodes may be used as, for example, a plating of precious metal over a solid base metal such as copper.

The use of insulating material **56** in these probes or electrodes results in an electrical capacity which is represented by the capacitor **60** in FIG. **5** which in effect is connected across the terminals of the secondary winding of coupling transformer **28.**

When operation is at microwave frequencies, the two probes or electrodes may be in the form shown in FIG. **4** wherein each of the two coaxial cables **70** has its outer sheath, normally grounded, connected to a ring portion and its inner conductor connected to an inner disc portion which is maintained in spaced condition from ring **72** and disc portion **74** are covered with insulating material **78, 79** respectively, so that there is no metal contacting the person's neck. This assembly may be secured to a flexible strap as in FIG. **2** using a mounting stud bolt portion **80** secured to disc portion **79.** In some cases the outer ring portion may be uninsulated and allowed to contact the person's skin.

It is presently believed that the auditory transmission platform is selective as to pulse width. After the triggering level is reached, it is believed that the width of the pulse determines the particular area of the platform stimulation. In general, a pulse of long duration stimulates low frequency areas; a pulse of shorter duration stimulates middle frequency areas, and a still shorter pulse is believed to stimulate high frequency areas.

There are further indications that the apparent loudness created by direct nerve cell stimulation as contemplated herein is related to the number of nerve cells that are stimulated, i.e., "fired" in a given area. The loudness sensation does not increase appreciably with pulse width (assuming that the pulse was sufficient to produce sensation) but does increase with the number of such pulses per unit time, i.e., the pulse repetition rate. Thus, for example, considering a 1,000 cycle sine wave a person will have the hearing sensation of a 1,000 cycle per second wave when two conditions are achieved; namely, (1) the pulse applied to his auditory nerve system is above a predetermined threshold level sufficient to "fire" nerve cells and (2) the pulse so applied has a characteristic width corresponding to 1,000 cycles per second. The loudness sensation is not increased by merely increasing the size of this triggering pulse. To increase loudness, the pulse repetition rate is changed. Thus, for example, a pulse meeting the two conditions above and appearing at a rate of 1,000 pulses per second produces a certain loudness sensation and this loudness sensation may be increased by increasing the pulse repetition rate so that instead of appearing, for example, once every 1/1000 second, it appears twice, three, four, etc. times every 1/1000 second depending upon the loudness of that 1,000 cycle per second sound applied to microphone **10.** This loudness feature may be instrumented in FIG. **1** by, for example, providing more than one trigger generator as illustrated and adjusting the level of such generators such that with increasing output signals at the three identical buffer stages **12, 13, 14** the trigger generators are progressively triggered or fired with the result that when a signal representing medium loudness is present, two such trigger generators are triggered and when the intensity of such output signal increases further the third trigger generator is triggered thereby supplying another identical pulse to the adder circuit. In this last case the transmitter is keyed on and off three times during the 1/1000 second time interval which corresponds to the period of a 1,000 cycle per second signal.

As to change in pulse width with frequency, this is accomplished through inherent operation of the exemplified trigger forming network since it is well recognized that the pulse duration of a pulse developed by applying a low frequency sine wave is greater than the pulse width of a pulse initiated by a higher frequency sine wave.

While apparatus built without a buffer amplifier **6** and a modulator control inherently produces some amplitude modulation of the pulse trains **24A** amounting to approximately five percent amplitude modulation, it has been found that improved overall system operation is accomplished when the percentage of modulation is increased and preferably the percentage of modulation is within the range of 20 to 50 percent.

It is observed that the amplitude modulating signal is the actual speech signal derived from amplifier **11** and that the actual pulse repetition rate of pulses which are derived from the adder and shaper **20** is higher than the speech frequency may by two to 10 times depending

upon the number of trigger stages **16, 17, 18** which are used. As many as 10 such trigger stages may be used with the output from each being separated in time by delay networks such that the pulses are added timewise as contrasted to amplitude wise. This relationship of two to 10 times mentioned above is substantially independent of the modulating sound frequency applied via control **7** since it is noted again that a pulse is derived from each trigger circuit once per cycle of the alternating wave applied to a particular trigger circiut.

In general the modulation control **7** is adjusted so that the signal from buffer amplifier **6** causes maximum sensation of sound over a 60 to 10,000 cycle per second frequency range. It has been observed that the high frequency response is improved using an amplitude modulating signal applied via control **7**.

The amplitude modulation imparted to the train of pulses is believed to cause desired ripple of the basilas membrane of the cochlear duct in that the shape of the train of pulses which is the result of amplitude modulation is believed to create what may be termed a positioning effect of sound in the cochlea. In accordance with this belief and theory, the amplitude modulated signals containing pulses are positioned over a specific area of the basilar membrane, and the pulses penetrate and cause nerve firing even in the absence of cochlear hairs or positive nerve action.

As alluded to previously, the carrier frequency may be a low frequency signal, for example, the range of 60 kilocycles to 100 kilocycles in which case the units designated as **26** and **28** may be representatives of a power oscillator stage which is keyed on and off and which as indicated by the waveform **28A** produces bursts of high frequency waves, the intensity of each succeeding wave thereof being slightly different and in accordance with the envelope established by the previously mentioned amplitude modulation.

Operation in such frequency range of 60 to 100 kilocycles may be accomplished using electrodes **52**. Operation may be accomplished at higher frequencies including microwave frequencies of, for example, 1,000 megacycles in which case electrodes of FIG. **4** are used. In either case, preferably the electrodes are connected to the same common output terminal such as terminal **30A** with the other output terminal **30B** being stabilized as, for example, by grounding of the same. This particular connection is considered important because it minimizes or eliminates tuning requirements. Indeed, when such electrodes are connected to a common output terminal, the associated high requency equipment need not be made adjustable, i.e., the high frequency equipment may be operated at a fixed frequency which is the same for different persons and different conditions. This is particularly true when the electrodes are insulated electrodes, i.e., have no metal energized part in contact with the skin of the person.

The electrode of FIG. **3** may be incorporated as part of a larger assembly as shown in FIG. **6** wherein a power oscillator circuit (represented by units **26** and **28** in FIG. **1**) is contained within an aluminum housing **100** and to which power is supplied lead **101**, the modulating signal via lead **102** and a ground connection via lead or terminal **103**. In this case, the lead **50A** (FIG. **3**) is internally connected to the oscillator circuit, and the metal plate **50** still remains insulated from the user by insulating material **56**.

In FIG. **7** the electrode of FIG. **3** is modified such that a ground lead **110** may be connected to a metal protrusion **111** and the person may then hold the insulated portion **56** against his skin or ear by applying pressure to ground terminal **111**. This arrangement is particularly useful in stereo systems.

In FIG. **8** the electrode system of FIG. **3** is modified for mechanical attachment to the receiver housing portion **115** of a conventional hand held telephone instrument so that in normal use of the same as illustrated in FIG. **9**, the nsulating cover sheet is pressed against the user's ear.

The electrode system of FIG. **3** may be hand held or mechanically secured to the person, as, for example, in FIG. **5**, or a pair of the same may be on opposite legs **120, 121** of a conventional holder for earphones that maintains itself as a result of a tension or clamping section against the person's ears. As illustrated in FIG. **10**. However, in this case using the electrode systems described herein, the ears are initially folded over prior to application of the tensioned holder **120,121**, and sufficient tension is developed to maintain the ears in such folded condition, and the electrode **30** in position. Instead of the ear channel being closed by the folded ear, the ear channel may be sealed by the electrodes contacting and pressing the cartilage portion at the front of the outer ear canal inwardly over the opening to such canal to thereby seal the canal. The folded ear coupling is illustrated in FIGS. **10A** and **10B**.

Likewise, the elctrode system of FIG. **6** may be hand held or holder held with or without the ear being folded over.

The electrode system of FIG. **7** may be hand held with the ear being folded over with the ear being sealed or with the ear being open.

FIG. **11** illustrates the use of a fluid filled plastic container **120** between an electrode exemplified by the electrode of FIG. **7** and the person's ear. In use, pressure is applied by the person's fingers engaging the metal grounded protrusion **111**, the pressure being sufficient that the plastic container conforms to the geometry or shape of the person's ear. Such plastic container is preferably in the form of a hollow plastic container which is initially molded to the person's ear using techniques heretofor used in molding ear pieces. In this instances, the mold is hollow and is filled with a fluid such as water and has mechanically secured thereto an electrode of the character of FIGS. **7** and **11**. The use of such fluid filled intervening body results in increased useful output, this being considered to be due in part to improved tissue contact with the pinna (outer ear). Such intervening body may be of plastic of 0.003 inch thickness, as illustrated, and partly filled with water such that slight pressure causes it to press into the crevices and folds of the ear with the water serving as a conductor and providing a more ideal surface.

In some cases the finger held protrusion **111** in FIG. **7** may instead of being metal may be of insulating material in which case there is no ground lead **110**.

The amplitude modulation system of FIG. **12** includes a source **10** of sound waves which are amplified in preamplifier **130** and then applied to modulator **132** for amplitude modulating a power oscillator **134** whose amplitude modulated output is applied to the primary winding **136** of transformer **138** which has one terminal of its secondary winding **140** grounded and the other

one of its terminals connected to a pair of electrode assemblies of, for example, the type shown in FIG. 7.

The oscillator **134** may have a fixed frequency within, for example, the range of 60 to 100 kilohertz. An important advantage of such system is that the necessity of tuning of the oscillator to match the tissue impedance of different persons is obviated. This is due mainly to the connection of electrodes to the high side of the radio frequency recording winding **140** as illustrated in contrast to connecting electrodes directly across the secondary winding. Also contributing to this important advantage is the use of insulated electrodes. While the provision of metal protrusions of the character illustrated at **111** in FIG. **7** are not essential to the basic operation of the system of FIG. **12**, they are preferred in some instances because when contacted by the person's fingers or other exposed skin areas, thus effectively grounding the person, the intensity of received information is increased by, for example, in some cases **15** decibels without destroying the previousy mentioned advantage of not requiring a returning of the oscillator.

It is noted that the entire amplitude modulation system of FIG. **12** including, but not limited to, battery power supply and microphone may be completely housed in a single common metal housing **100** as typified in FIG. **6**. Two of such housings **100** in a single headset may be used in a steeo system thus supplying one stereo channel information on one side and the other stereo channel information on the other side of the person's head.

While the particular embodiments of the present invention have been shown and described, it will be obvious to those skilled in the art that changes and modifications may be made without departing from the invention in its broader aspects and, therefore, the aim in the appended claims is to cover all such changes and modifications as fall within the true spirit and scope of this invention.

I claim:

1. A method for providing the sensation of sound corresponding to sound waves in a subject comprising the steps of:

generating audio frequency signals corresponding to said sound waves,

generating high frequency carrier signal from a high frequency generator,

transforming said audio frequency signals into pulses having a pulse repitition rate corresponding to the amplitude of each of said audio frequency signals,

modulating said carrier signal by said pulses and amplitude modulating said carrier signal by said audio frequency signals thereby producing amplitude modulated pulsed carrier signals, and

coupling said amplitude modulated pulsed carrier signals to said subject for producing the sensation of sound.

2. A method for providing the sensation of sound as recited in claim **1** in which said coupling is a nonconductive coupling to said subject.

3. A method for providing the sensation of sound as recited in claim **1** wherein said subject is a person having an ear canal and said coupling includes sealing said ear canal.

4. A method for providing the sensation of sound as recited in claim **1** wherein said subject is a person having an ear canal and wherein said coupling includes pressing an outer electrode carrying said amplitude modulated pulsed carrier signal against the person's folded ear.

5. A method for providing the sensation of sound as recited in claim **1** wherein said coupling is accomplished using two electrodes, each connected to the same output terminal of a source of said amplitude modulated pulsed carrier signals with the other output terminal of said source being grounded.

6. A method for providing the sensation of sound as recited in claim **1** in which said coupling is accomplished via an ear mold filled with a conductive solution.

7. A method for providing the sensation of sound as recited in claim **1** wherein said coupling is accomplished via a container of insulating material filled with a fluid through which said signal is applied to said body.

8. A method for providing the sensation of sound as recited in claim **1** wherein said amplitude modulation is within the range of 10 to 60 per cent.

9. A method for providing the sensation of sound as recited in claim **1** wherein the pulse repetition rate of said pulses is approximately two to 10 times the frequency of said audio frequency signals.

10. A method for providing the sensation of sound as recited in claim **1** wherein the coupling is provided by an insulated electrode to which said amplitude modulated pulsed carrier signals are applied.

11. A method for providing the sensation of sound as recited in claim **10** in which said electrode is part of a mechanical, hand-held assembly having a grounded metallic element contactable by a person's finger.

12. A method for providing the sensation of sound as recited in claim **1** wherein the coupling is provided by an insulated electrode mounted on a telephone receiver.

13. A method for providing the sensation of sound corresponding to sound waves in a subject having an auditory nerve system comprising the steps of:

generating audio frequency signals corresponding to said sound waves,

generating intermediate frequency pulses from said audio frequency signals having a larger pulse repetition rate than said audio frequency signals,

amplitude modulating said intermediate frequency pulses by said audio frequency signals to produce modulated intermediate frequency pulses,

modulating the output of a high frequency generator by said modulated intermediate frequency pulses to produce modulated pulsed carrier signals, and

coupling said modulated pulsed carrier signals to said subject for excitation of the auditory nerve system.

14. A method for providing the sensation of sound as recited in claim **13** wherein the pulse repetition rate of said modulated pulses corresponds to the amplitude of said audio frequency signals.

15. A method for providing the sensation of sound as recited in claim **14** wherein the pulsed repetition rate of said modulated pulses is approximately two to 10 times the frequency of said audio frequency signals.

16. A system for the production of the sense of sound in a person's body comprising:

means for converting sound waves into audio frequency signals,

means connected to said converting means for generating intermediate frequency pulses having a

pulsed repetition rate greater than said audio frequency signals,

high frequency generator means for producing high frequency carrier waves having a pulse repetition rate substantially greater than the pulse repetition rate of the intermediate frequency pulses,

means connected to said high frequency generator means for modulating said carrier waves by said intermediate frequency pulses and for amplitude modulating said carrier waves by said audio frequency signals to produce modulated pulsed carrier signals, and

means for coupling said modulated pulsed carrier signals to said person's body whereby the sensation of sound corresponding to sound waves is produced.

17. A system as recited in claim **16** wherein said coupling means includes an electrode and insulation for insulating said electrode from the person's body.

18. A system as recited in claim **17** wherein said electrode forms part of a hand-held device having a grounded element for contact with the person's finger.

19. A system for the production of the sensation of sound in a person's body comprising:

means for converting sound waves into audio frequency signals,

means connected to said converting means for generating intermediate frequency pulses having a pulsed repetition rate greater than said audio frequency signals,

means for amplitude modulating said intermediate frequency pulses by said audio frequency signals to produce modulated intermediate frequency pulses,

high frequency generator means having an output for producing high frequency carrier waves having a pulse repetition rate substantially greater than the pulse repetition rate of the modulated intermediate frequency pulses,

means connected to said high frequency generator output for modulating said carrier waves by said modulated intermediate frequency pulses to produce modulated pulsed carrier signals, and

means for coupling said modulated pulsed carrier signals to said person's body whereby the sensation of sound corresponding to sound waves is produced.

* * * * *