T. A. EDISON.

SPEAKING TELEGRAPH.

No. 474,230. Patented May 3, 1892.

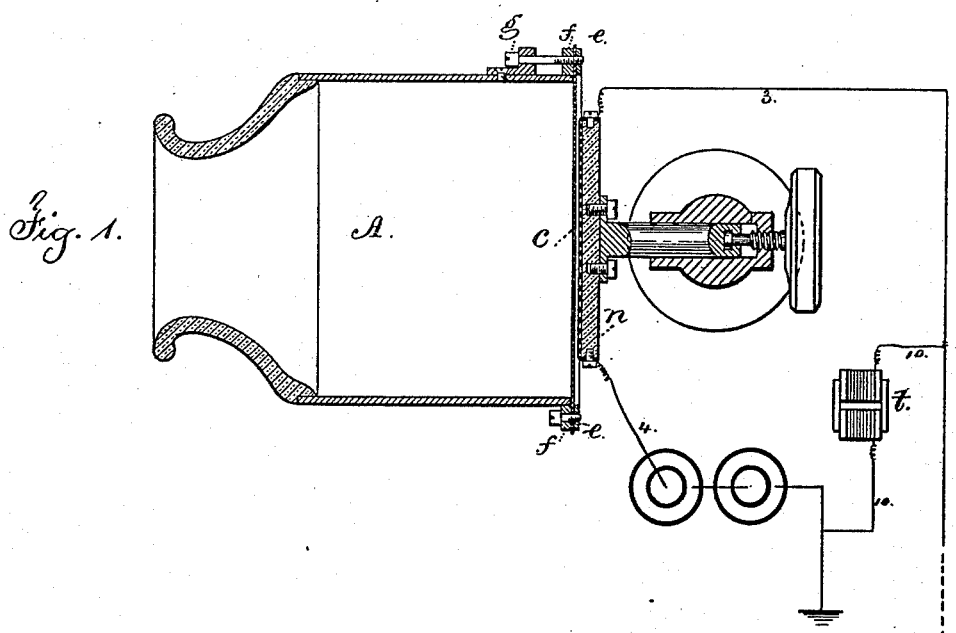

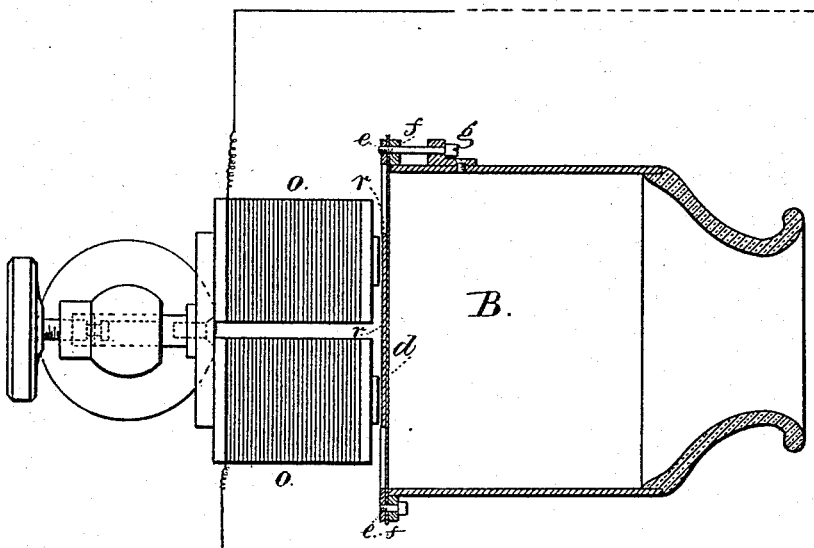

Witnesses,

Chas. H. Smith

Geo. T. Pinckney

Inventor.

Thomas A. Edison

per Lemuel W. Serrell

Atty.

THE NORRIS PETERS CO., PHOTO-LITHO., WASHINGTON, D. C.

UNITED STATES PATENT OFFICE.

THOMAS A. EDISON, OF MENLO PARK, NEW JERSEY, ASSIGNOR TO THE WESTERN UNION TELEGRAPH COMPANY, OF NEW YORK, N. Y.

SPEAKING-TELEGRAPH.

SPECIFICATION forming part of Letters Patent No. 474,230, dated May 3, 1892.

Application filed April 27, 1877. (Model.) Patented in England July 30, 1877, No. 2,909; in Canada October 20, 1877, No. 8,026; in France December 19, 1877, No. 121,687; in Belgium January 11, 1878, No. 43,984; in Austria-Hungary January 15, 1878; in Italy January 19, 1878, No. 9,791; in Germany January 23, 1878, No. 14,308; in Spain May 6, 1878, and in Russia February 15/27, 1882, No. 1,161.

To all whom it may concern:

Be it known that I, THOMAS A. EDISON, of Menlo Park, in the county of Middlesex and State of New Jersey, have invented an Improvement in Speaking-Telegraphs, (for which I have obtained foreign patents in the following countries: In Great Britain, dated July 30, 1877, No. 2,909; in France, dated December 19, 1877, No. 121,687; in Belgium, dated January 11, 1878, No. 43,984; in Italy, dated January 19, 1878, No. 9,791; in Spain, dated May 6, 1878; in Austria-Hungary, dated January 15, 1878; in Germany, dated January 23, 1878, No. 14,308; in Russia, dated February 15/27, 1882, No. 1,161, and in Canada, dated October 20, 1877, No. 8,026,) of which the following is a specification.

Telegraphs have been made to operate by sound and the movement of a diaphragm has been employed to open and close an electric circuit. In cases where reeds or bodies following the law of the pendulum have been made use of the same respond to changes of tone and produce musical sounds. In telegraphs that are intended for transmitting spoken words there is a difficulty arising from those words generally being uttered in one key or tone, or nearly so, and hence they are not distinct and clear.

This present invention I designate as a "telespecan" or "speaking-telegraph," because it is adapted to transmit spoken words regardless of the musical key.

In the drawings, Figure 1 is a section of the transmitting-instrument; and Fig. 2 is a similar view of the receiving-instrument, the wire connections between the two serving to illustrate the telegraph-line and electric circuits.

The resonators or sounding tubes or boxes A B are of any desired size, shape, or material. The box A is the one into which the words are uttered, and the box B or resonator is the responding part to which the attendant listens. The diaphragms *c d* are applied at the side or end of the respective boxes, and these should be provided with clamping-rings *e f* and tightening-screws *g*, somewhat on the plan of a kettle-drum, so that the diaphragms may be of the proper tension. I prefer and generally use sheet metal for these diaphragms, which may be of a suitable thickness, say one-eighth of an inch, more or less, according to the size of the instrument. In front of the diaphragm *c* of the transmitter I make use of a second plate or a disk *n*, of suitable material, having a conducting-surface. I have found that a disk of hard rubber coated with plumbago answers well; but a disk of some conducting metal or substance may be employed, or a plate of metal coated with some semi-conducting substance may be used. The circuit-wires 3 and 4 from the line and a battery or other source of electricity are connected to this apparatus either at opposite sides of the disk *n*, or one wire may be connected to said disk *n* and the other to the diaphragm *c*.

At the receiving-instrument there is an electro-magnet *o*, with its poles facing the diaphragm *d*, and the armature *r* is fastened to said diaphragm, or the diaphragm itself may form the armature if made of soft iron. The disk or plate is accurately adjusted to the proper proximity to the surface of the diaphragm, so that in a state of rest there will be little or no current passing from the battery upon the line; but the vibrations that are received by the diaphragm *c* from the voice cause the electric energy on the line to increase and decrease, according to the intimacy of contact between the vibrating diaphragm and the surface of the adjacent disk, for if the electric conductors are connected to the diaphragm and disk, respectively, the current that passes will be pulsated and raised or lowered by the intimacy of contact of the surfaces or by the variable resistance where the conductors are in contact with a surface of plumbago or other poor conductor of electricity, the current being increased by the diaphragm affording less resistance than the plumbago, when the vibration of the diaphragm brings the surfaces into contact to a greater or less extent. In all instances the diaphragm coming into contact with the disk to a greater or less extent, according to the amplitude of its vibration, lessens or increases the distance that the elec-

tric current is obliged to travel over the surface of the disk of plumbago or similar inferior conducting material, and consequently the resistance in the line and rise and fall of electric tension.

By this phonetic or speaking telegraph the diaphragm at the receiving-station will be influenced by the action of the electro-magnet in the same proportion as the rise and fall of electric energy produced by the vibrations of the voice, regardless of the musical key, and the utterances at one end are reproduced at the other with great clearness and accuracy.

The electro-magnet or helix *t*, introduced in the branch 10 between the main line and the earth, is adjusted by a rheostat or otherwise to neutralize the static charge and discharge in the line as heretofore employed by me in chemical and other telegraphs, and hence any false vibration from the effect of static charge or discharge are prevented.

The static resistance to a pulsation is lessened by the action of the electro-magnet helix, because in practice the eletro-magnet in the circuit aids the pulsation, so that it becomes more distinct at the receiving-station, and when the pulsation ceases upon the line there is a static discharge that is met and neutralized by the discharge of the electro-magnet, so that there is no prolongation of the pulsation. This is of great importance in speaking-telegraphs in making the sounds clear and distinct instead of the tones running into each other.

I am aware that in kettle-drums and banjos the diaphragm is provided with screws for tightening the same.

I do not claim in my present instrument the combination, with the diaphragm, of a ring or frame, and screws for adjusting the parts.

I claim as my invention—

1. In a speaking-telegraph transmitter, the combination of a metallic diaphragm and disk of plumbago or equivalent material, the contiguous faces of said disk and diaphragm being in contact, substantially as described.

2. As a means for effecting a varying surface contact in the circuit of a speaking-telegraph transmitter, the combination of two electrodes, one of plumbago or similar material, and both having broad surfaces in vibratory contact with each other, substantially as described.

Signed by me this 18th day of April, A. D. 1877.

THOS. A. EDISON.

Witnesses:

GEO. T. PINCKNEY,
HAROLD SERRELL.