US00D783324S

(12) United States Design Patent

Akana et al.

(10) Patent No.: US D783,324 S
(45) Date of Patent: ** Apr. 11, 2017

(54) **TABLE**

(71) Applicant: **Apple Inc.**, Cupertino, CA (US)

(72) Inventors: **Jody Akana**, San Francisco, CA (US); **Bartley K. Andre**, Palo Alto, CA (US); **Shota Aoyagi**, San Francisco, CA (US); **Anthony Michael Ashcroft**, San Francisco, CA (US); **Jeremy Bataillou**, San Francisco, CA (US); **Daniel J. Coster**, San Francisco, CA (US); **Daniele De Iuliis**, San Francisco, CA (US); **Christopher M. Green**, Woodside, CA (US); **M. Evans Hankey**, San Francisco, CA (US); **Julian Hoenig**, San Francisco, CA (US); **Richard P. Howarth**, San Francisco, CA (US); **Jonathan P. Ive**, San Francisco, CA (US); **Duncan Robert Kerr**, San Francisco, CA (US); **Kully Kraig Mandon**, San Francisco, CA (US); **Matthew Dean Rohrbach**, San Francisco, CA (US); **Peter Russell-Clarke**, San Francisco, CA (US); **Benjamin Andrew Shaffer**, San Jose, CA (US); **Jonathan P. Siegel**, San Francisco, CA (US); **Mikael Silvanto**, San Francisco, CA (US); **Christopher J. Stringer**, Woodside, CA (US); **Eugene Antony Whang**, San Francisco, CA (US); **Rico Zörkendörfer**, San Francisco, CA (US)

(73) Assignee: **Apple Inc.**, Cupertino, CA (US)

(**) Term: **15 Years**

(21) Appl. No.: **29/577,887**

(22) Filed: **Sep. 16, 2016**

Related U.S. Application Data

(63) Continuation of application No. 29/501,841, filed on Sep. 9, 2014, now Pat. No. Des. 766,633, and a (Continued)

(51) **LOC (10) Cl.** **06-03**

(52) **U.S. Cl.**
USPC **D6/691.1**

(58) **Field of Classification Search**
USPC D6/349, 684, 685, 687, 690, 691, 691.2, D6/691.3, 691.7, 691.8, 707, 707.19
(Continued)

(56) **References Cited**

U.S. PATENT DOCUMENTS

D90,849 S 10/1933 Kayser
D96,986 S 9/1935 Jewell
(Continued)

OTHER PUBLICATIONS

SEI Coffee Table—Amazon.com https://www.amazon.com/SEI-Coffee-Table-Light-Brown/dp/B004UVBKWW retrieved from the internet on Jan. 30, 2017.*
(Continued)

Primary Examiner — Mary Ann Calabrese
(74) *Attorney, Agent, or Firm* — Sterne, Kessler, Goldstein & Fox P.L.L.C.

(57) **CLAIM**

The ornamental design for a table, as shown and described.

DESCRIPTION

FIG. **1** is a front perspective view of a table showing the claimed design;
FIG. **2** is a rear perspective view thereof;
FIG. **3** is a front view thereof
FIG. **4** is a rear view thereof;
FIG. **5** is a right side view thereof
FIG. **6** is a left side view thereof;
FIG. **7** is a top view thereof; and,
FIG. **8** is a bottom view thereof.
The broken lines in the figures show portions of the table that form no part of the claimed design.

1 Claim, 7 Drawing Sheets

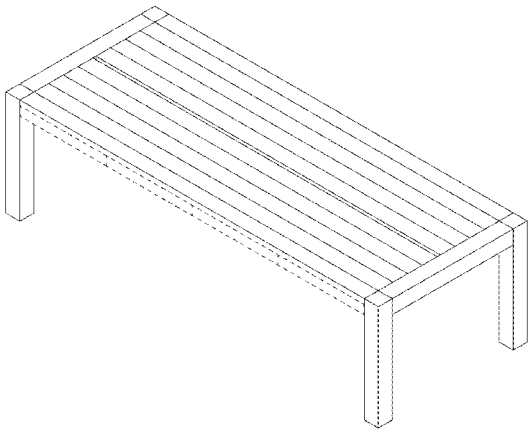

Related U.S. Application Data

continuation of application No. 29/500,951, filed on Aug. 29, 2014, now Pat. No. Des. 766,631, and a continuation of application No. 29/495,788, filed on Jul. 3, 2014, now Pat. No. Des. 766,632, and a continuation of application No. 29/493,879, filed on Jun. 13, 2014, now Pat. No. Des. 766,630, said application No. 29/501,841 is a continuation of application No. 29/500,951, filed on Aug. 29, 2014, now Pat. No. Des. 766,631, which is a continuation-in-part of application No. 29/495,788, filed on Jul. 3, 2014, now Pat. No. Des. 766,632, which is a continuation of application No. 29/493,879, filed on Jun. 13, 2014, now Pat. No. Des. 766,630.

(58) **Field of Classification Search**

CPC A47B 7/00; A47B 13/00; A47B 13/003; A47B 13/02; A47B 13/04; A47B 13/08; A47B 2200/0016; A47B 95/0043; B25H 1/02

See application file for complete search history.

(56) **References Cited**

U.S. PATENT DOCUMENTS

3,289,616	A	*	12/1966	Donihi	B25H 1/02 108/161
D245,135	S	*	7/1977	Saltz	D6/691.1
D385,728	S	*	11/1997	Mulligan	D6/691.1
D414,354	S		9/1999	Gower	
D442,391	S		5/2001	Wu	
D448,211	S		9/2001	Schulte et al.	
D484,717	S		1/2004	de Blois	
D516,842	S	*	3/2006	Cross	D6/691.1
D522,274	S		6/2006	Coval	
D527,928	S		9/2006	Spector et al.	
D556,473	S	*	12/2007	Good	D6/691.1
D591,079	S		4/2009	Singler et al.	
D591,979	S		5/2009	Singler et al.	
D657,978	S		4/2012	Hamm et al.	
D678,696	S		3/2013	Hamm et al.	
D679,521	S		4/2013	Hamm et al.	
D688,494	S		8/2013	Hamm et al.	
D693,156	S		11/2013	Hamm et al.	
D713,658	S		9/2014	Tio et al.	
D724,388	S		3/2015	Smeja	
D725,947	S		4/2015	Tio et al.	
D728,281	S		5/2015	Heirakuji et al.	
D729,560	S		5/2015	Hamm et al.	
D734,078	S	*	7/2015	Bougay	D6/691.1
D734,965	S		7/2015	Tio et al.	
D742,666	S		11/2015	Akana	
D753,418	S	*	4/2016	Hsu	D6/675
D758,106	S		6/2016	Hamm et al.	
D766,630	S	*	9/2016	Akana	D6/691.1
D766,631	S	*	9/2016	Akana	D6/691.9
D776,471	S	*	1/2017	Mandon	D6/691.1
2010/0043679	A1	*	2/2010	Laws	A47B 95/043 108/64

OTHER PUBLICATIONS

Neil Hughes, "Apple retail stores 'bulging at the seams' at 8400 average square feet," Appleinsider.com, dated May 8, 2012, accessed at <http:1/appleinsider.com/articles/12/05/08/apple_retail_stores_bulging_at_the_seams_at_8400_average_square_feet>, accessed on Oct. 10, 2014, 2 pages.

Valentina Palladino, "Apple Store Receives Trademark for 'Distinctive Design and Layout,'" Wired.com, dated Jan. 30, 2013, accessed at <http://www.wired.com/2013/01/apple-store-trademark/>, accessed on Oct. 10, 2014, 2 pages.

U.S. Appl. No. 29/493,878, filed Jun. 13, 2014; Akana et al.

U.S. Appl. No. 29/501,029, filed Aug. 29, 2014; Akana et al.

* cited by examiner

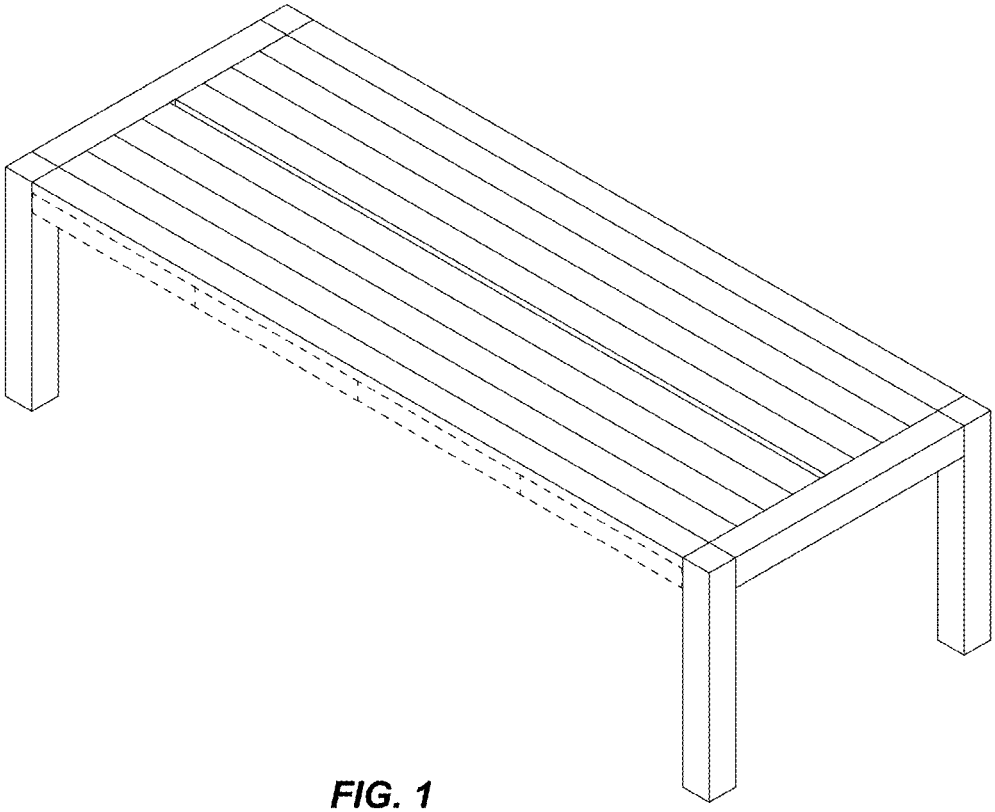

FIG. 1

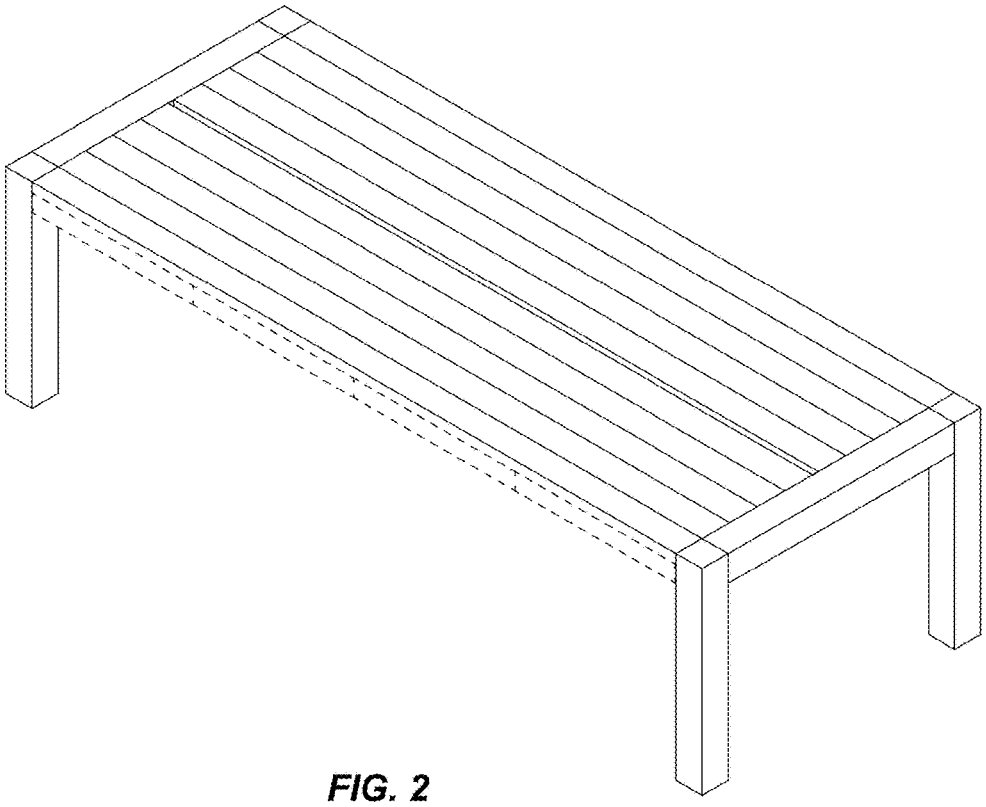

FIG. 2

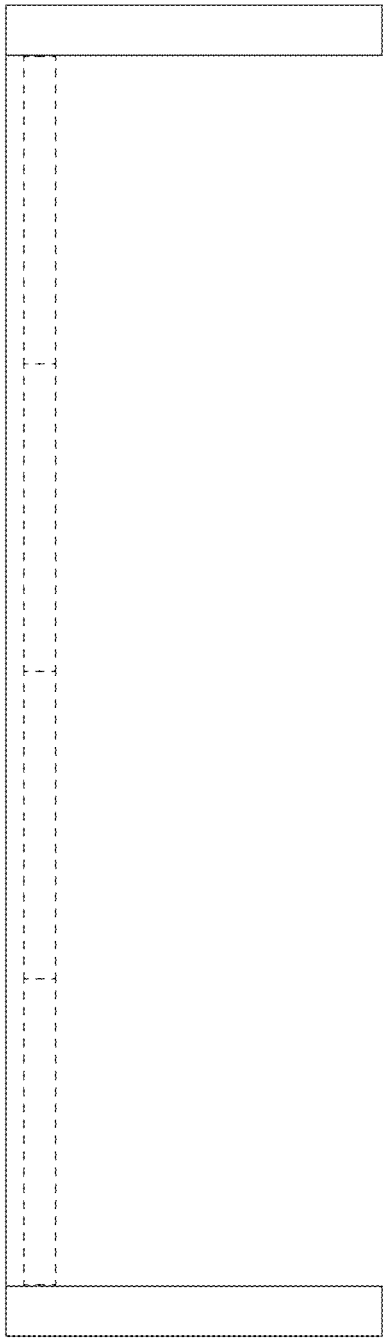

FIG. 3

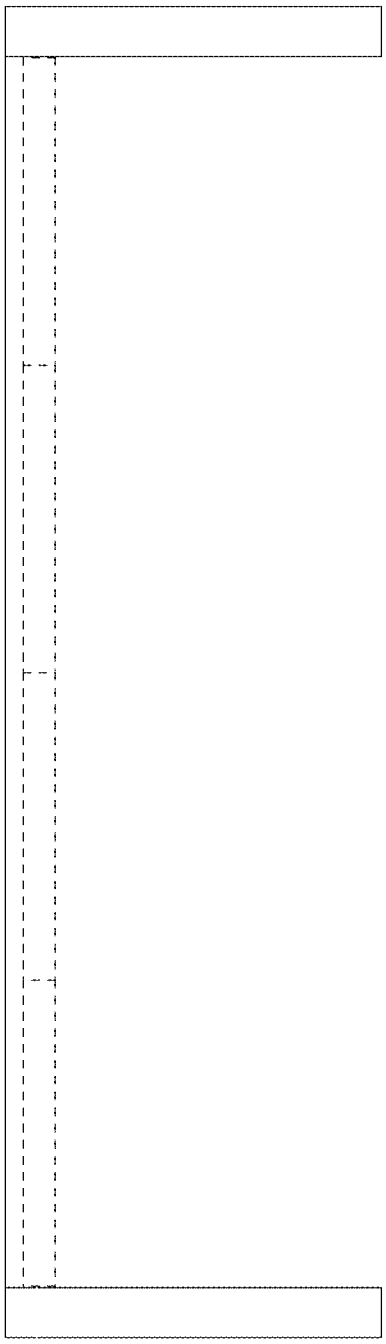

FIG. 4

FIG. 5

FIG. 6

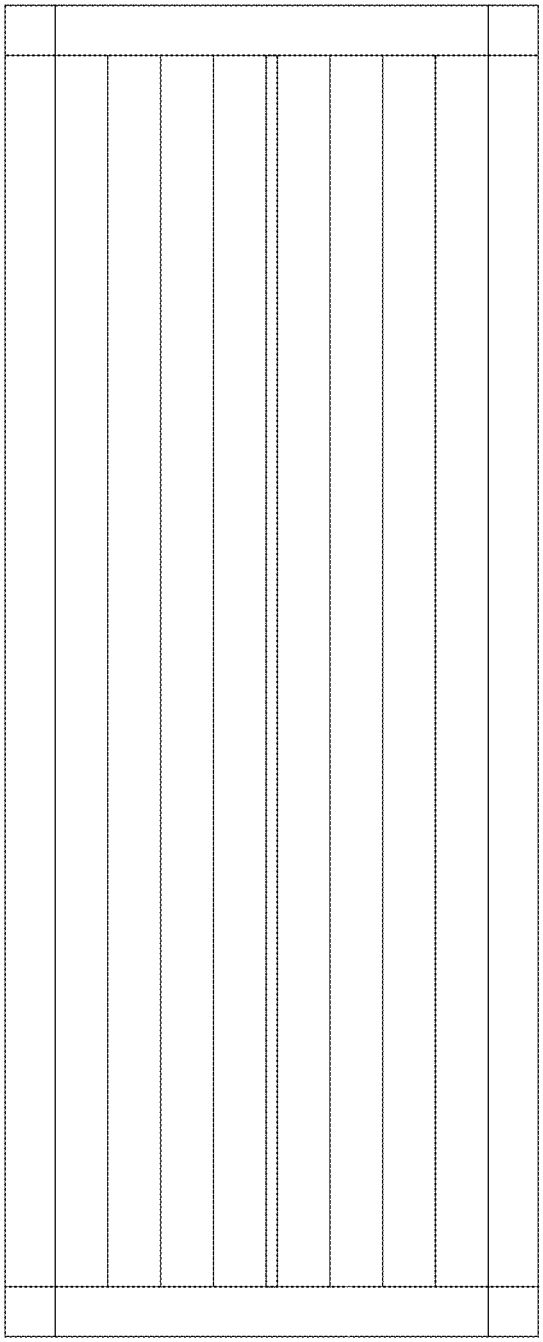

FIG. 7

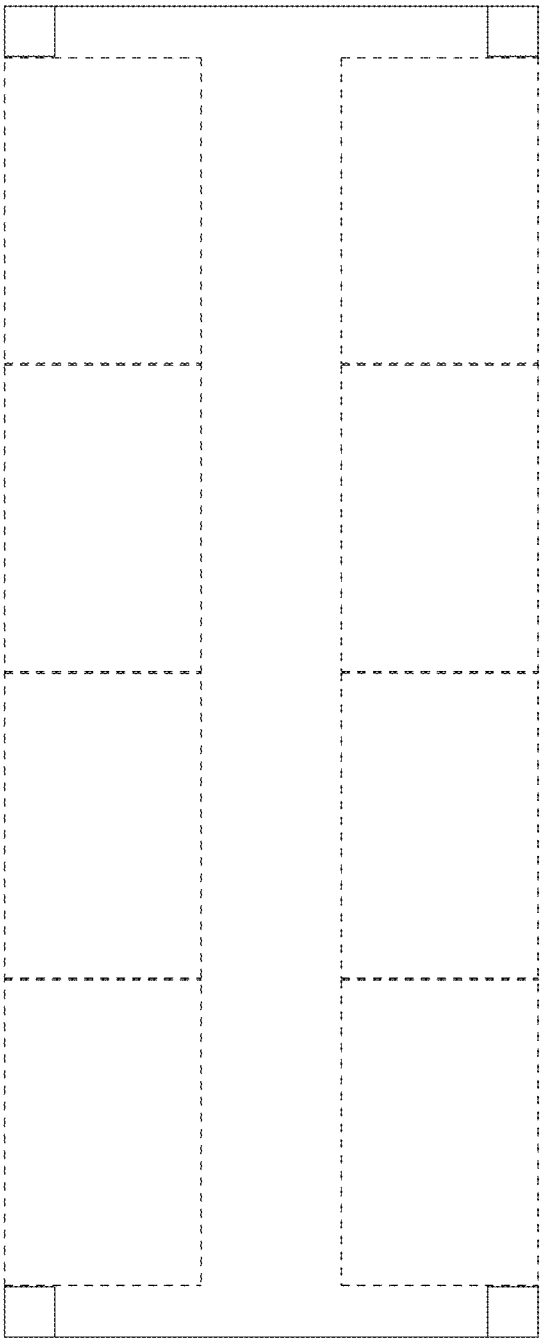

FIG. 8