Feb. 4, 1930. H. W. SELLNER 1,745,719

AMUSEMENT DEVICE

Filed April 24, 1926 2 Sheets-Sheet 1

Fig 1.

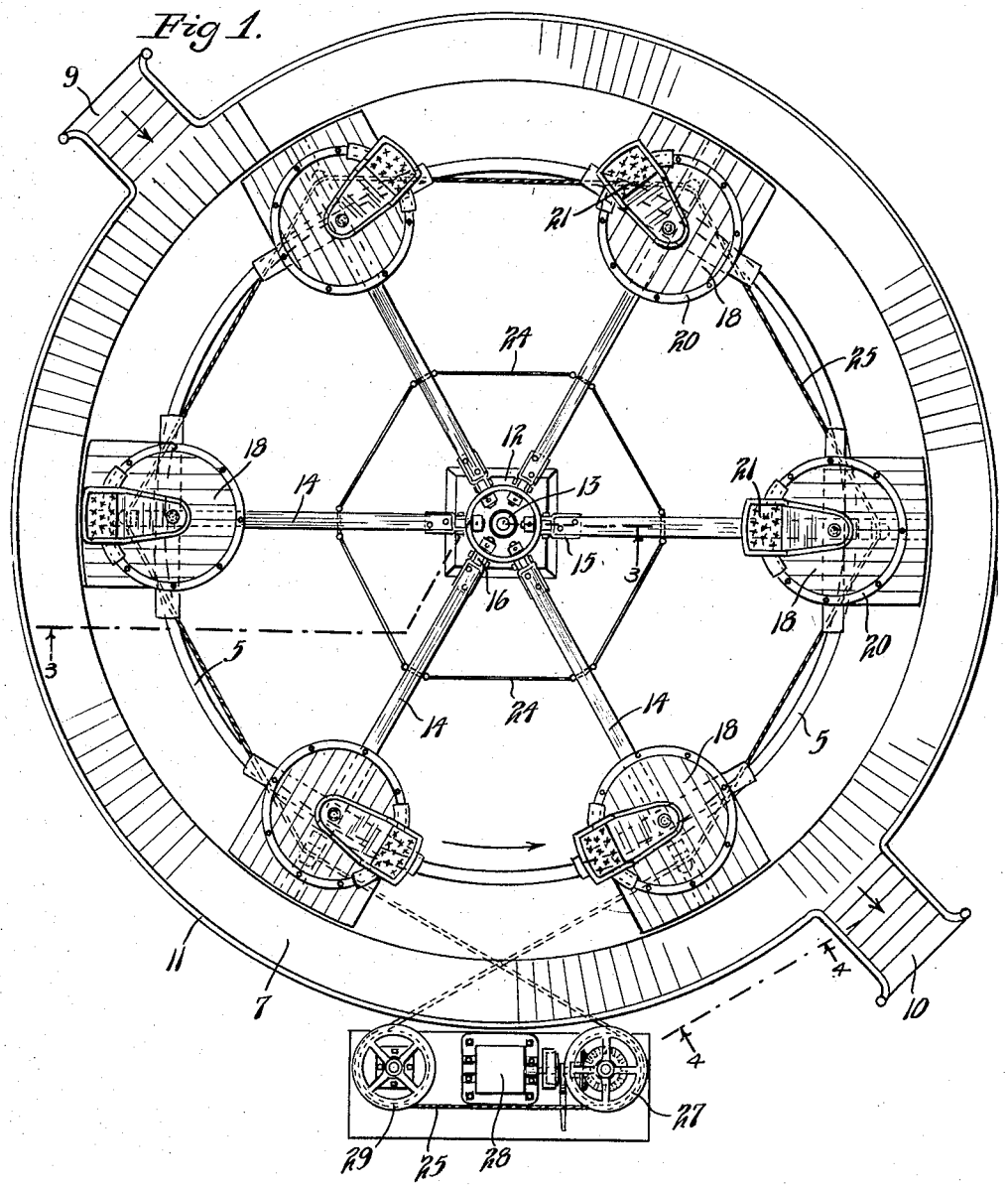

Inventor
HERBERT W. SELLNER
By his Attorneys

Williamson Reifl Williamson

Feb. 4, 1930. H. W. SELLNER 1,745,719

AMUSEMENT DEVICE

Filed April 24, 1926 2 Sheets-Sheet 2

Fig. 2.

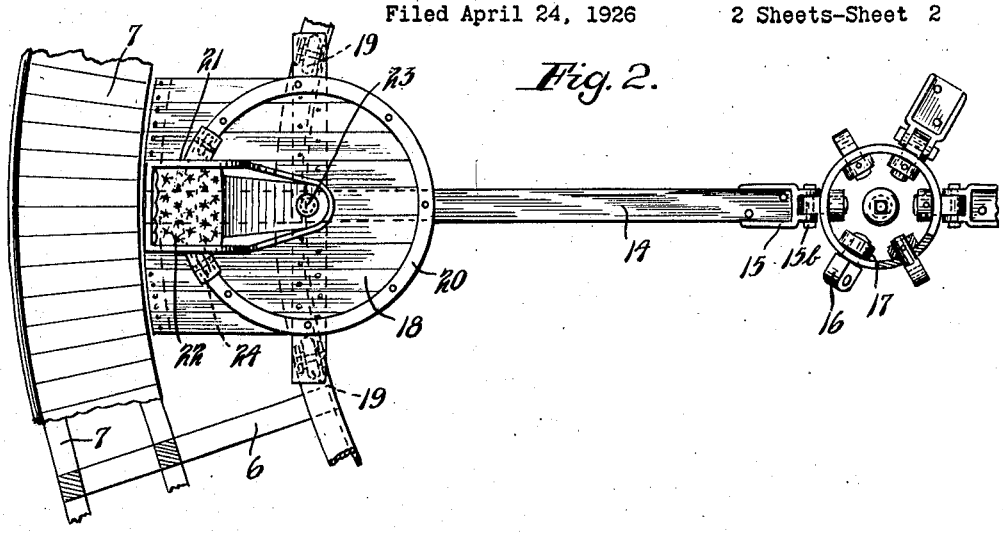

Fig. 3.

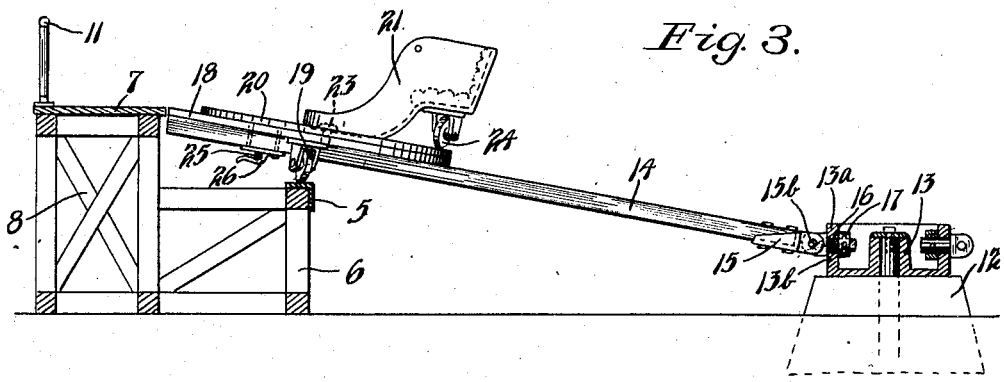

Fig. 4.

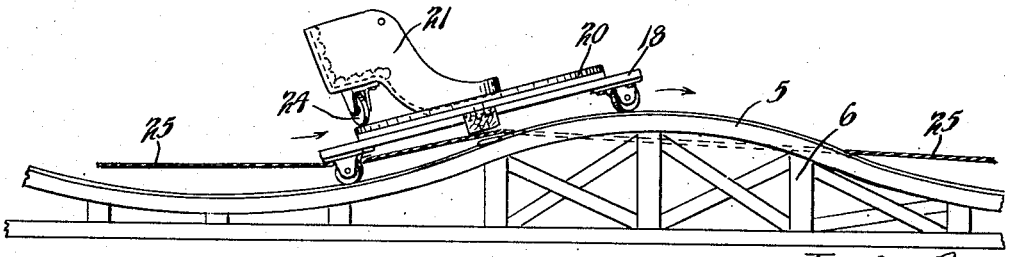

Inventor
HERBERT W. SELLNER
By his Attorneys

Williamson Reid & Williamson

Patented Feb. 4, 1930

1,745,719

UNITED STATES PATENT OFFICE

HERBERT W. SELLNER, OF FARIBAULT, MINNESOTA

AMUSEMENT DEVICE

Application filed April 24, 1926. Serial No. 104,316.

This invention relates to amusement apparatus and especially to amusement apparatus designed for parks and resorts where it is desired to accommodate a large number of pleasure seekers.

It is the main object of my invention to provide a new and improved amusement apparatus which will furnish pleasurable and unexpected sensations, may be operated economically and will have a high degree of safety.

A further object is to provide amusement apparatus wherein the riders will be moved in general through an orbit and will unexpectedly swing, snap from side to side or rotate without in any way being able to figure what movement may next take place in the car.

It is a more specific object to provide in such a device, a generally circular track provided with a plurality of undulations over which tiltable platforms are passed, each of the platforms carrying a passenger car mounted for violent oscillation and rotation thereon, the oscillation of the car relative to the platform being determined by the tilted position of the platform.

These and other objects of the invention will be apparent from the following description made in connection with the accompanying drawings, wherein like characters refer to similar parts throughout the several views, and in which

Fig. 1 is a plan view of a preferred embodiment of the invention.

Fig. 2 is a plan view of one of the units on a larger scale.

Fig. 3 is a vertical section taken on the line 3—3 of Fig. 1 showing one of the units in side elevation, and

Fig. 4 is a fragmentary end elevation of one of the units taken on the line 4—4 of Fig. 1.

In the preferred embodiment of my device illustrated in the drawings, an undulated circular track 5 is provided mounted on a suitable frame work or scaffold 6. Track 5 is preferably relatively narrow and includes a plurality of depressed portions and a plurality of crests or swells. A circular walk 7 is disposed about the outer side of track 5 undulated symmetrically with said track. Walk 7 is supported on a frame work 8 and has the entrance 9 at one side thereof and the exit 10 preferably at the opposite side. A railing 11 is mounted on the outer side of the walk.

In the center of track 5 I provide a heavy standard or foundation 12 on which a heavy hub 13 is revolubly mounted. Hub 13 has an annular vertically extending flange 13^a provided with a plurality of horizontal bearings 13^b therein. A plurality of heavy carrier arms 14 are connected by universal or knuckle joints to the hub 13. The connections may be made as illustrated by rigidly securing to the inner end of each of arms 14 a strap 15 having the spaced ears 15^b hinged to the outer end of a relatively heavy pin 16. Pins 16 are journaled in the bearings 13^b and are retained on hub 13 by means of set screw collars 17 secured to the inner ends thereof. A flat platform 18 is rigidly secured to the outer end of each of carrier arms 14 having its outer edge extending in the arc of a circle with hub 13 as the center.

Each of the platforms 18 is supported on the track 5 preferably by means of a pair of wheels 19. The axes of wheels 19 extend radially with respect to hub 13.

On each of the platforms 18 an annular track 20 is mounted having its center extending approximately over the main track 5. A car 21 is mounted for oscillation on each of the platforms 18 having a passenger seat 22 in the outer portion thereof and pivoted eccentrically by a heavy bolt 23 to platform 18 at the center of track 20. The outer end of car 21 is supported on a pair of wheels 24 engaging the track 20 and having their axes disposed radially of pivot bolt 23 as desired.

It will be seen that the cars 21 are mounted for oscillation depending upon the pitch of the platform 18 and that the passengers seated adjacent the outer ends of the cars will be swung swiftly from side to side as the cars oscillate. The outer edges of platforms 18 are adapted to substantially regis-

ter with the inner edges of the walk 7 permitting the participants to easily mount the platforms and seat themselves in the cars.

Links or cables 24 are employed to interconnect the intermediate portions of the various carrier arms 14, bracing said arms and keeping the same at the proper radially spaced position. The device may be revolved in any suitable manner but is preferably driven by means of an endless flexible member or cable 25 surrounding the several platforms 18 and engaging detents or hooks 26 mounted on the under side of each platform thereof. Cable 25 is crossed and passed over a driving pulley 27 driven by bevel gear connection from a motor or suitable source of power 28. Cable 25 is also passed about a belt tightener 29 mounted adjacent motor 28 on a slidable bearing (not shown) yieldingly held outwardly of said motor.

Operation

The operation of the above described device may be briefly summarized as follows: The passengers are admitted to the walk 7 through the entrance 9 and may pass around the device to enter the several cars 21. The power will be applied through the motor 28 and the revoluble frame will be driven in the direction indicated by the arrows in Fig. 1. Each of the platforms 18 is mounted for tilting movement both from end to end and side to side. This is accomplished by the knuckle joint connections between the inner ends of the carrier arms 14 and the hub 13, as described. Since the outer ends of carrier arms 14 with the several platforms thereon are supported by means of a pair of wheels 9 engaging track 5 and having their axes disposed radially of hub 13, the several platforms 18 will be tilted from side to side and also from end to end as they pass over the undulations of the track. Thus, as shown in Fig. 3, when the passenger is passing over a crest or swell of the track, platform 18 will be tilted sidewise and inwardly as the pivotal connection between the carrier arm 14 and the boss 13 is below the level of the crest. Moreover, as shown in Fig. 4, as the passenger is moved toward the crest the platform 18 will be tilted endwise and upwardly. The tilting of the platforms 18 in either sidewise or endwise direction cause the cars 21 to be swung or swerved sharply in one direction or the other. The oscillatory movement of the cars is very irregular and cannot be predetermined by the rider. Since the platforms are tiltable on two different axes the cars may thus be faced rearwardly at one moment and oppositely at the next moment and they may be swung to one side of their respective platform or the other side, and during the ride around the undulated track they will have completed several movements about their entire annular tracks 20. Oftentimes the effect of the combined tilting of the platforms on two axes will cause the cars to rotate or spin, sometimes completing two or more rotations. Complete rotation occurs when one of the platforms ascends a crest with its passenger car substantially balanced in position to swing inwardly and forwardly. The passage over the crest and down the descent will sometimes swing the car through 360° and in position to be partially rotated by the next crest and descent. To a person observing the entire device the irregularity of the oscillations and rotations of the various cars will be observed at one instant. Several of the cars will be violently whipped or swung through 180° to 240°, while a few of the cars will be rotated or spun.

The positions of the several cars relative to their platforms is of course affected by centrifugal force but in constructing the device the hub 13 is disposed slightly below the mean level between the crests and valleys of the main track. At its mean height on the track therefore, each of the platforms 18 will be tilted slightly inwardly and sidewise, thus overcoming the effect of the centrifugal force.

The suddenness and speed of the irregular swerves or oscillations of the cars may of course be varied by the abrupt or gradual ascent of the crests formed in the track.

From the foregoing description it will be observed that I have invented a new and pleasurable amusement device affording intermittent and unexpected thrills to the passenger thereof. The revoluble frame needs only to be driven at a fair speed to attain the results described, thereby insuring the safety of the passenger and requiring only a small amount of power.

It will, of course, be understood that various changes may be made in the form, detail, proportions and arrangement of parts without departing from the scope of the invention.

What is claimed is—

1. In amusement apparatus an undulated circular track, a standard mounted interiorly and centrally of said track, a revoluble member mounted on said standard and carrying an annular flange, a plurality of radially disposed pins journaled for oscillation in said annular flange, a plurality of radially disposed carrier arms extending between said standard and said track and hinged at their inner ends to said pins, wheels supporting the outer ends of said carrier arms from said track, supports adjacent the outer ends of each of said carrier arms and a passenger car eccentrically mounted on each of said supports and adapted to be sharply oscillated according to the tilted position of said supports.

2. An amusement apparatus comprising a plurality of arms extending substantially radially outwardly from a center, each of said arms being journaled for swinging movement

in a substantially vertical plane and for limited rotatory movement about an axis extending substantially radially of said center, a platform carried by each arm, a passenger car eccentrically mounted for free rotation on each platform about a substantially vertical axis, and means to successively cause each platform to tilt from end to end and alternately from side to side in opposite directions, whereby each car carried thereby is individually caused to oscillate or spin about its axis.

3. An amusement apparatus comprising a plurality of arms extending substantially radially outwardly from a central pivot each of said arms being journaled for swinging movement in a substantially vertical plane and for limited rotary movement about an axis extending substantially radially of said pivot, a platform carried by each arm, a passenger car eccentrically mounted for free rotation on each platfrom about a substantially vertical axis, an undulated track and means secured to each platform at spaced points for engagement with said track whereby each platform is caused to alternately tilt from side to side in opposite directions to individually oscillate or spin the car carried thereby about its axis.

4. An amusement apparatus comprising a central pivot, an arm extending radially of said pivot, said arm being free to swing in a substantially vertical plane and to rotate about an axis extending lengthwise thereof, a platform secured to said arm, a passenger car eccentrically pivoted to said platform and free to swing about its pivot, an undulated track arranged beneath said platform and bearings secured to said platform to support it on said track, said bearings being widely spaced apart, and means to cause said arm to move around said track.

5. In amusement apparatus an endless undulated track, an arm or sweep disposed radially of said track, means for causing said arm to travel around said track, a pair of wheels disposed in tandem supporting the outer end of said sweep from said track, a platform fixed adjacent the outer end of said sweep, said sweep being mounted for oscillation on its longitudinal axis and being also mounted for oscillation on an axis disposed at right angles to said longitudinal axis, whereby said platform will be tilted from side to side and from end to end as said arm travels over the undulations of said track, and a passenger car freely supported on said platform for independent movement thereon in a circular path, the gyratory movement of said platform causing said car to sometimes spin and sometimes oscillate.

6. In amusement apparatus, a circular undulated track, a revoluble member mounted concentrically of said track, a plurality of arms or sweeps connected with said revoluble member and disposed radially of said track, each of said sweeps being supported from said track by means of a pair of wheels disposed in tandem, a platform fixed adjacent the outer end of each of said sweeps, said sweeps being mounted for oscillation on their longitudinal axes and being also mounted for oscillation on axes disposed at right angles to said longitudinal axes whereby said platforms will be tilted from side to side and also from end to end as said arm travels over the undulations of said track, and a passenger car freely supported on each of said platforms for independent movement thereon in a circular path, the gyratory movement of said platform causing said cars to sometimes spin and sometimes oscillate.

7. An amusement apparatus comprising a central pivot, a sweep or arm extending radially of said pivot, a connection between the inner end of said arm and said pivot comprising a pin journaled on a substantially horizontal axis in said pivot, and a hinge connection between the outer end of said pin and said arm to permit swinging of said arm in a substantially vertical plane and rotation of said arm about an axis extending lengthwise thereof, a platform secured to said arm, a passenger car pivoted to said platform and free to swing about its pivot, an undulated track arranged beneath said platform and bearings secured to said platform to support it on said track, said bearings being spaced apart and means to cause said arm to move around said track.

8. In an amusement device, a centrally located hub, a plurality of rotatable and radially extending sweeps having their inner ends pivotally connected to said hub, an undulatory circular track, means on the outer ends of the sweeps engaging the track, a plurality of platforms supported by the sweeps, passenger cars pivotally mounted on the platforms for free rotation about their pivotal points, said pivotal points being located substantially centrally of the platforms and eccentrically of the cars.

9. In an amusement device, a central rotatable member, platforms revolving about the axis of said central member at some distance therefrom, a track surrounding said central member and having undulations, means engaging said track at circumferentially spaced points thereon forming supports respectively for each of said platforms, means connecting each of said platforms with said central member for causing an inward and outward tilting movement of said platforms and for also permitting a tilting movement of said platforms about axes substantially radial to said central member as said platform supporting means follows the undulations of said track, and passenger cars mounted on said platforms for unrestricted eccentric rotative movement thereon.

10. In an amusement device, a central rotatable member, platforms revolving about the axis of said central member at some distance therefrom, a track surrounding said central member and having undulations, means engaging said track at circumferentially spaced points thereon forming supports respectively for each of said platforms, radially extending elongated means between said central rotatable member and said platforms for causing an inward and outward tilting movement of said platforms and for also permitting a tilting movement of said platforms about axes substantially radial to said central member as said platform supporting means follow the undulations of said track, and passenger cars mounted on said platforms for unrestricted eccentric rotative movement thereon.

In testimony whereof I affix my signature.

HERBERT W. SELLNER.