US00D388117S

United States Patent [19]

Van Halen et al.

[11] Patent Number: Des. 388,117

[45] Date of Patent: **Dec. 23, 1997

[54] GUITAR PEGHEAD

[75] Inventors: **Edward Van Halen**, 6255 Sunset Blvd, Suite 2000, Los Angeles, Calif. 90028; **Hartley D. Peavey**; **Jim DeCola**, both of Meridian, Miss.

[73] Assignee: **Edward Van Halen**, Los Angeles, Calif.

[**] Term: **14 Years**

[21] Appl. No.: **41,346**

[22] Filed: **Jul. 12, 1995**

[51] **LOC (6) Cl.** **17-03**

[52] **U.S. Cl.** **D17/20**

[58] **Field of Search** ..... D17/14, 15, 18–20; 84/267, 290–293, 304, 314 N

[56] **References Cited**

U.S. PATENT DOCUMENTS

D. 191,958	12/1961	Hopper	D17/14
D. 203,770	2/1966	Burns	D17/14
D. 211,133	5/1968	Holly	D17/20
D. 242,648	12/1976	Fields	D17/14
D. 251,670	4/1979	Soika et al.	D17/20
D. 254,792	4/1980	Edwards	D17/14
D. 259,199	5/1981	Kelly	D17/14
D. 266,003	8/1982	Lieber	D17/14
D. 269,523	6/1983	Burge	D17/14
D. 269,524	6/1983	Burge	D17/14
D. 275,963	10/1984	Smith	D17/20
D. 276,817	12/1984	Kaman	D17/14
D. 282,177	1/1986	Peavey	D17/20
D. 284,198	6/1986	Peavey	D17/20
D. 286,299	10/1986	Peavey	D17/20
D. 309,468	7/1990	Everett	D17/14
D. 320,615	10/1991	Lendrum	D17/14
D. 323,669	2/1992	Pagelli	D17/14
D. 342,964	1/1994	Harriott	D17/20
2,960,900	11/1960	Fender	84/290
3,091,150	5/1963	Sceusa	84/293
3,237,502	3/1966	Moseley	84/267
3,665,490	5/1972	Oskar	84/267
3,771,408	11/1973	Wright	84/291
4,377,101	3/1983	Santucci .	
4,483,233	11/1984	Benson	84/267
4,574,678	3/1986	Edwards	84/314 N

OTHER PUBLICATIONS

Guitar Player, Mar. 1988 p. 142 (Vigier Solidbody).

Primary Examiner—Philip S. Hyder
Assistant Examiner—Adir Aronovich
Attorney, Agent, or Firm—Graham & James LLP

[57] **CLAIM**

The ornamental design for a guitar peghead, as shown and described.

DESCRIPTION

FIG. **1** is a front top perspective view of a guitar peghead showing our new design;
FIG. **2** is a top plan view thereof;
FIG. **3** is a first side elevational view thereof;
FIG. **4** is a second side elevational view thereof;
FIG. **5** is a bottom plan view thereof; and,
FIG. **6** is a front elevational view thereof.
The broken lines shown in FIG. **1** are for illustrative purposes only and form no part of the claimed design. Further, to avoid an obstruction of the environmental structure shown by the broken lines, FIG. **1** does not show the opening for tuning pegs.

1 Claim, 2 Drawing Sheets

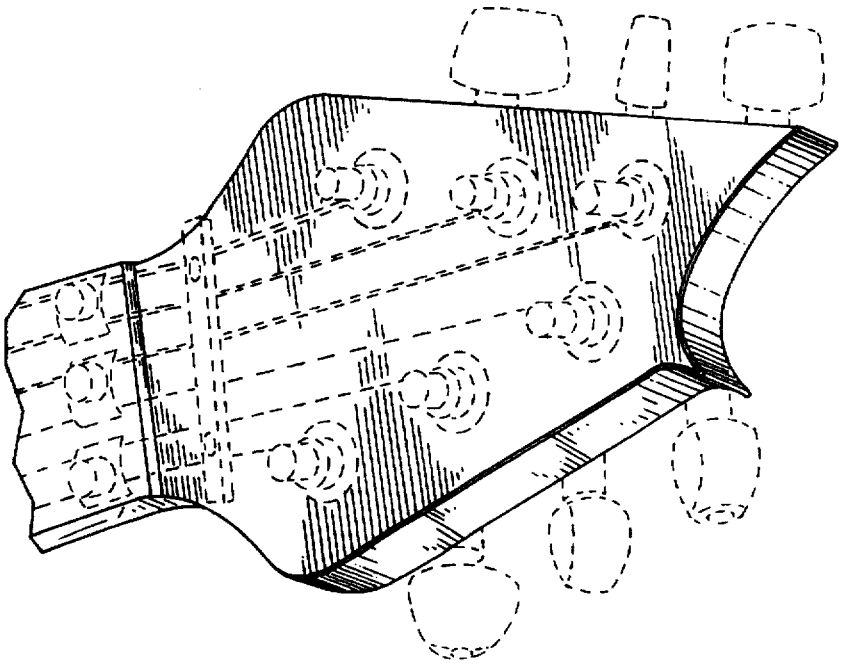

FIG. 1

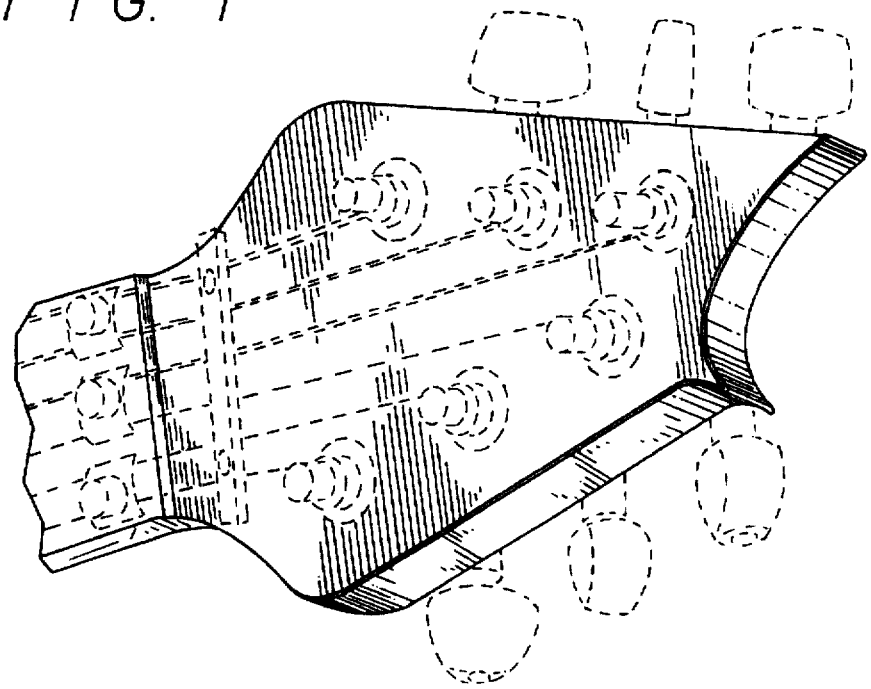

FIG. 2

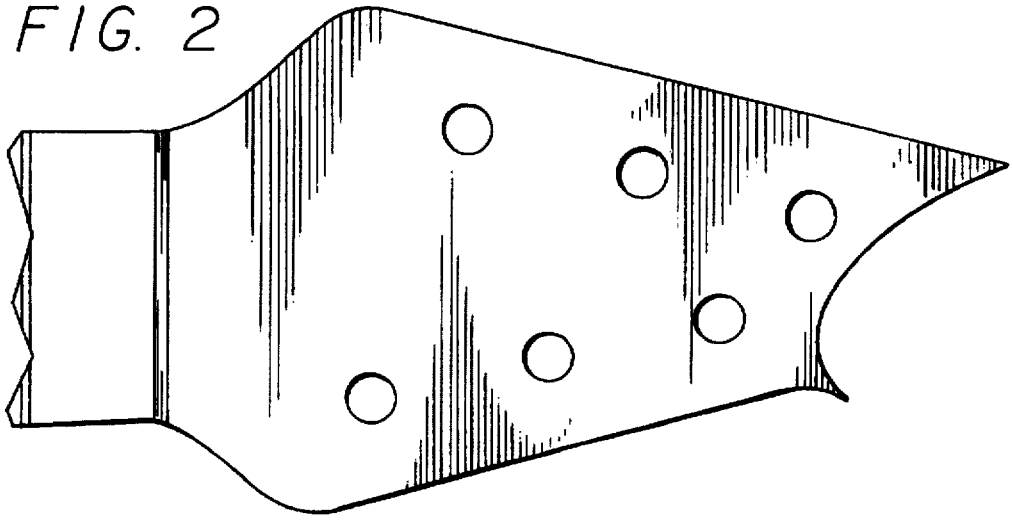

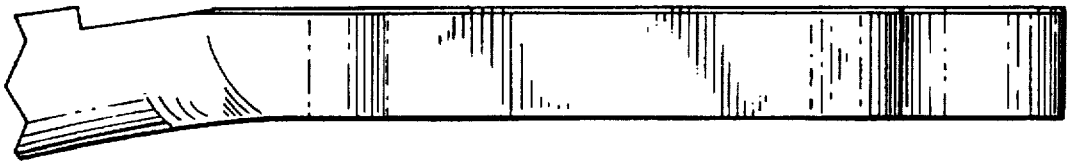

FIG. 3

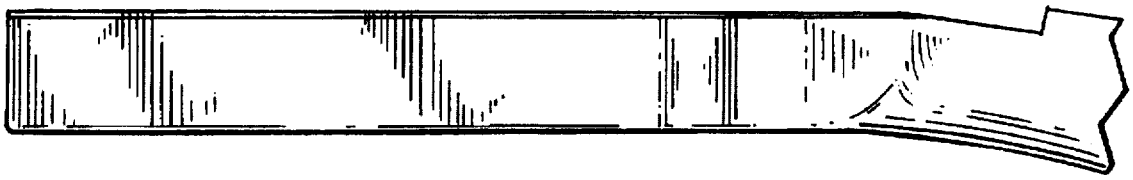

FIG. 4

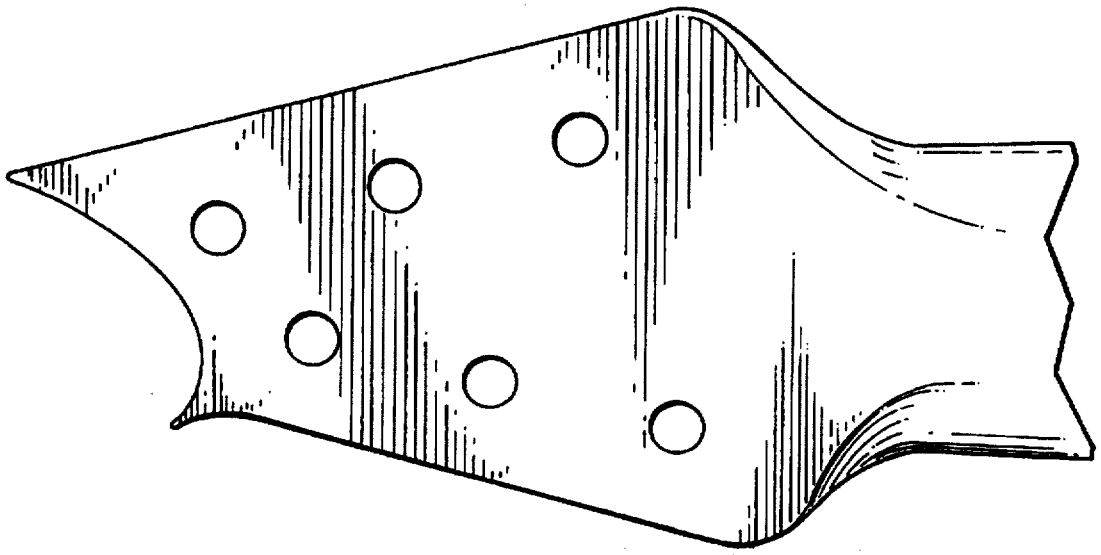

FIG. 5

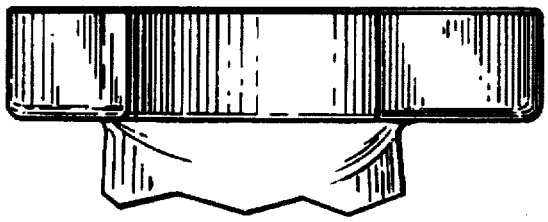

FIG. 6