US00D846316S

(12) **United States Design Patent** (10) **Patent No.: US D846,316 S**
Mandon et al. (45) **Date of Patent: ** Apr. 23, 2019**

(54) **CREDENZA**

(71) Applicant: **Apple Inc.**, Cupertino, CA (US)

(72) Inventors: **Kully Kraig Mandon**, San Francisco, CA (US); **Christopher M. Green**, Woodside, CA (US); **Jonathan P. Siegel**, San Francisco, CA (US); **Jody Akana**, San Francisco, CA (US); **Bartley K. Andre**, Palo Alto, CA (US); **Shota Aoyagi**, San Francisco, CA (US); **Anthony Michael Ashcroft**, San Francisco, CA (US); **Jeremy Bataillou**, San Francisco, CA (US); **Daniel J. Coster**, San Francisco, CA (US); **Daniele De Iuliis**, San Francisco, CA (US); **M. Evans Hankey**, San Francisco, CA (US); **Julian Hoenig**, San Francisco, CA (US); **Richard P. Howarth**, San Francisco, CA (US); **Jonathan P. Ive**, San Francisco, CA (US); **Duncan Robert Kerr**, San Francisco, CA (US); **Matthew Dean Rohrbach**, San Francisco, CA (US); **Peter Russell-Clarke**, San Francisco, CA (US); **Benjamin Andrew Shaffer**, San Jose, CA (US); **Mikael Silvanto**, San Francisco, CA (US); **Christopher J. Stringer**, Woodside, CA (US); **Eugene Antony Whang**, San Francisco, CA (US); **Rico Zörkendörfer**, San Francisco, CA (US)

(73) Assignee: **Apple Inc.**, Cupertino, CA (US)

(**) Term: **15 Years**

(21) Appl. No.: **29/590,454**

(22) Filed: **Jan. 10, 2017**

Related U.S. Application Data

(63) Continuation of application No. 29/522,911, filed on Apr. 3, 2015, now Pat. No. Des. 776,471.

(51) **LOC (11) Cl.** **06-04**

(52) **U.S. Cl.**
USPC **D6/661**

(58) **Field of Classification Search**
USPC D6/657, 660–662, 672, 685, 686, 694
(Continued)

(56) **References Cited**

U.S. PATENT DOCUMENTS

D197,321 S * 1/1964 Jones D6/661
3,289,616 A 12/1966 Donihi
(Continued)

FOREIGN PATENT DOCUMENTS

JP 1488695 S 1/2014
JP 1537517 S 11/2015
(Continued)

OTHER PUBLICATIONS

Neil Hughes, "Apple retail stores 'bulging at the seams' at 8400 average square feet," Appleinsider.com, dated May 8, 2012, accessed at <http:f/appleinsider.com/articles/12/05/08/apple_retail_stores_bulging_at_the_seams_at_8400_average_square_feet>, accessed on Oct. 20, 2014, 2 pages.
(Continued)

Primary Examiner — Mary Ann Calabrese
(74) *Attorney, Agent, or Firm* — Sterne, Kessler, Goldstein & Fox P.L.L.C.

(57) **CLAIM**

The ornamental design for a credenza, as shown and described.

DESCRIPTION

FIG. **1** is a top front perspective view of a credenza showing the claimed design;
FIG. **2** is a top rear perspective view thereof;
FIG. **3** is a front view thereof;
(Continued)

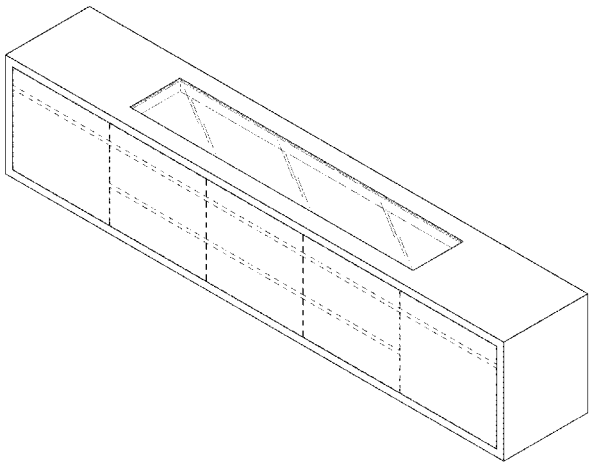

FIG. **4** is a rear view thereof;
FIG. **5** is a left side view thereof;
FIG. **6** is a right side view thereof;
FIG. **7** is a top view thereof; and,
FIG. **8** is a bottom view thereof.
The broken lines in the figures show portions of the credenza that form no part of the claimed design.

1 Claim, 5 Drawing Sheets

(58) **Field of Classification Search**
CPC A47B 47/00; A47B 53/00; A47B 55/00; A47B 87/00; A47B 87/005; A47F 3/00; A47F 3/005; A47F 3/007; A47F 3/0439
See application file for complete search history.

(56) **References Cited**

U.S. PATENT DOCUMENTS

D245,135	S		7/1977	Saltz et al.
D267,532	S	*	1/1983	Platner D6/671.1
D456,643	S		5/2002	Hamer
D502,617	S		3/2005	Chang
D522,274	S		6/2006	Coval
D523,261	S	*	6/2006	Ferrer Beltran D6/661
D591,079	S		4/2009	Singler et al.
D591,979	S		5/2009	Singler et al.
7,926,430	B2		4/2011	Bakker et al.
D657,978	S		4/2012	Hamm et al.
D659,433	S		5/2012	Starck
D678,696	S		3/2013	Hamm et al.
D679,521	S		4/2013	Hamm et al.
D688,494	S		8/2013	Hamm et al.
D690,142	S	*	9/2013	Arko D6/681
D693,156	S		11/2013	Hamm et al.
D713,658	S		9/2014	Tio et al.
D725,947	S		4/2015	Tio et al.
D728,281	S		5/2015	Heirakuji et al.
D728,975	S	*	5/2015	Park D6/657
D753,419	S		4/2016	Heirakuji et al.
D766,630	S		9/2016	Akana et al.
D766,631	S		9/2016	Akana et al.
D766,632	S		9/2016	Akana et al.
D766,633	S		9/2016	Akana et al.
D767,310	S		9/2016	Akana et al.
D769,021	S	*	10/2016	Green D6/560
D769,654	S		10/2016	Akana et al.
D773,868	S		12/2016	Schwalbach et al.
D776,471	S	*	1/2017	Mandon D6/691.1
D815,464	S	*	4/2018	Caillouet D6/657
D829,024	S	*	9/2018	Mejia A47B 87/005 D6/661
2010/0242808	A1		9/2010	Negoro et al.
2014/0265754	A1	*	9/2014	Patterson A47B 87/005 312/111
2015/0320203	A1		11/2015	Mandon et al.
2016/0064995	A1		3/2016	Schwalbach et al.

FOREIGN PATENT DOCUMENTS

KR	30-0703066	7/2013
WO	WO DM/070932	4/2009

OTHER PUBLICATIONS

Valentina Palladino, "Apple Store Receives Trademark for 'Distinctive Design and Layout,'" Wired.com, dated Jan. 30, 2013, accessed at <htlp://www.wired.com/2013/01/apple-store-trademark/>, accessed on Oct. 10, 2014, 2 pages.
Miro Zagnoli, "Paesaggio domestico," INTERNI, Apr. 1997, p. 162, Issue 469.
Japanese Patent Office Document No. HA24006766, Dated by JPO Sep. 1, 2012, p. 167, JP.
DINOS, Japanese Patent Office Document No. HJ21062299, Dated by JPO Mar. 25, 2016, JP.

* cited by examiner

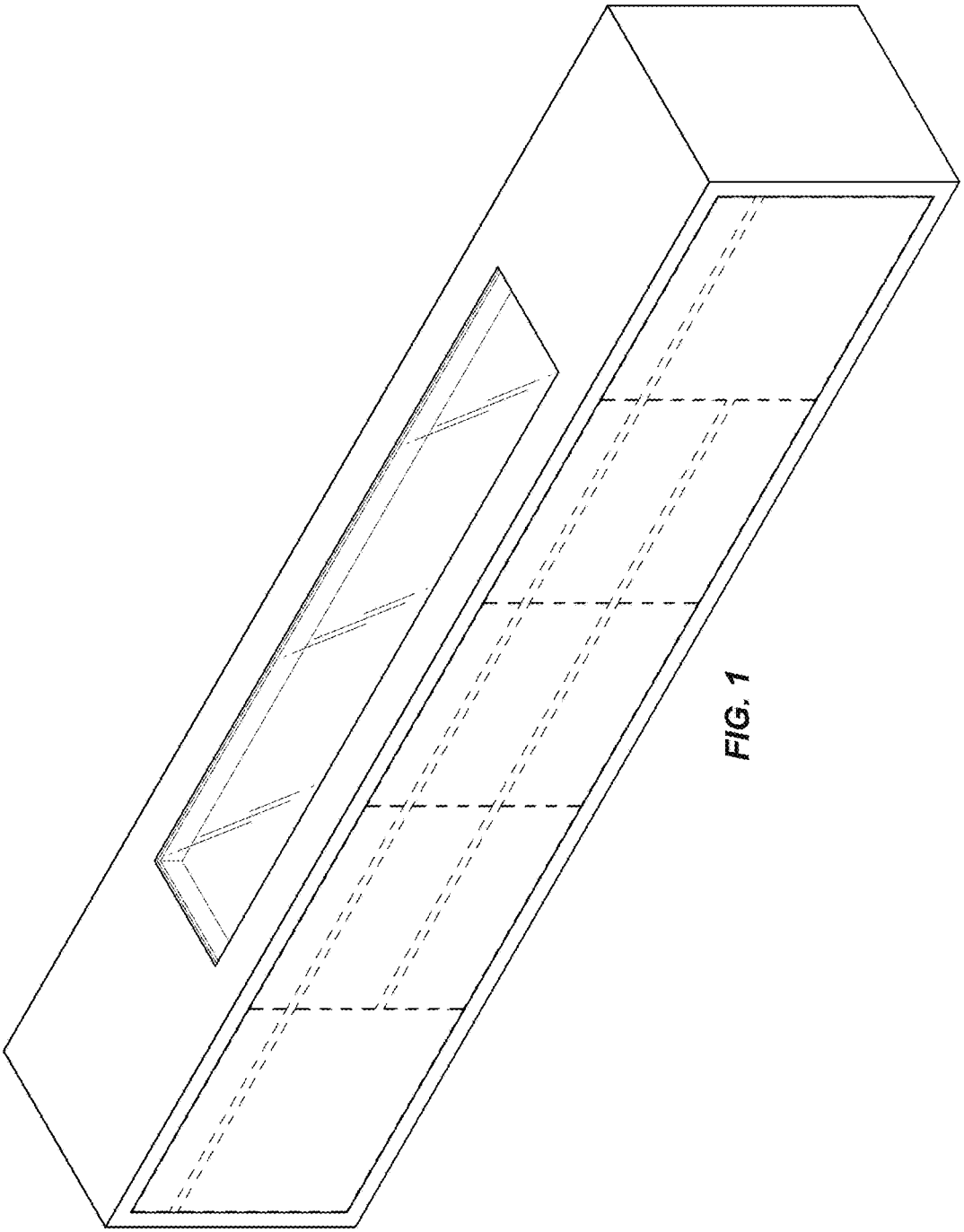

FIG. 1

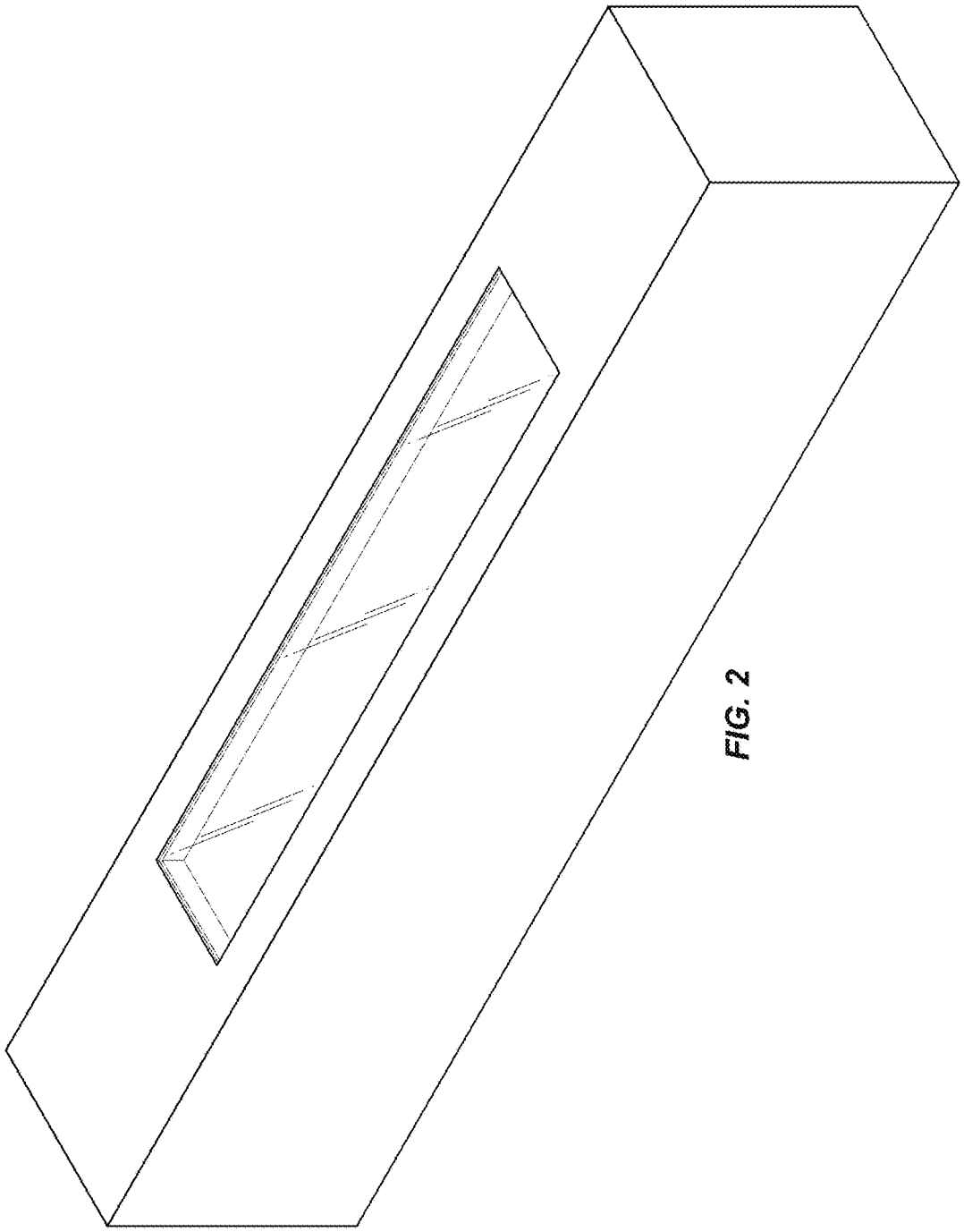

FIG. 2

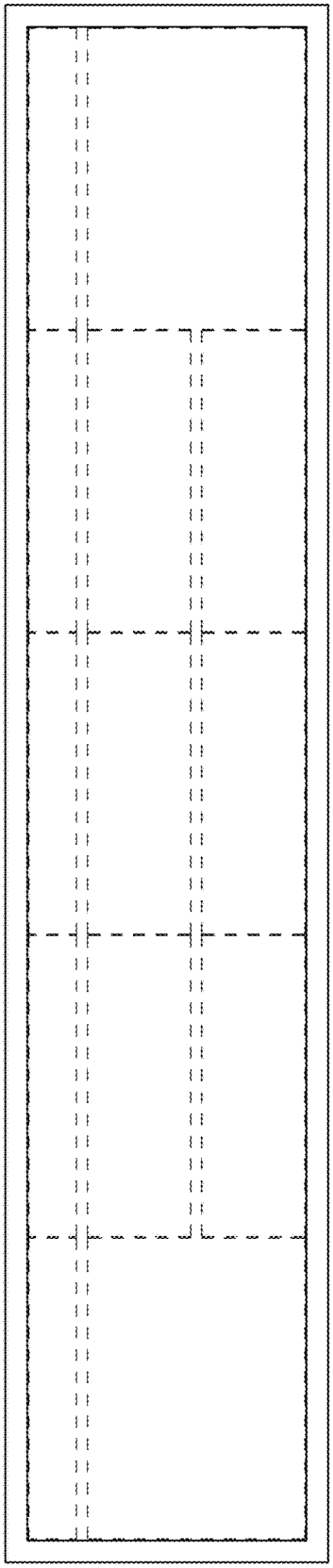

FIG. 3

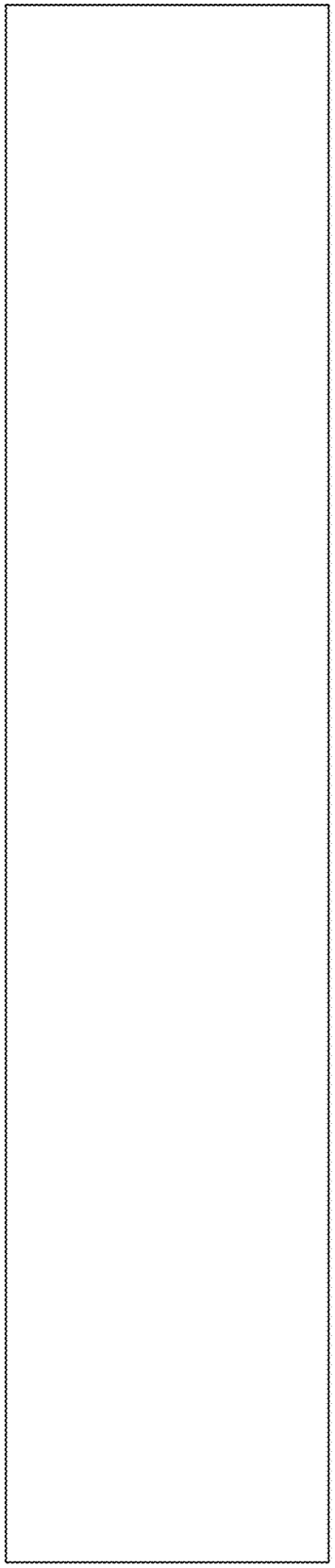

FIG. 4

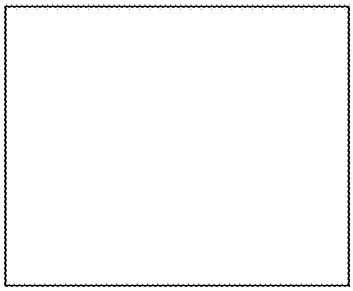

FIG. 6

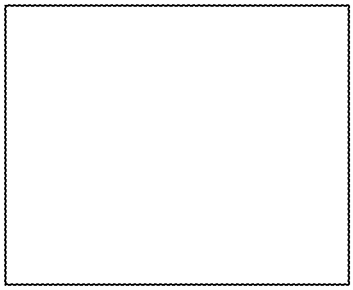

FIG. 5

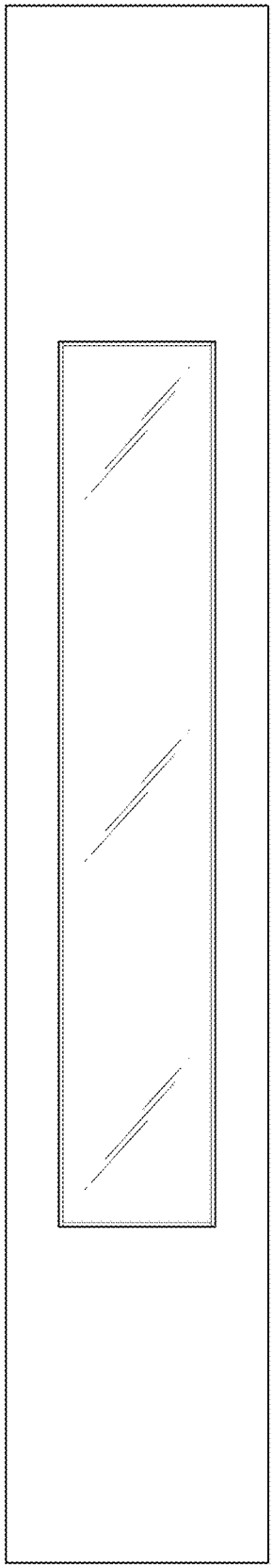

FIG. 7

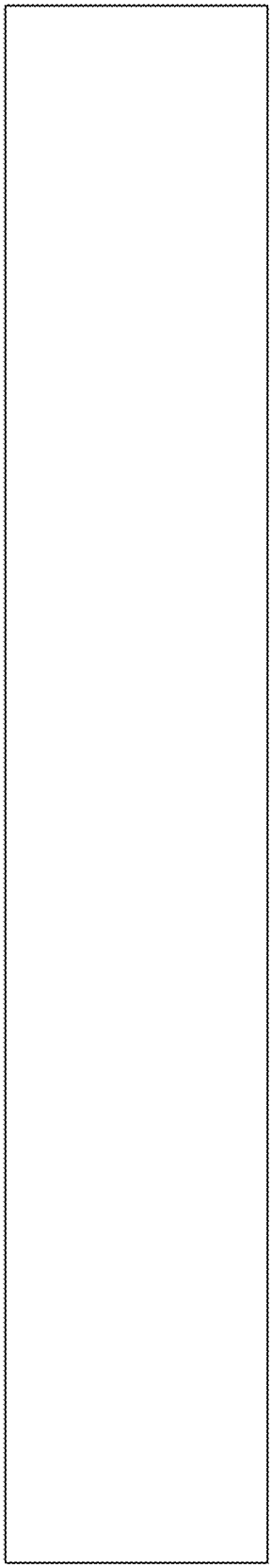

FIG. 8