US00D675215S

(12) **United States Design Patent**
Akana et al.

(10) **Patent No.: US D675,215 S**
(45) **Date of Patent: ** Jan. 29, 2013**

(54) **USB DEVICE**

(75) Inventors: **Jody Akana**, San Francisco, CA (US); **Bartley K. Andre**, Menlo Park, CA (US); **Jeremy Bataillou**, San Francisco, CA (US); **Daniel J. Coster**, San Francisco, CA (US); **Daniele De Iuliis**, San Francisco, CA (US); **Evans Hankey**, San Francisco, CA (US); **Richard P. Howarth**, San Francisco, CA (US); **Jonathan P. Ive**, San Francisco, CA (US); **Duncan Robert Kerr**, San Francisco, CA (US); **Shin Nishibori**, Portola Valley, CA (US); **Matthew Dean Rohrbach**, San Francisco, CA (US); **Peter Russell-Clarke**, San Francisco, CA (US); **Christopher J. Stringer**, Woodside, CA (US); **Eugene Antony Whang**, San Francisco, CA (US); **Rico Zorkendorfer**, San Francisco, CA (US)

(73) Assignee: **Apple Inc.**, Cupertino, CA (US)

(**) Term: **14 Years**

(21) Appl. No.: **29/416,442**

(22) Filed: **Mar. 22, 2012**

Related U.S. Application Data

(63) Continuation of application No. 29/377,060, filed on Oct. 15, 2010, now Pat. No. Des. 658,665.

(51) **LOC (9) Cl.** **14-02**
(52) **U.S. Cl.** **D14/480.1**
(58) **Field of Classification Search** D14/411, D14/433, 435, 435.1, 436–438, 455, 480.1–480.7, D14/484.1, 137, 155, 203.1–203.8, 218, 240; D13/133, 146–147, 154, 168; 710/300, 301; 439/131, 135–147; 361/679.31, 679.33, 361/679.4, 752; 711/100, 115; D19/9; D20/10, D20/19, 27, 40; D26/37; D30/155; 40/299.01, 40/625, 642.01
See application file for complete search history.

(56) **References Cited**

U.S. PATENT DOCUMENTS

D99,521	S	*	5/1936	Reilly	D26/37
D306,042	S	*	2/1990	Evenson	D20/10
D308,078	S	*	5/1990	Dallal et al.	D20/10
D322,963	S	*	1/1992	Kittirutsunetorn	D14/242
D372,707	S		8/1996	Grewe et al.	
D397,465	S	*	8/1998	Youri	D26/38
D447,481	S		9/2001	Wallace et al.	
D452,245	S	*	12/2001	Wallace et al.	D14/436
D452,246	S		12/2001	Wallace et al.	
D463,393	S	*	9/2002	Kataoka	D14/167
6,480,390	B2		11/2002	Matsumiya et al.	
6,744,634	B2		6/2004	Yen	
D513,005	S		12/2005	Kobayakawa	
D518,483	S		4/2006	Yu et al.	

(Continued)

FOREIGN PATENT DOCUMENTS

KR 3004727180000 12/2007

(Continued)

Primary Examiner — Karen E Kearney
(74) *Attorney, Agent, or Firm* — Sterne, Kessler, Goldstein & Fox, P.L.L.C.

(57) **CLAIM**

The ornamental design for a USB device, as shown and described.

DESCRIPTION

FIG. **1** is a front perspective view of a USB device showing our new design;
FIG. **2** is a rear perspective view thereof;
FIG. **3** is another front perspective view thereof;
FIG. **4** is another rear perspective view thereof;
FIG. **5** is a front view thereof;
FIG. **6** is a rear view thereof;
FIG. **7** is a left side view thereof;
FIG. **8** is a right side view thereof;
FIG. **9** is a top view thereof; and,
FIG. **10** is a bottom view thereof.

The broken lines in the Figures show portions of a USB device which form no part of the claimed design. The shade lines in the Figures show contour and not surface ornamentation.

1 Claim, 8 Drawing Sheets

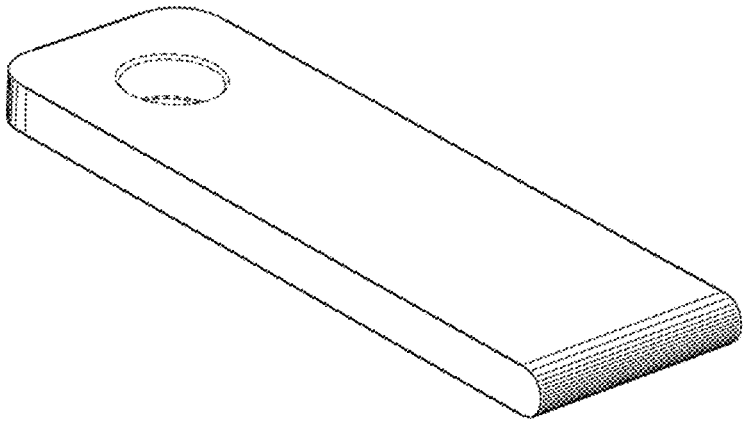

U.S. PATENT DOCUMENTS

D529,044	S		9/2006	Andre et al.	
D537,036	S	*	2/2007	Chen	D14/433
D539,814	S		4/2007	Andre et al.	
D558,226	S	*	12/2007	Honda	D14/496
D558,783	S		1/2008	Andre et al.	
D559,249	S	*	1/2008	Takei	D14/480.6
D559,903	S	*	1/2008	Schwab	D19/9
D559,904	S	*	1/2008	Schwab	D19/9
D605,635	S	*	12/2009	Edahiro et al.	D14/218
D608,303	S		1/2010	Klausing et al.	
D620,456	S		7/2010	Akana et al.	
D627,069	S	*	11/2010	Mehlsen et al.	D24/174
D641,753	S	*	7/2011	Obata	D14/356
D656,141	S	*	3/2012	Schlossstein	D14/480.1
D658,665	S	*	5/2012	Akana et al.	D14/480.1
D660,857	S	*	5/2012	Emami	D14/480.3
D666,201	S	*	8/2012	Gallagher et al.	D14/436
2008/0094807	A1	*	4/2008	Hiew et al.	361/737
2010/0046156	A1		2/2010	Wei	
2012/0190218	A1	*	7/2012	Patel et al.	439/59

FOREIGN PATENT DOCUMENTS

KR	3004946390000	6/2008

* cited by examiner

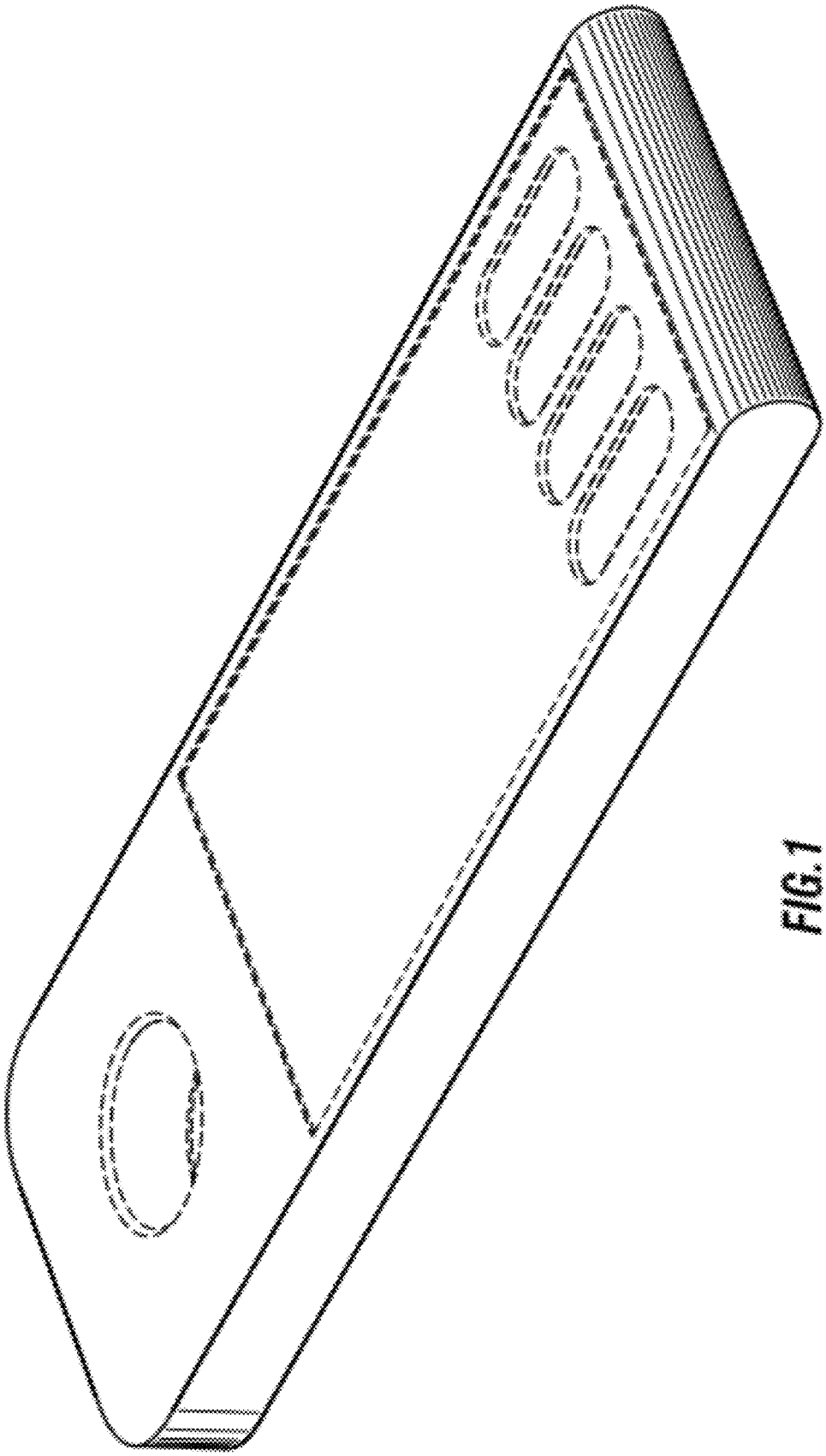

FIG.1

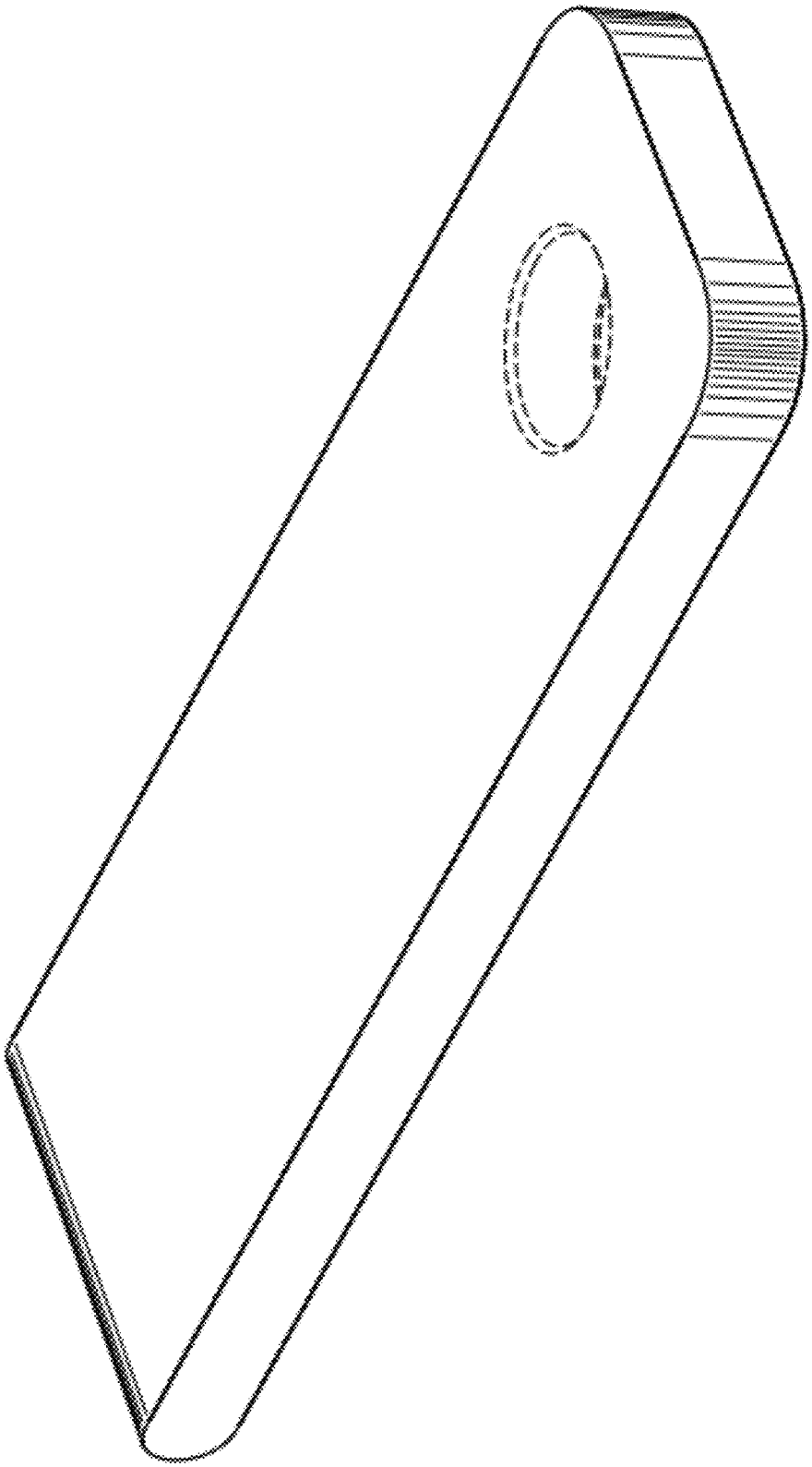

FIG.2

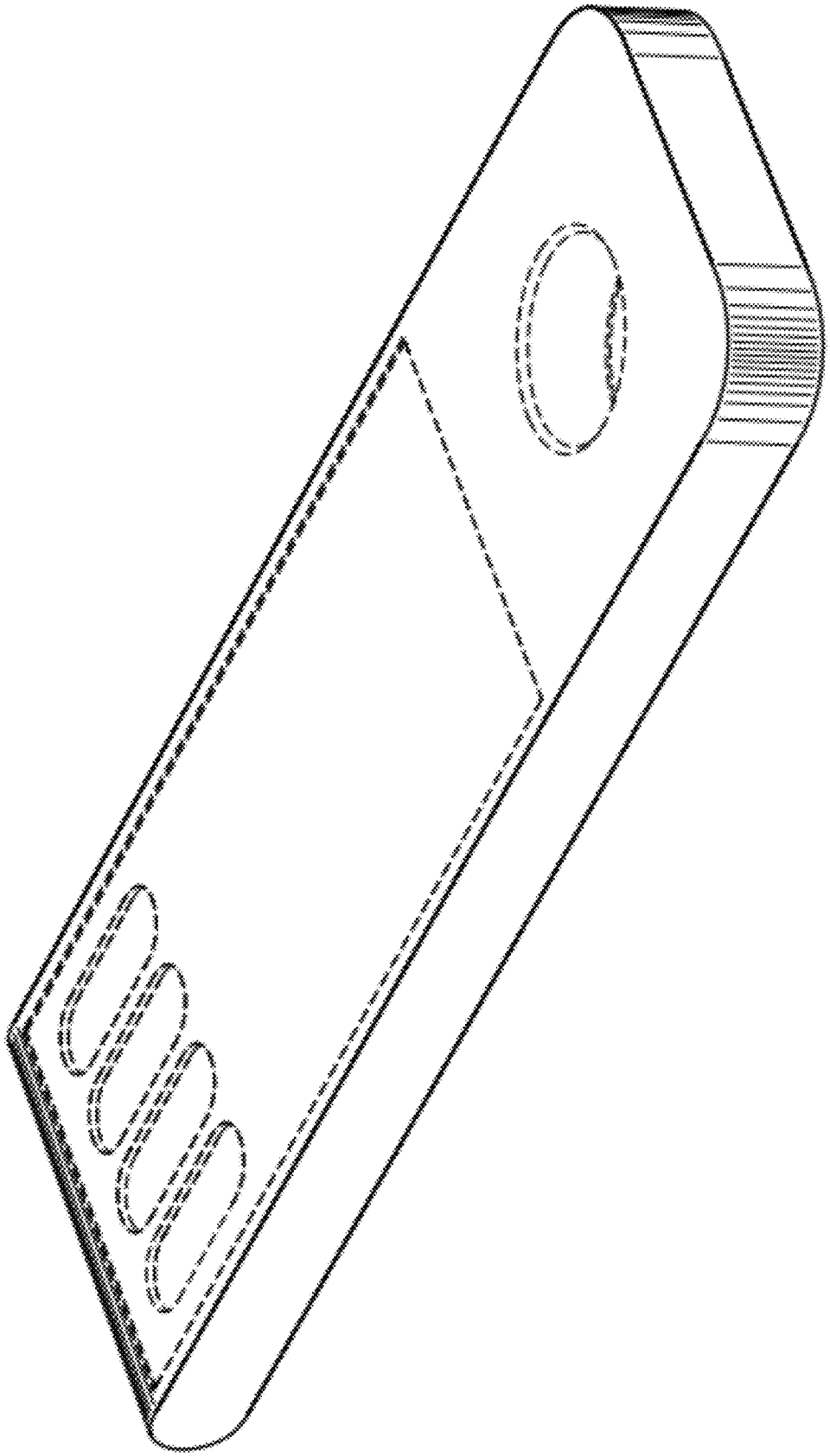

FIG.3

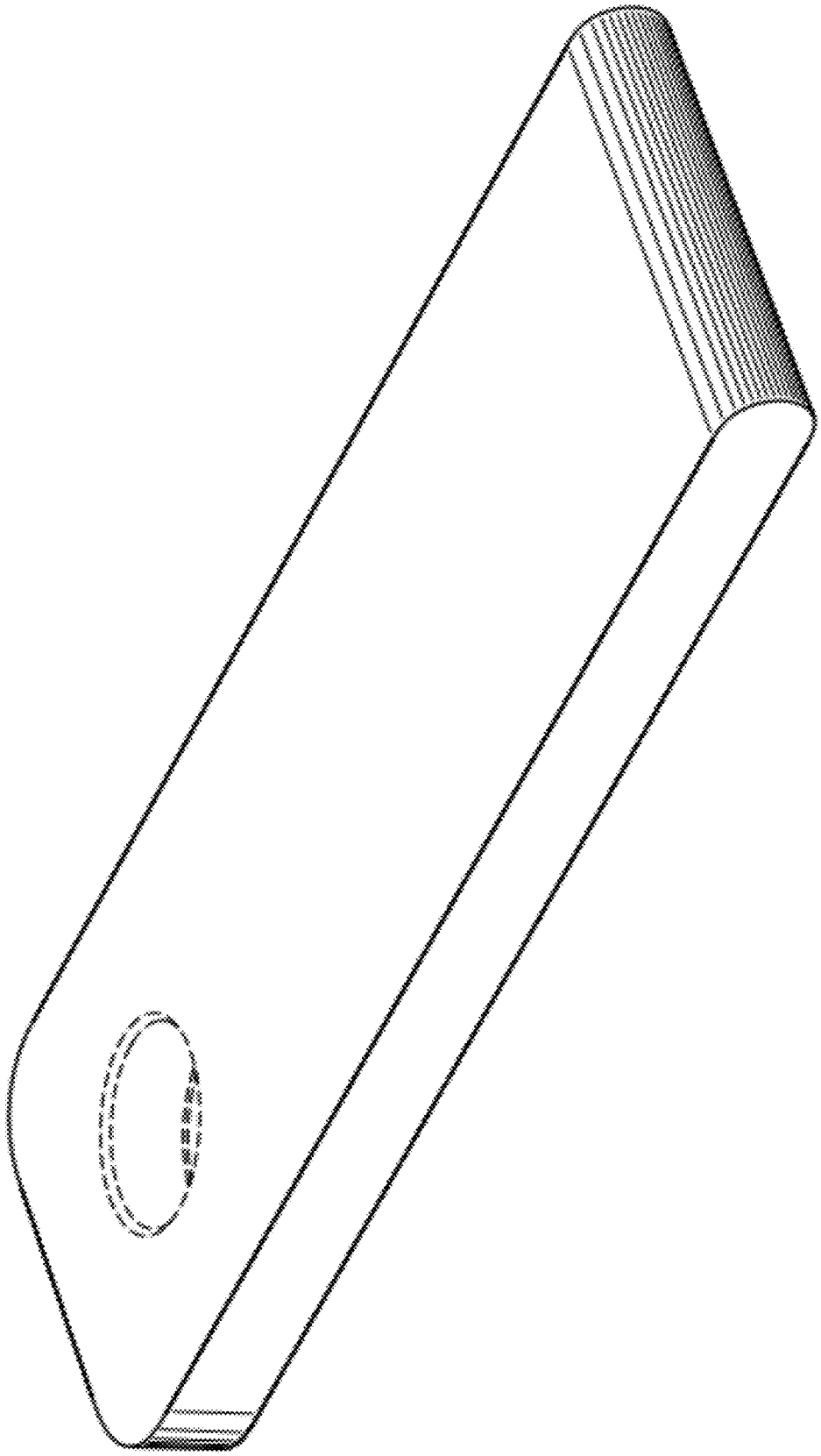

FIG.4

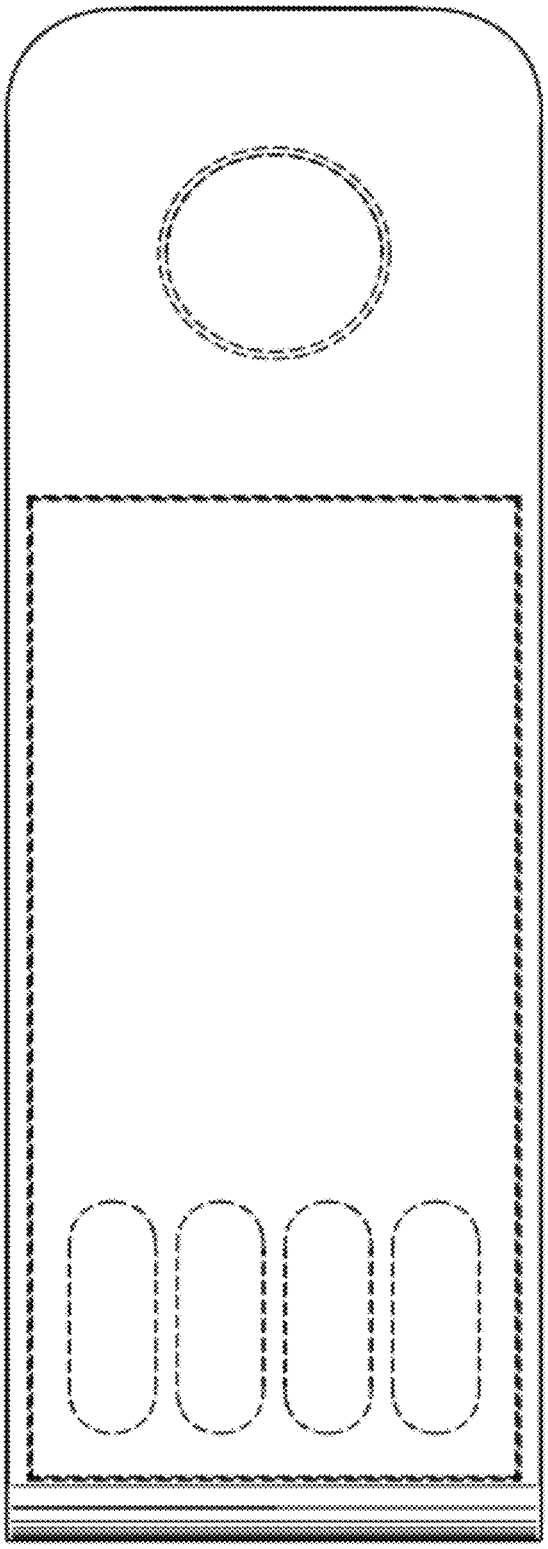

FIG.5

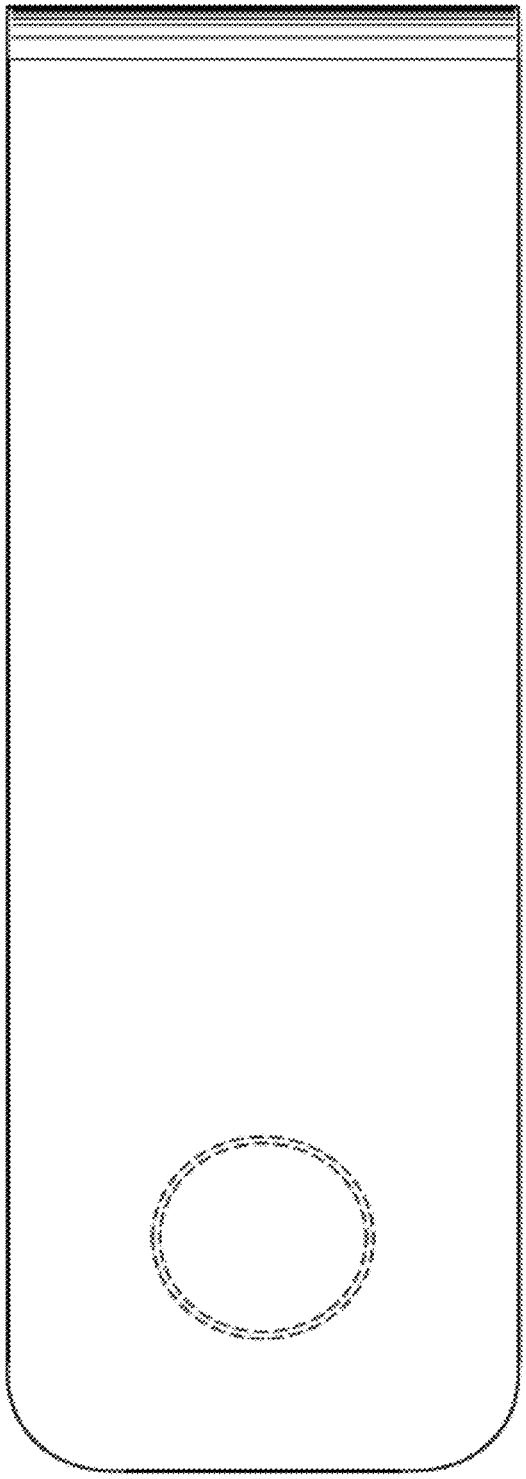

FIG.6

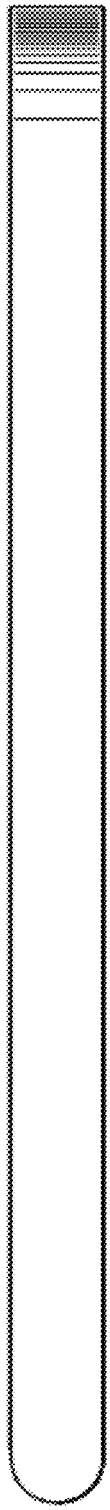

FIG.7

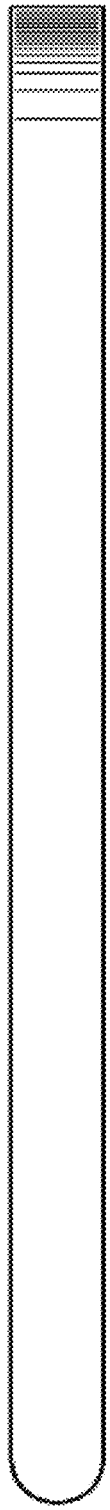

FIG.8

FIG.9

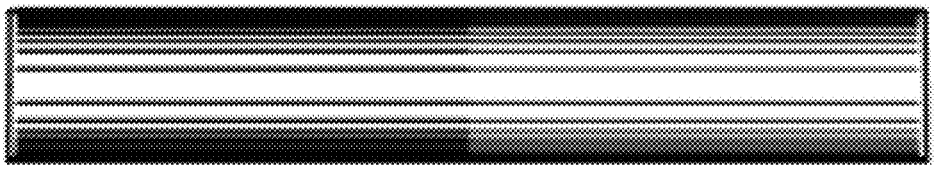

FIG.10