US00D888407S

(12) United States Design Patent

Dash

(10) Patent No.: US D888,407 S
(45) Date of Patent: ** Jun. 30, 2020

(54) **CANE**

(71) Applicant: **John Dash**, Rancho Mirage, CA (US)

(72) Inventor: **John Dash**, Rancho Mirage, CA (US)

(**) Term: **15 Years**

(21) Appl. No.: **29/697,784**

(22) Filed: **Jul. 11, 2019**

(51) **LOC (12) Cl.** **03-03**

(52) **U.S. Cl.**
USPC **D3/7**

(58) **Field of Classification Search**
USPC D3/5, 6, 7, 8, 9, 10, 12; D21/304, 568
CPC A45B 1/00; A45B 1/04; A45B 7/00; A45B 7/005; A45B 9/00; A45B 9/02; A45B 21/00; A45B 25/00; A45B 2200/05; A45B 2200/1081
See application file for complete search history.

(56) **References Cited**

U.S. PATENT DOCUMENTS

1,701,866 A * 2/1929 Soriente A45B 9/00 135/65
D113,865 S * 3/1939 Fletcher et al. D3/7
D162,590 S * 3/1951 Stanley et al. D3/7
3,208,461 A * 9/1965 Irwin A61H 3/02 135/69
D290,784 S * 7/1987 Moshiri D3/7
5,226,718 A * 7/1993 Lin A45B 3/04 362/102
D373,717 S * 9/1996 Ferverda D8/330
D397,170 S * 8/1998 Choi D21/568
5,845,664 A * 12/1998 Ryder A45B 3/04 135/65
5,871,025 A * 2/1999 Richter A45B 3/00 135/65
D427,763 S * 7/2000 Kikuchi D3/7
D555,892 S * 11/2007 Carroll D3/6
D624,303 S * 9/2010 Jones D3/7
D625,910 S * 10/2010 Whittaker D3/7
D693,565 S * 11/2013 Chan D3/7
D695,956 S * 12/2013 Mayer D27/186
D722,762 S * 2/2015 Kroeker D3/12
D742,111 S * 11/2015 Diamond D3/7
(Continued)

FOREIGN PATENT DOCUMENTS

ES 2546688 A1 9/2015
JP 3023232 U 4/1996
JP 3029623 U 10/1996

OTHER PUBLICATIONS

Walking Cane Handle, by Grenda, Thingiverse.com, https://www.thingiverse.com/thing:2951701.*
(Continued)

Primary Examiner — Eric L Goodman
Assistant Examiner — Steven J Czyz
(74) *Attorney, Agent, or Firm* — Jeffrey G. Sheldon; Katherine B. Sales; Cislo & Thomas LLP

(57) **CLAIM**

The ornamental design for a cane, as shown and described.

DESCRIPTION

FIG. **1** is a perspective view of a cane according to my new design;
FIG. **2** is a front elevation view of the cane shown in FIG. **1**, wherein the rear elevation view is the same;
FIG. **3** is a left side elevation view of the cane shown in FIG. **1**, wherein the right side elevation view is the same;
FIG. **4** is a top plan view of the cane shown in FIG. **1**; and,
FIG. **5** is a bottom plan view of the cane shown in FIG. **1**.
The broken lines depict portions of the article that form no part of the claimed design.

1 Claim, 2 Drawing Sheets

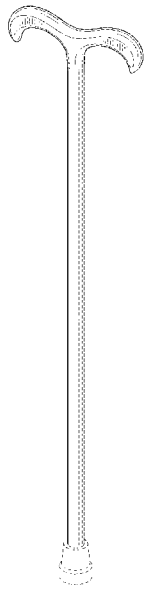

(56) **References Cited**

U.S. PATENT DOCUMENTS

10,004,306	B1 *	6/2018	Randel, Jr.	A45B 3/14
10,188,183	B1 *	1/2019	Swerdlow	A45B 9/04
10,405,620	B1 *	9/2019	Quinn	A45B 3/02
2004/0020524	A1 *	2/2004	McConnell	A45F 5/00 135/66
2004/0144410	A1 *	7/2004	Cheng	A45B 1/00 135/65
2006/0090783	A1 *	5/2006	King-Fai	A45B 1/00 135/67
2006/0254633	A1 *	11/2006	Willis	A45B 9/00 135/74
2008/0041432	A1 *	2/2008	Willis	A45B 3/12 135/74
2010/0006128	A1 *	1/2010	Lamoureux	A45B 7/00 135/65
2010/0051077	A1 *	3/2010	McGann	A45B 9/02 135/76
2010/0200032	A1 *	8/2010	Lee	A45B 9/00 135/74
2011/0271990	A1 *	11/2011	Diamond	A45B 3/02 135/65
2011/0271992	A1 *	11/2011	Senatro	A45B 9/00 135/75
2012/0000497	A1 *	1/2012	Kim	A45B 9/00 135/75
2012/0160286	A1 *	6/2012	Ban	A45B 3/00 135/75
2015/0374081	A1 *	12/2015	Wang	A45B 9/00 135/75
2016/0192746	A1 *	7/2016	Gordin	A61H 3/04 135/76
2017/0303648	A1 *	10/2017	Ober	A45B 9/04
2019/0343252	A1 *	11/2019	Lee	A45B 9/02

OTHER PUBLICATIONS

Ergonomic Aluminum Soft Touch Derby Walking Cane—Black, Derby Cane, Walkingcanecompany.com, https://www.walkingcaneco.com/Ergonomic-Aluminum-Soft-Touch-Derby-Walking-Cane--Black_p_104.html.*

T Shape Handle Canes, walkingsticksandcane.com, https://walkingsticksandcane.com/collections/t-handle-canes.*

"Genuine Oak Wood Derby Walking Cane With Oak Shaft And Brass Embossed Collar." SKU: 80901. Fashionablecanes.com. https://www.fashionablecanes.com/80901.html?gclid=EAIaIQobChMI67nCqO-q4wIVBNNkCh1--AarEAQYASABEgIbVPD_BwE.

"Horn T Handle Walking Cane w/ Black Beechwood Shaft and Brass Collar." SKU: 223940. Fashionablecanes.com. https://www.fashionablecanes.com/223940.html.

"T-handle walking cane." Lumberjocks.com. https://www.lumberjocks.com/projects/29290.

"T Shape Handle Canes." Walkingsticksandcanes.com. https://walkingsticksandcane.com/collections/t-handle-canes.

* cited by examiner

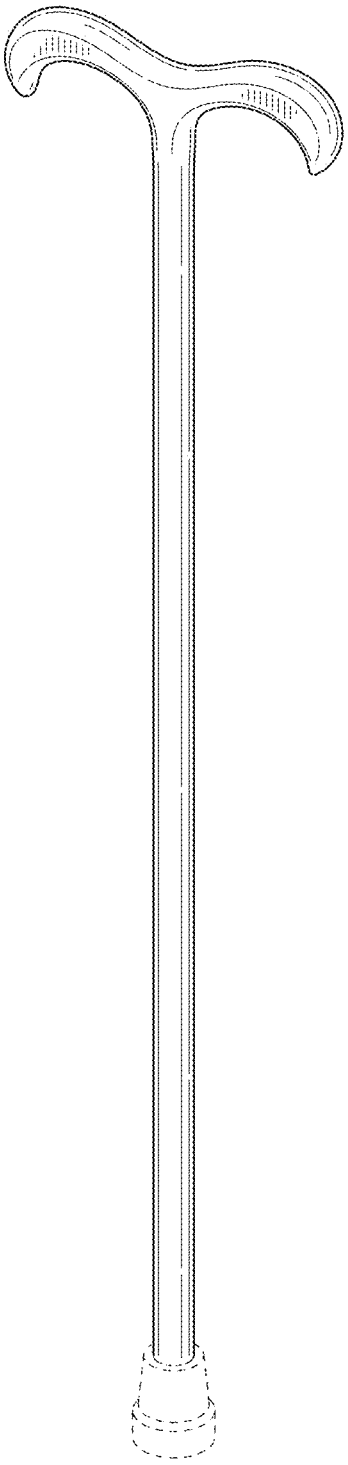

FIG. 1

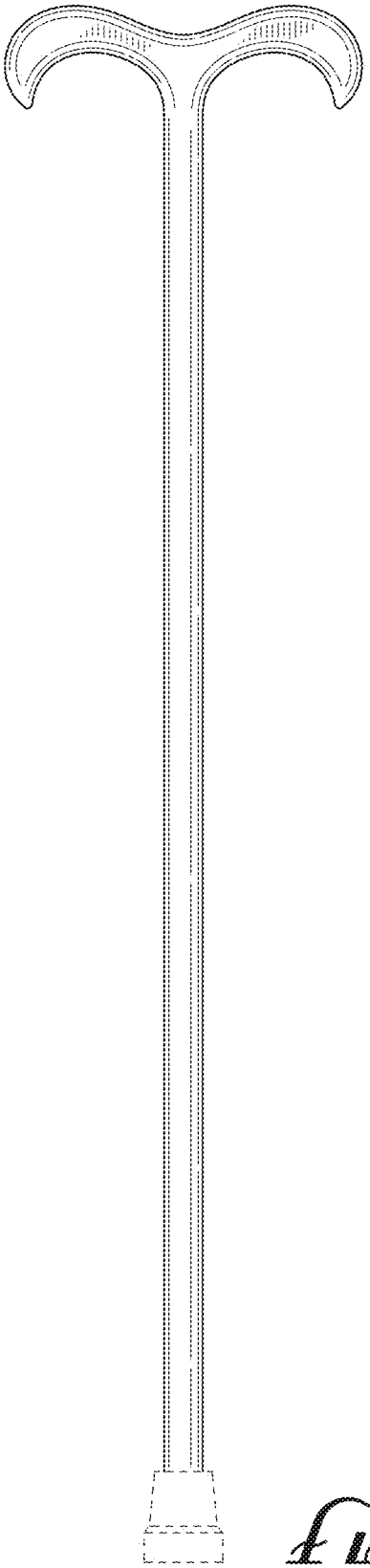

FIG. 2

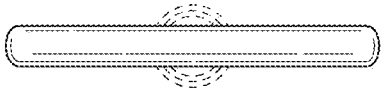

FIG. 4

FIG. 5

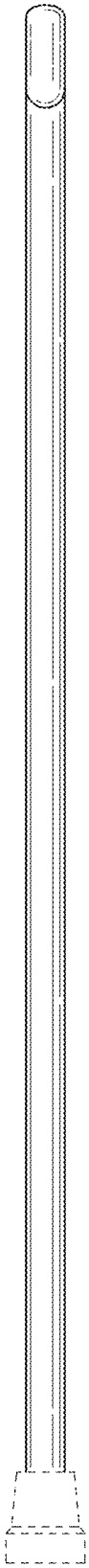

FIG. 3