US009097298B2

(12) **United States Patent**
Schoolcraft

(10) **Patent No.: US 9,097,298 B2**
(45) **Date of Patent: Aug. 4, 2015**

(54) **ELECTROMAGNETICALLY-ACTUATED DIRECTION-SENSING ROLLER CLUTCH**

(71) Applicant: **Brian Schoolcraft**, Crawfordsville, IN (US)

(72) Inventor: **Brian Schoolcraft**, Crawfordsville, IN (US)

(73) Assignee: **Allison Transmission, Inc.**, Indianapolis, IN (US)

(*) Notice: Subject to any disclaimer, the term of this patent is extended or adjusted under 35 U.S.C. 154(b) by 146 days.

(21) Appl. No.: **13/774,840**

(22) Filed: **Feb. 22, 2013**

(65) **Prior Publication Data**

US 2013/0220759 A1 Aug. 29, 2013

Related U.S. Application Data

(60) Provisional application No. 61/602,255, filed on Feb. 23, 2012.

(51) **Int. Cl.**

F16D 41/08	(2006.01)
F16D 27/02	(2006.01)
F16H 37/08	(2006.01)

(52) **U.S. Cl.**

CPC ***F16D 41/086*** (2013.01); *F16D 27/02* (2013.01); *F16H 37/084* (2013.01)

(58) **Field of Classification Search**

CPC F16D 27/02; F16D 41/086
USPC 192/84.8
See application file for complete search history.

(56) **References Cited**

U.S. PATENT DOCUMENTS

2,410,818	A	11/1946	Grant, Jr.
2,554,221	A	5/1951	Stephenson et al.
2,583,843	A	1/1952	Herrick
2,596,654	A	5/1952	Clark et al.
2,718,292	A	9/1955	Meilander et al.
2,841,330	A	7/1958	Brewer et al.
3,324,744	A	6/1967	Roper

(Continued)

FOREIGN PATENT DOCUMENTS

EP	1519084	A2	9/2004
WO	9849455	A2	11/1998
WO	2010048029	A2	4/2010

OTHER PUBLICATIONS

International Search Report and Written Opinion received for PCT International Application No. PCT/US2013/027468, mailed May 9, 2013, 10 pages.

Primary Examiner — Rodney H Bonck
(74) *Attorney, Agent, or Firm* — Barnes & Thornburg LLP

(57) **ABSTRACT**

A roller clutch includes an outer race, an inner race, a first engagement member situated between the outer race and the inner race, a second engagement member situated between the outer race and the inner race, and an electromagnetic mover to be energized or de-energized. The first engagement member is configured to engage the outer race and the inner race to transmit torque between the outer race and the inner race in response to the electromagnetic mover being energized and the inner race applying negative torque to the second engagement member while the outer race applies positive torque to the second engagement member. The second engagement member is configured to engage the outer race and the inner race to transmit torque between the outer race and the inner race in response to the inner race applying positive torque to the second engagement member while the outer race applies negative torque to the second engagement member.

9 Claims, 6 Drawing Sheets

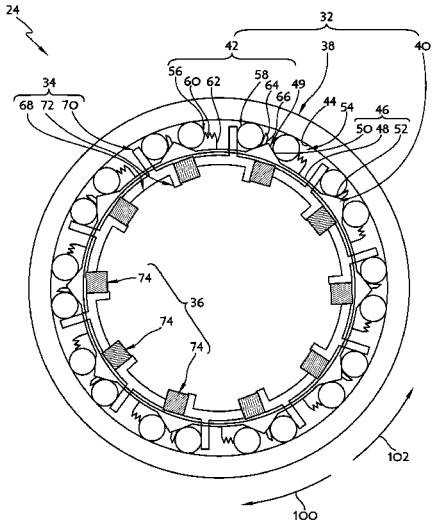

(56) **References Cited**

U.S. PATENT DOCUMENTS

3,432,016	A	3/1969	Vogt	
3,481,436	A	12/1969	Wilkowski	
3,631,741	A	1/1972	Kelbel	
4,114,478	A	9/1978	Clauss	
4,361,217	A	11/1982	Bieber et al.	
4,381,828	A	5/1983	Lunn et al.	
4,813,524	A	3/1989	Reik	
5,152,726	A	10/1992	Lederman et al.	
2,347,873	A	5/1994	Bloomfield	
5,355,981	A	10/1994	Itoh et al.	
5,407,024	A	4/1995	Watson et al.	
5,441,130	A	8/1995	Ha	
5,538,121	A	7/1996	Hering	
5,584,776	A	12/1996	Weilant et al.	
5,653,322	A	8/1997	Vasa	
5,662,198	A	9/1997	Kojima et al.	
5,704,867	A	1/1998	Bowen	
5,771,477	A	6/1998	Showalter et al.	
5,833,566	A	11/1998	Showalter	
5,884,526	A	3/1999	Fogelberg	
5,893,812	A	4/1999	Narai et al.	
5,918,715	A	7/1999	Ruth et al.	
5,992,592	A	11/1999	Showalter	
6,062,361	A	5/2000	Showalter	
6,149,540	A	11/2000	Johnson et al.	
6,149,543	A	11/2000	Breen	
6,155,395	A	12/2000	Braford	
6,251,045	B1	6/2001	Oliveira et al.	
6,460,671	B1	10/2002	Karambelas et al.	
6,569,051	B2 *	5/2003	Hirano et al.	192/44
6,588,559	B2	7/2003	Blair	
6,672,442	B2	1/2004	Kato et al.	
6,679,367	B2	1/2004	Baker et al.	
6,790,153	B2	9/2004	Goto	
6,834,750	B2	12/2004	Baker et al.	
6,846,257	B2	1/2005	Baker et al.	
7,052,430	B2	5/2006	Stevenson et al.	
7,189,182	B2	3/2007	Stevenson et al.	
7,204,337	B2	4/2007	Wildfellner	
7,219,569	B2	5/2007	Jastrzembowski et al.	
7,874,413	B2 *	1/2011	Saito et al.	192/44
8,152,673	B2	4/2012	Yanay	
8,298,112	B2	10/2012	Takada	
2002/0005325	A1	1/2002	Yamada	
2003/0051959	A1	3/2003	Blair	
2003/0226415	A1	12/2003	Baker et al.	
2004/0104096	A1	6/2004	Genise	
2010/0314212	A1 *	12/2010	Akiyoshi et al.	192/66.1

* cited by examiner

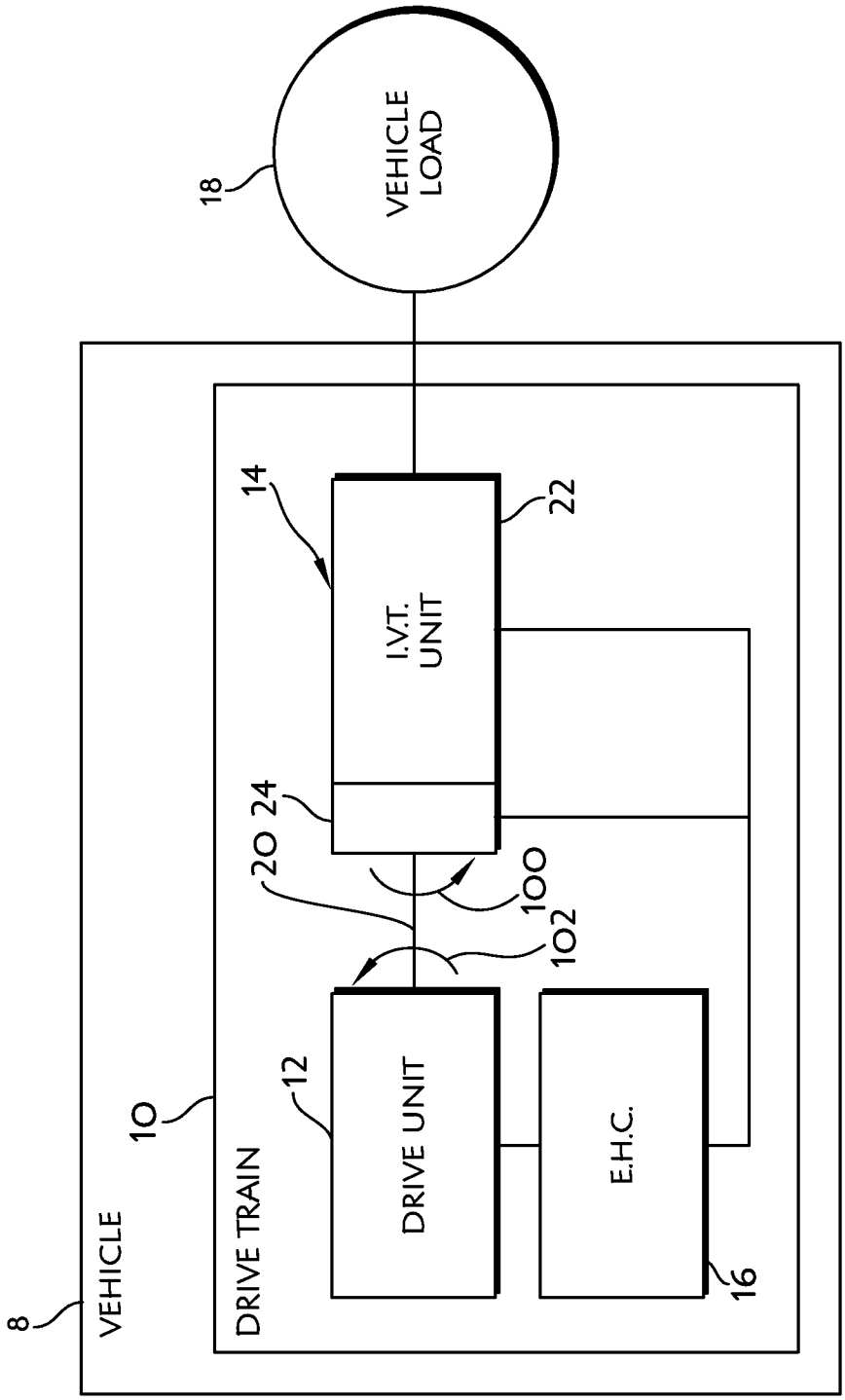
VEHICLE
8
10
DRIVE TRAIN
12
DRIVE UNIT
20
24
14
I.V.T.
UNIT
22
100
102
E.H.C.
16
18
VEHICLE
LOAD

FIG. 1

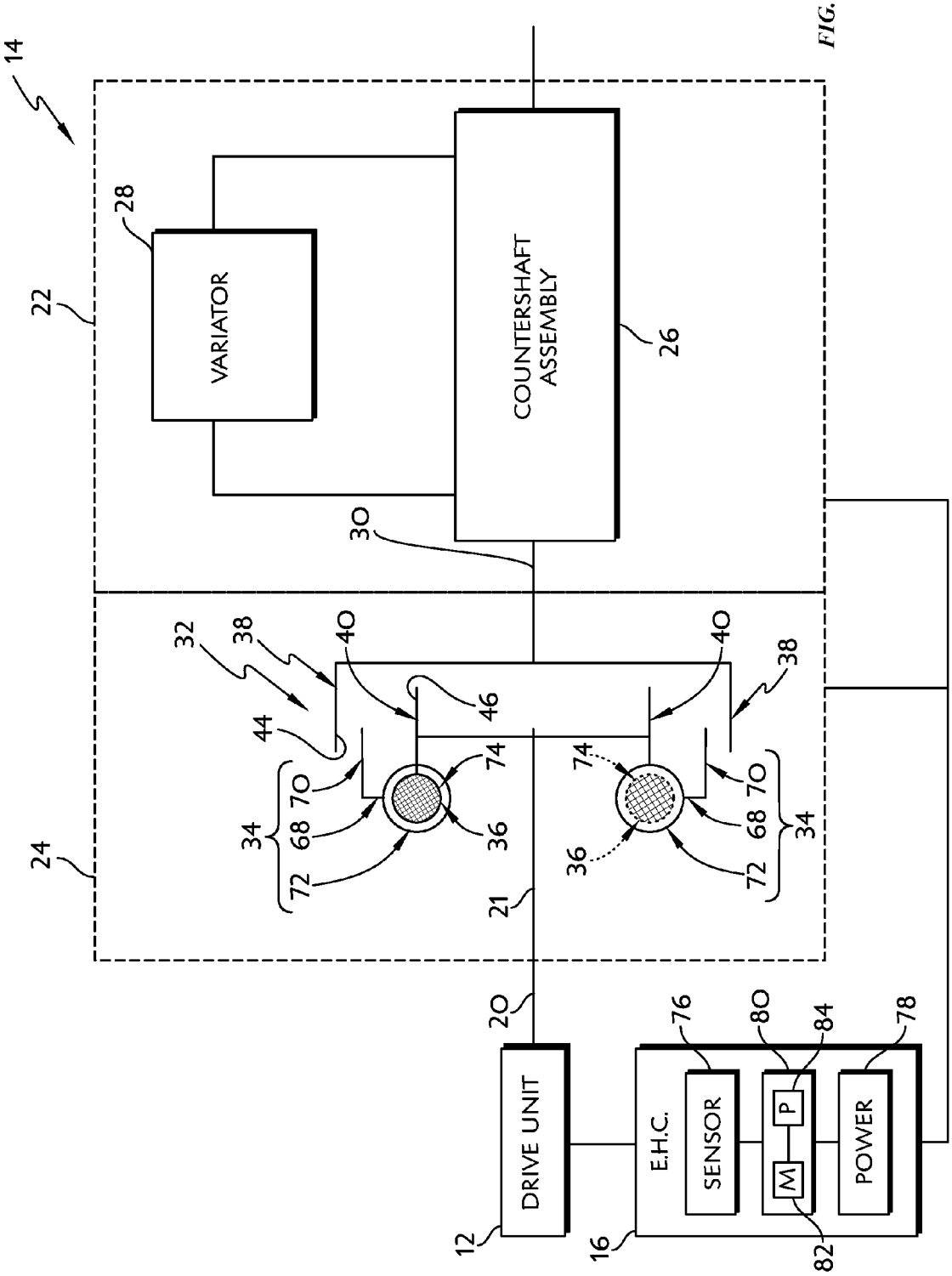
14
22
28
VARIATOR
COUNTERSHAFT ASSEMBLY
26
30
32
38
40
44
46
74
70
68
72
34
36
24
21
20
DRIVE UNIT
12
E.H.C.
16
76
SENSOR
80
P
M
82
84
POWER
78

FIG. 2

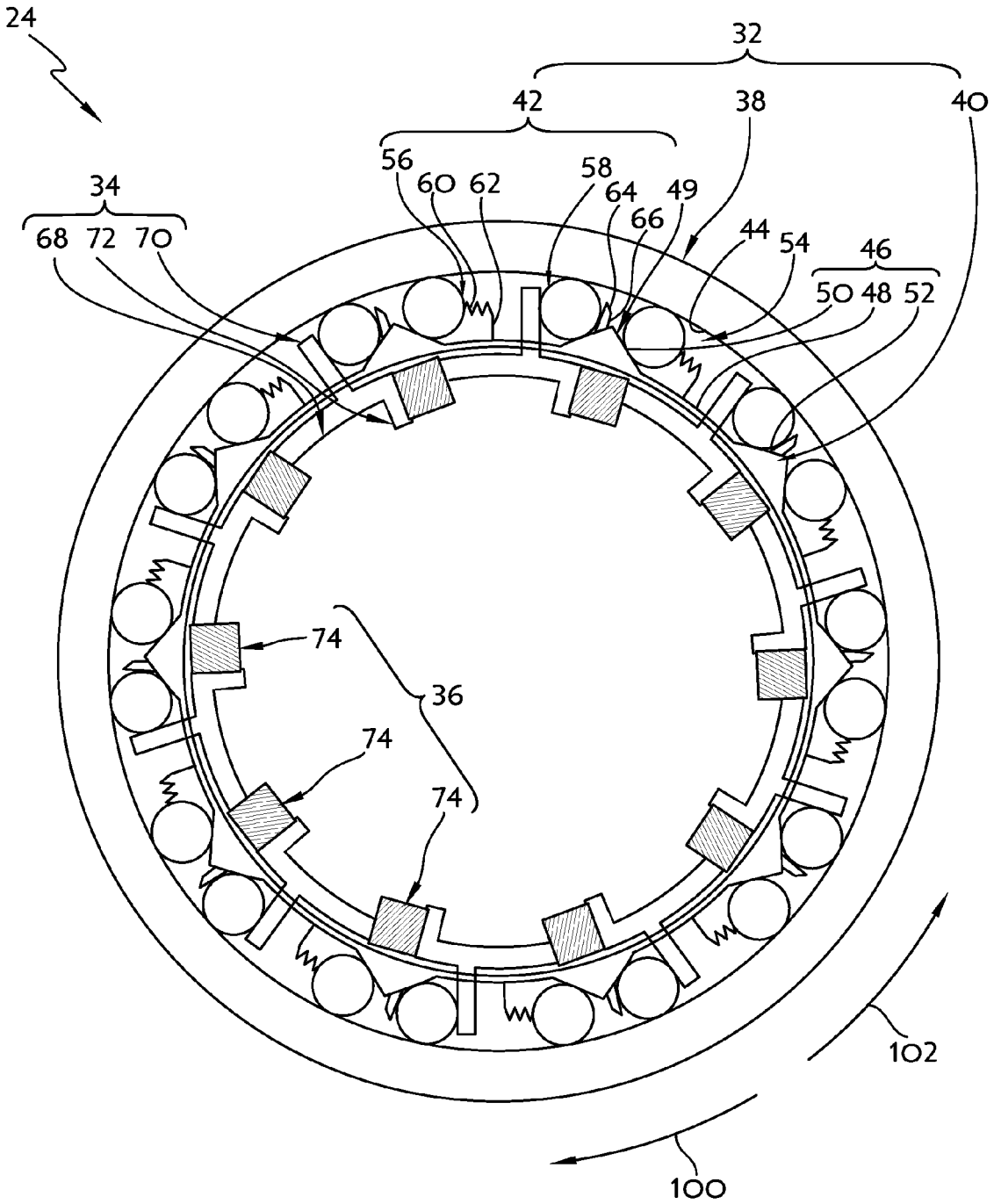
24
32
42
38
40
56
60
62
58
64
49
66
44
54
46
34
68
72
70
50
48
52
74
36
74
74
102
100

FIG. 3

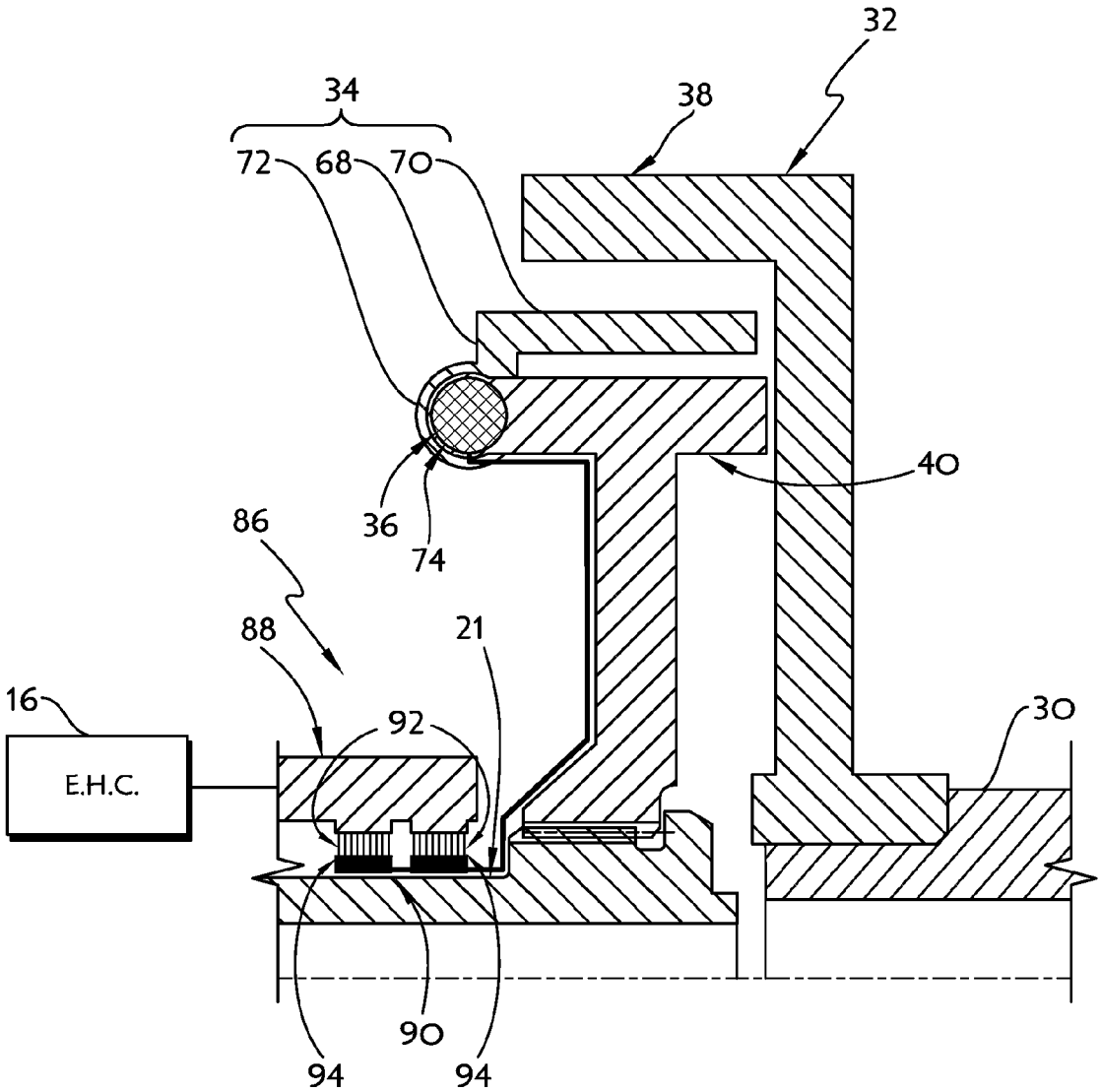

FIG. 4

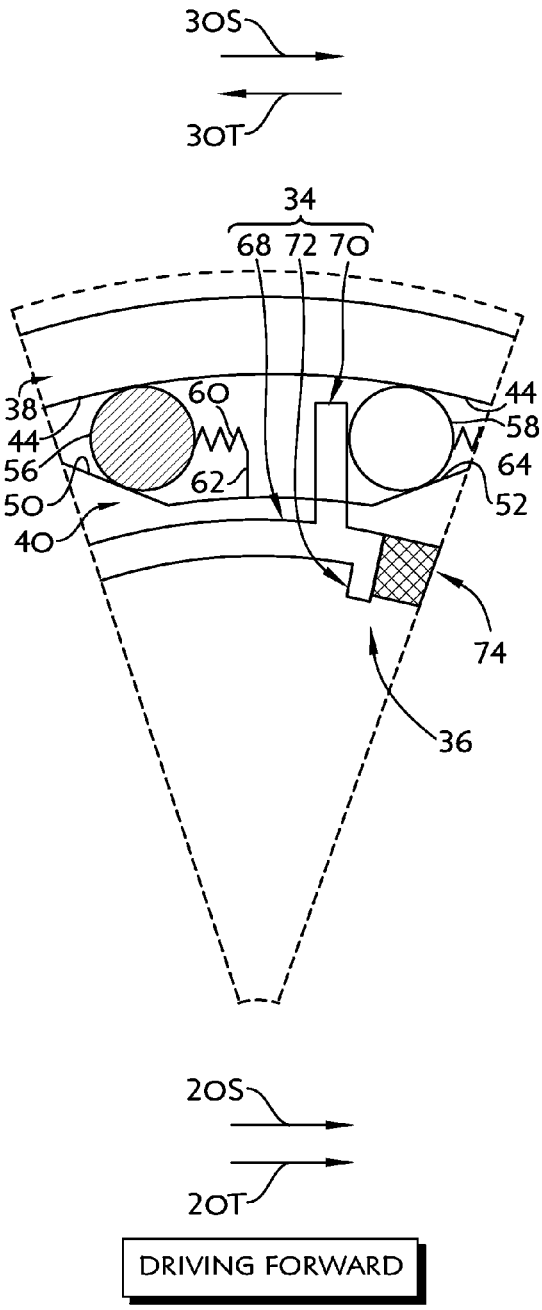
30S
30T
34
68 72 70
38
44
56
50
40
60
62
44
58
64
52
74
36
20S
20T
DRIVING FORWARD

FIG. 5A

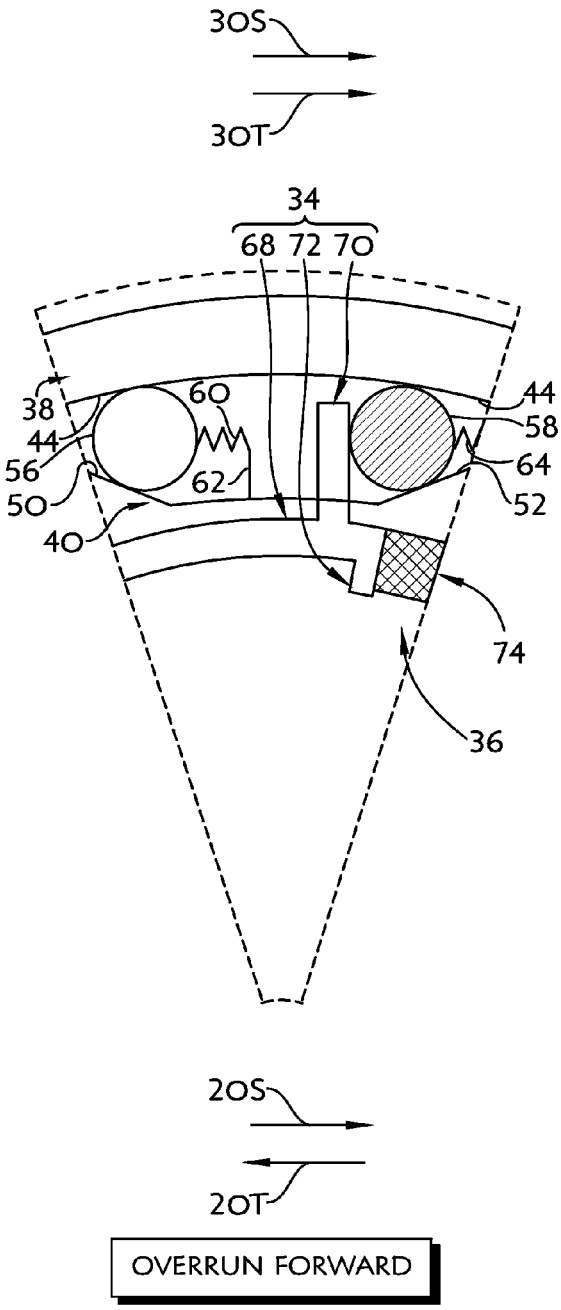
30S
30T
34
68 72 70
38
44
56
50
40
60
62
44
58
64
52
74
36
20S
20T
OVERRUN FORWARD

FIG. 5B

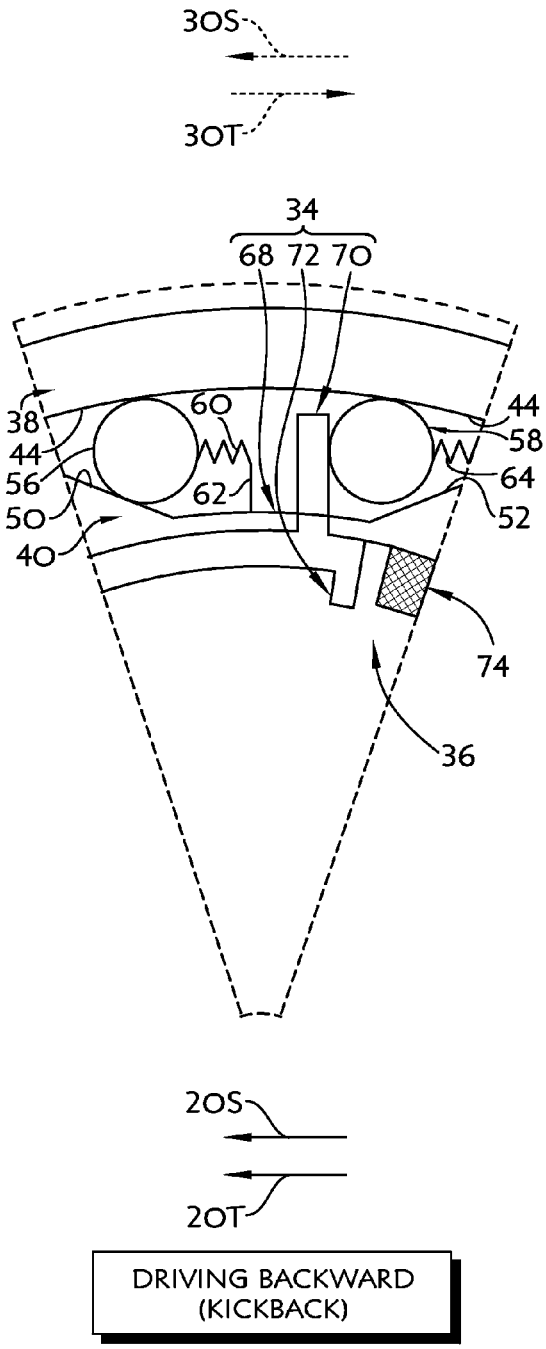
30S
30T
34
68 72 70
38
44
56
50
40
60
62
44
58
64
52
74
36
20S
20T
DRIVING BACKWARD
(KICKBACK)

FIG. 5C

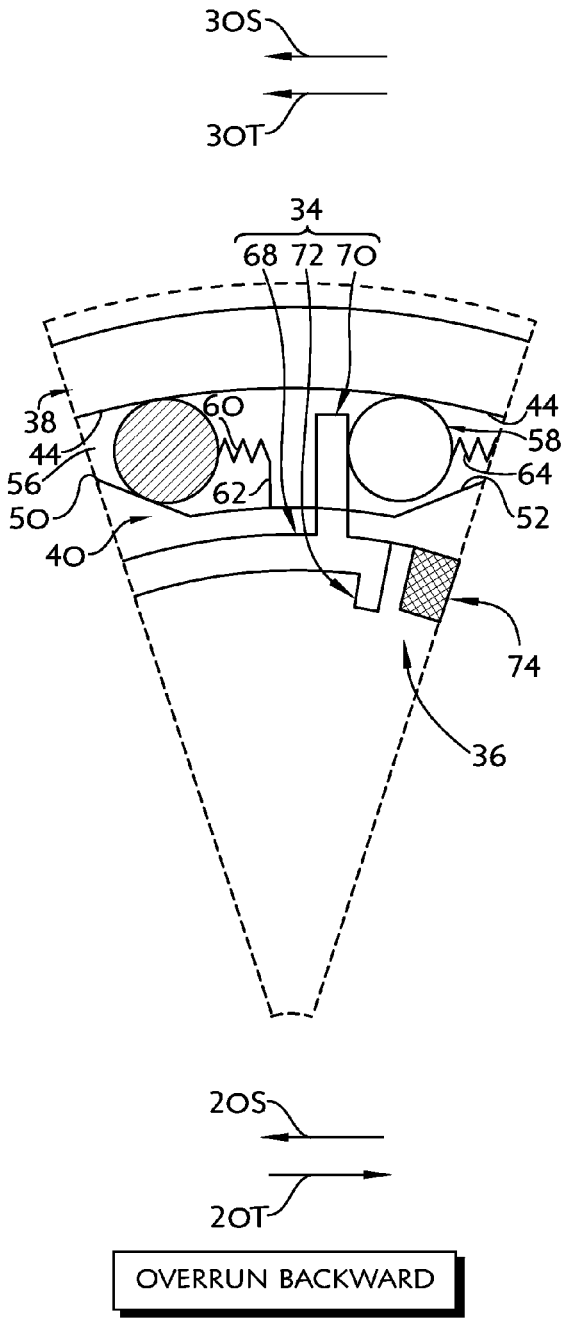
30S
30T
34
68 72 70
38
44
56
50
40
60
62
44
58
64
52
74
36
20S
20T
OVERRUN BACKWARD

FIG. 5D

ELECTROMAGNETICALLY-ACTUATED DIRECTION-SENSING ROLLER CLUTCH

CROSS-REFERENCE TO RELATED U.S. PATENT APPLICATION

This present application claims priority under 35 U.S.C. §119(e) to U.S. Provisional Patent Application Ser. No. 61/602,255, entitled "ELECTROMAGNETICALLY-ACTUATED DIRECTION-SENSING ROLLER CLUTCH" by Brian Schoolcraft, which was filed on Feb. 23, 2012, the entirety of which is hereby incorporated by reference.

TECHNICAL FIELD

The present disclosure relates generally to roller clutches, and more particularly, to a direction-sensing roller clutch for use in a transmission.

BACKGROUND

Transmissions are used to transfer a drive torque from a drive unit to a load. For example, a vehicle transmission transfers the drive torque from the vehicle engine to the vehicle load. Some transmissions include a finite set of gears, which may be selected to produce a specific transmission ratio. Other transmissions may include a ratio varying unit ("variator") to provide a substantially continuous variation of transmission ratio rather than a series of predetermined transmission ratios. Such transmissions are typically referred to as continuously variable transmissions (CVTs), infinitely variable transmissions (IVTs), toroidal transmissions, and/or the like.

Typical transmissions include one or more clutches. One type of clutch that may be used in a transmission, as well as other devices is known as a roller clutch. Conventional roller clutches can be used as one-way or overrunning clutches to allow freewheeling of an output (e.g., an output shaft) relative to an input (e.g., an input shaft) depending on the torque interaction of the input and output. For example, vehicle transmissions may include one-way clutches, such as a roller clutch, sensitive to torque differentials to connect an input shaft to an output shaft to allow freewheeling of a drive train between a drive unit and a vehicle load when direct connection of the drive unit to the vehicle load is undesirable. Similar devices such as sprag clutches and ratchets can also be used to provide one-way or overrunning clutch relationships between inputs and outputs.

SUMMARY

According to one aspect of the present disclosure, a transmission is disclosed. The transmission may include a rotational receiver, a variable transmission unit, and a direction-sensing roller clutch. The direction-sensing roller clutch may include an inner race coupled to one of the rotational receiver or the variable transmission unit, an outer race coupled to the other of the rotational receiver or the variable transmission unit, and an electromagnetic mover to be energized or de-energized. The direction-sensing roller clutch may be configured to transmit torque between the inner race and the outer race so that torque is transmitted between the rotational receiver and the variable transmission unit in response to the rotational receiver turning in a positive direction and applying positive torque or in response to the electromagnetic mover being energized.

In some embodiments, the direction-sensing roller clutch may include a first engagement member situated between the outer race and the inner race. The first engagement member may be moved into contact the outer race and the inner race to transmit torque between the outer race and the inner race when the rotational receiver is rotated in the positive direction.

The direction-sensing roller clutch may include a second engagement member situated between the outer race and the inner race. The second engagement member may be configured to transmit torque between the outer race and the inner race in response to the rotational receiver applying positive torque while the variable transmission unit applies negative torque.

In some embodiments, the direction-sensing roller clutch may include an actuator configured to move the first engagement member into contact with the outer race and the inner race. The actuator may move the first engagement member into contact with the outer race and the inner race in response to the electromagnetic mover being energized.

In some embodiments, the transmission may include an electro-hydraulic control system. The electro-hydraulic control system may be configured to energize the electromagnetic mover. The electro-hydraulic control system may include a sensor configured to detect the direction of rotation of the rotational receiver. The electromagnetic mover may include a plurality of electromagnets coupled for common rotation with the inner race. The electro-hydraulic control system may be coupled to the electromagnetic mover by a slip ring.

According to another aspect of the present disclosure, a roller clutch may include an outer race, an inner race, a first engagement member situated between the outer race and the inner race, a second engagement member situated between the outer race and the inner race, and an electromagnetic mover to be energized or de-energized. The first engagement member may be configured to engage the outer race and the inner race to transmit torque between the outer race and the inner race in response to the electromagnetic mover being energized and the inner race applying negative torque to the first engagement member while the outer race applies positive torque to the first engagement member. The second engagement member may be configured to engage the outer race and the inner race to transmit torque between the outer race and the inner race in response to the inner race applying positive torque to the second engagement member while the outer race applies negative torque to the second engagement member.

In some embodiments, the roller clutch may include an actuator. The actuator may be configured to move the first engagement member into contact with at least one of the outer race and the inner race.

The first engagement member may be biased away from engagement with at least one of the outer race and the inner race by a first spring. The second engagement member may be biased toward engagement with the outer race and the inner race by a second spring.

In some embodiments, electromagnetic mover may be energized in response to the inner race turning in a positive direction. The electromagnetic mover may be de-energized in response to the inner race turning in a negative direction.

It is contemplated that the actuator may include a paddle. The paddle may be formed from a ferromagnetic material radially aligned with the electromagnetic mover.

According to another aspect of the present disclosure, a drive train for driving a load is taught. The drive train may include a drive unit with a drive unit output shaft; and a transmission coupled to the drive unit. The transmission may

be configured to transfer torque between the drive unit and the load unless the drive unit output shaft turns in a negative direction and applies a negative torque to the transmission.

In some embodiments, the transmission may include a variable transmission unit and a direction-sensing roller clutch coupled between the drive unit and the variable transmission unit. The direction-sensing roller clutch may include an inner race coupled for common rotation with one of the drive unit output shaft or a variable transmission unit input shaft, an outer race coupled for common rotation with the other of the drive unit output shaft or the variable transmission unit input shaft, a clutch engagement assembly situated between the inner race and the outer race, and an electromagnet configured to be energized or de-energized.

It is contemplated that the clutch engagement assembly may include a first engagement member. The first engagement member may be configured to transmit torque between the drive unit output shaft and the variable transmission input shaft only in response to the electromagnet being energized and the drive unit output shaft applying torque in the negative direction.

The clutch engagement assembly may include a second engagement member. The second engagement member may be configured to transmit torque between the drive unit output shaft and the variable transmission input shaft in response to the drive unit output shaft applying torque in the positive direction while the variable transmission input shaft applies torque in the negative direction.

In some embodiments, the direction-sensing roller clutch may include an actuator configured to move the first engagement member into contact with the outer race and the inner race. The actuator may move the first engagement member into contact with the outer race and the inner race in response to a sensor detecting that the drive unit output shaft is turning in a positive direction. The actuator may move the first engagement member into contact with the outer race and the inner race in response to the electromagnet being energized. The electromagnet may be coupled for rotation with the inner race of the clutch engagement assembly.

DESCRIPTION OF THE DRAWINGS

The systems and methods described herein are illustrated by way of example and not by way of limitation in the accompanying figures. For simplicity and clarity of illustration, elements illustrated in the figures are not necessarily drawn to scale. For example, the dimensions of some elements may be exaggerated relative to other elements for clarity. Further, where considered appropriate, reference labels have been repeated among the figures to indicate corresponding or analogous elements.

FIG. **1** is a diagrammatic view of at least one embodiment of a vehicle drive train including a drive unit, a transmission, and an electro-hydraulic control;

FIG. **2** is a schematic diagram of at least one embodiment of the transmission setoff of the vehicle drive train of FIG. **1**;

FIG. **3** is an axial, elevation view of at least one embodiment of a direction-sensing roller clutch of the transmission of FIG. **2**;

FIG. **4** is a detailed cross-sectional view of the direction-sensing roller clutch of FIG. **3**;

FIG. **5**A is an axial view of at least one embodiment of a segment of the direction-sensing roller clutch of FIG. **3** showing the arrangement of the direction-sensing roller clutch when the vehicle power train is in a driving forward mode of operation;

FIG. **5**B is an axial view of at least one embodiment of the segment of the direction-sensing roller clutch of FIG. **5**A showing the arrangement of the direction-sensing roller clutch when the vehicle power train is in an overrun forward mode of operation wherein the drive unit is overrun by the transmission in a positive direction of rotation;

FIG. **5**C is an axial view of at least one embodiment of the segment of the direction-sensing roller clutch of FIG. **5**A showing the arrangement of the direction-sensing roller clutch when the vehicle power train is in a driving backward (or kickback) mode of operation wherein the drive unit attempts to drive the transmission in a negative direction of rotation; and

FIG. **5**D is an axial view of at least one embodiment of the segment of the direction-sensing roller clutch of FIG. **5**A showing the arrangement of the direction-sensing roller clutch when the vehicle power train is in an overrun backward mode of operation wherein the drive unit is overrun by the transmission in a negative direction of rotation.

DETAILED DESCRIPTION

While the concepts of the present disclosure are susceptible to various modifications and alternative forms, specific exemplary embodiments thereof have been shown by way of example in the drawings and will herein be described in detail. It should be understood, however, that there is no intent to limit the concepts of the present disclosure to the particular forms disclosed, but on the contrary, the intention is to cover all modifications, equivalents, and alternatives falling within the spirit and scope of the invention as defined by the appended claims.

References in the specification to "one embodiment", "an embodiment", "an example embodiment", etc., indicate that the embodiment described may include a particular feature, structure, or characteristic, but every embodiment may not necessarily include the particular feature, structure, or characteristic. Moreover, such phrases are not necessarily referring to the same embodiment. Further, when a particular feature, structure, or characteristic is described in connection with an embodiment, it is submitted that it is within the knowledge of one skilled in the art to effect such feature, structure, or characteristic in connection with other embodiments whether or not explicitly described.

Referring to FIG. **1**, in one embodiment, a drive train **10** of a vehicle **8** includes a drive unit **12** and a transmission **14** configured to drive a vehicle load **18**. The drive train **10** also includes an electro-hydraulic control system **16** coupled to the drive unit **12** and the transmission **14** to coordinate the operation of the drive unit **12** and the transmission **14** as discussed in more detail below. Additionally, in some embodiments, the drive train **10** may include other components commonly found in drive trains but not illustrated in FIG. **1** in order to increase clarity of the present description.

The drive unit **12** is illustratively embodied as a diesel internal combustion engine. However, in other embodiments, the drive unit **12** may be embodied as a spark-ignition type internal combustion engine (i.e. gasoline engine), a hybrid engine-electric motor combination, or another source of rotational power. The drive unit **12** includes a drive unit output shaft **20** that provides rotational power to the transmission **14**. As a convention throughout this description, the term "positive direction" refers to a clockwise direction when looking from the drive unit **12** toward the transmission **14** as indicated by an arrow **100** in FIG. **1**. The term "negative direction" refers to a counter-clockwise direction when looking from the drive unit **12** toward the transmission **14** indicated by an

arrow **102** in FIG. **1**. This convention will be used when referring to the direction of either speed or torque.

The transmission **14** is operable to transmit the rotational power from the drive unit **12** to the vehicle load **18** at various transmission ratios. The transmission ratio provided by the transmission **14** is controlled by the electro-hydraulic control system **16**. For example, the electro-hydraulic control system **16** is configured to modify the transmission ratio during operation so that the drive unit **12** operates at an optimized set of as a function of the vehicle load **18** and the speed of the vehicle **8**.

As shown in FIG. **2**, the transmission **14** illustratively includes a rotational receiver **21**, a variable transmission unit **22**, and a direction-sensing roller clutch **24** configured to prevent or otherwise resist the drive unit **12** from driving the variable transmission unit **22** in a negative direction. The rotational receiver **21** may be embodied as an input shaft, gear, coupling, sprocket, or other device capable of coupling with the drive unit output shaft **20** for common rotation therewith. As such, the rotational receiver **21** may form an integral part of the direction-sensing roller clutch **24** in some embodiments or may be embodied as a component of the drive train **10** separate from the direction-sensing roller clutch **24** but coupled therewith. The variable transmission unit **22** is illustratively embodied as an infinitely variable countershaft transmission unit. However, in other embodiments, the variable transmission unit **22** may be embodied as a continuously variable transmission unit or a "standard" transmission unit configured to provide a finite number of geared ratios. The direction-sensing roller clutch **24** couples the drive unit **12** to the variable transmission unit **22** via the rotational receiver **21** so that torque is transferred between the drive unit **12** and the variable transmission unit **22** through the direction-sensing roller clutch **24**, except in situations wherein the drive unit output shaft **20** turns in a negative direction and applies negative torque to the direction-sensing roller clutch **24**. For example, such a situation may occur immediately after shutdown of a diesel engine wherein pressure built up in the cylinders of the engine resists positive rotation and produces a "kick back."

The variable transmission unit **22** includes a countershaft assembly **26** and a variator **28** as shown diagrammatically in FIG. **2**. The illustrative variable transmission unit **22** has a variable forward speed mode, a variable reverse speed mode, and a driven neutral mode. The countershaft assembly **26** is coupled to the direction-sensing roller clutch **24** by a variable transmission input shaft **30** that turns in a positive direction to drive the variable transmission unit **22** during operation of the transmission **14**. The variator **28** is illustratively embodied as a toroidal variator having a plurality of rollers. However, in other embodiments, the variator **28** may be embodied as a friction-cone type variator or another suitable variable transmission configuration. The countershaft assembly **26** and the variator **28** cooperate to provide a substantially infinitely variable transmission unit. As with typical variable transmission units, rotation of the variable transmission input shaft **30** in a negative direction could result in the reversal of the variator **28**, which may damage rollers, cones, or other components of the variator **28**. As such, the direction-sensing roller clutch **24** is configured to prevent or otherwise restrict such negative rotation as discussed in more detail below.

The direction-sensing roller clutch **24** includes a clutch engagement assembly **32**, an engagement actuator **34**, and an electromagnetic mover **36** as shown in FIG. **2**. The clutch engagement assembly **32** transmits torque between the rotational receiver **21** of the transmission **14** and the variable transmission input shaft **30** when the clutch engagement assembly **32** is engaged. The clutch engagement assembly **32** is biased toward engagement when the drive unit output shaft **20** applies a positive torque to the rotational receiver **21** of the transmission **24** and biased out of engagement when the drive unit output shaft **20** applies a negative torque. However, as discussed in more detail, the engagement actuator **34** is configured to move the clutch engagement assembly **32** to an engaged configuration when the drive unit output shaft **20** applies a negative torque but is turning in the positive direction thereby making direction-sensing roller clutch **24** direction-sensitive.

As shown in FIG. **3**, the clutch engagement assembly **32** includes an outer race **38**, an inner race **40**, and a plurality of roller sets **42**. The outer race **38** is coupled to the variable transmission input shaft **30** for common rotation therewith. Similarly, the inner race **40** is coupled to the rotational receiver **21** for common rotation therewith. The plurality of roller sets **42** are situated between the outer race **38** and the inner race **40**.

The outer race **38** is formed to include a cylindrical inner surface **44**. The inner race **40** is formed to include an outer surface **46** opposite the cylindrical inner surface **44** of the outer race **38**. The outer surface **46** of the inner race **40** includes a series of arcuate sections **48** defined between spaced-apart ramped protrusions **49**. Each ramped protrusion **49** includes a forward ramp section **50** (i.e., the left side of the ramped protrusion **49** when looking from the drive unit **12** toward the direction-sensing roller clutch **24**) and a rearward ramp section **52** (i.e., the right side of the ramped protrusion **49** when looking from the drive unit **12** toward the direction-sensing roller clutch **24**). The outer race **38** and the inner race **40** are positioned such that each arcuate section **48**, forward ramp section **50**, and rearward ramp section **52** of the inner race **40** forms a pocket **54** between the inner surface **44** of the outer race **38** and the outer surface **46** of the inner race **40**.

A roller set **42** is positioned in each pocket **54** between the outer race **38** and the inner race **40** as shown in FIG. **3**. Each roller set **42** includes a forward roller **56** and a rearward roller **58**. The forward roller **56** is biased by a biasing member **60**, illustratively a spring, toward contact with the inner surface **44** of outer race **38** and the forward ramp section **50** of the inner race **40**. Each spring **60** is coupled to a spring support **62** which is fixed to the inner race **40**. Each rearward roller **58** is biased by a spring **64** away from contact with the inner surface **44** of outer race **38** and a rearward ramp section **52** of inner race **40**. The spring **64** is coupled to a spring support **66** which is fixed to the inner race **40**. By biasing the rearward rollers **58** away from contact with the outer race **38** and the inner race **40**, the clutch engagement assembly **32** is biased away from engagement when the drive unit output shaft **20** applies a negative torque to the direction-sensing roller clutch **24**. The engagement actuator **34** and the electromagnetic mover **36** cooperate to overcome the biasing force of the spring **64** so that the clutch engagement assembly **32** is engaged when the drive unit output shaft **20** turns in the positive direction.

Referring back to FIG. **2**, the engagement actuator **34** is formed to include an actuator ring **68**, a plurality of actuation members or fingers **70**, and one or more paddles **72**. The fingers **70** extend axially from the actuator ring **68** toward the clutch engagement assembly **34**. The paddles **72** illustratively extend radially inward from the actuator ring **68** and are formed from a ferromagnetic material. The actuator ring **68** supports the actuation fingers **70**. Each actuation finger **70** extends into a pocket **54** and is configured to move between an activated position and a deactivated position. It should be

appreciated that although the illustrative embodiment of FIG. **2** includes a plurality of paddles **72**, a single paddle **72** may be used in some embodiments.

In the activated position, shown in FIG. **3**, each actuation finger **70** contacts a corresponding rearward roller **58** overcoming the biasing force of the spring **64** to move the corresponding rearward roller **58** into contact with the inner surface **44** of the outer race **38** and a rearward ramp section **52** of the inner race **40**. Conversely, in the deactivated position, each actuation finger **70** is moved out of contact with or otherwise positioned to allow the corresponding rearward roller **58** to be pushed out of contact with the inner surface **44** of the outer race **38** and a rearward ramp section **52** of the inner race **40** by the spring **64**.

The electromagnetic mover **36** is configured to cooperate with the electro-hydraulic controller **16** to move the actuator **34** to the activated position when the drive unit output shaft **20** turns in a positive direction and to the deactivated position when the drive unit output shaft **20** turns in a negative direction. The electromagnetic mover **36** rotates with the inner race **40** of the clutch engagement assembly **32** and with the rotational receiver **21**. In the illustrative embodiment, the electromagnetic mover **36** is embodied as a plurality of electromagnets **74** that extend axially from the inner race **40** of the clutch engagement assembly **32**. Each electromagnet **74** is radially aligned with a corresponding paddle **72** of the engagement actuator **34**. Each electromagnet **74** is configured to be energized, thereby exerting an attractive force on the corresponding paddle **72**, and de-energized, thereby exerting substantially no force on the corresponding paddle **72**. In some embodiments, the electromagnetic mover **36** may be embodied as a single electromagnet **34** corresponding to a single paddle **72** as discussed above.

When the electromagnets **74** of the electromagnetic mover **36** are energized, the engagement actuator **34** is moved to the activated position in response to the paddles **72** of the engagement actuator **32** being pulled into contact with the electromagnets **74** as shown, for example, in FIGS. **5**A and **5**B. When the electromagnets **74** of the electromagnetic mover **36** are de-energized, the engagement actuator **34** is moved to the deactivated position by the spring **64** as shown, for example, in FIGS. **5**C and **5**D. The electro-hydraulic controller **16** may be configured to energize and de-energize the electromagnets **74**.

The electro-hydraulic control system **16** illustratively includes a sensor **76**, a power source **78**, and a controller **80**. The sensor **76** is illustratively a sensor configured to determine the direction of rotation of the drive unit output shaft **20**. The sensor **76** may be embodied as, for example, an accelerometer coupled to the drive unit output shaft **20** or to the rotational receiver **21**. The sensor **76** is communicatively coupled to the controller **80**. The power source **78** is coupled to the controller **80** and provides power to energize the electromagnets **74** of the electromagnetic mover **34**.

The controller **80** illustratively includes a memory **82** containing instructions and a processor **84** coupled to the memory **82** to execute the instructions stored therein. The memory **82** may be embodied as or otherwise include one or more memory devices or data storage locations including, for example, dynamic random access memory devices (DRAM), synchronous dynamic random access memory devices (SDRAM), double-data rate synchronous dynamic random access memory device (DDR SDRAM), mask read-only memory (ROM) devices, erasable programmable ROM (EPROM), electrically erasable programmable ROM (EEPROM) devices, flash memory devices, and/or other volatile and/or non-volatile memory devices. The processor **84** may be embodied as any type of processor capable of executing the instructions stored in the memory **82**. The illustrative processor **84** is a single core processor, but processors having multiple cores may be used in other embodiments.

When the processor **82** executes the instructions stored in the memory **84**, the controller **80** is configured to couple the power source **78** to the electromagnets **74** in response to the sensor **76** indicating that the drive unit output shaft **20** is turning in the positive direction and to disconnect the power source **78** from the electromagnets **74** in response to the sensor **76** indicating that the drive unit output shaft is turning in the negative direction. Thus, the electromagnets **74** of the electromagnetic mover **72** are energized when the drive unit output shaft **20** turns in the positive direction and are de-energized when the drive unit output shaft **20** turns in the negative direction.

Referring now to FIG. **4**, the electro-hydraulic control system **16** is electrically coupled to the electromagnets **74** via a slip ring **86**. The slip ring **86** illustratively includes a stationary arm **88** and a rotating platform **90**. The stationary arm **88** includes a number of brushes **92** electrically coupled to the electro-hydraulic control system **16**. The rotating platform **90** is illustratively coupled for rotation with the rotational receiver **21** and includes a number of rings **94** electrically coupled to the electromagnets **74**. The brushes **92** contact the rings **94** to electrically couple the elector-hydraulic control system **16** with the electromagnets **74**. In other embodiments, inductive transmission may be used to electrically couple the electro-hydraulic control system **16** with the electromagnets **74**.

Referring back to FIG. **5**A, a drive forward mode of drive train **10** is shown wherein the drive unit **12** drives the transmission **14** in a positive direction. The clutch engagement assembly **32** is engaged during the drive forward mode so that power from the drive unit **12** can be used to move the vehicle load **18**. In the drive forward mode, the drive unit **12** drives the transmission **14** by applying torque to the rotational receiver **21** and the direction-sensing roller clutch **24** in a positive direction through the drive unit output shaft **20** as indicated by arrow **20**T. A reactionary torque is applied in a negative direction by the variable transmission input shaft **30** to the direction-sensing roller clutch **24** as indicated by arrow **30**T. As the drive unit **12** drives the transmission **14** in the positive direction, the drive unit output shaft **20** rotates in a positive direction as indicated by arrow **20**S and the transmission input shaft **30** rotates in a positive direction as indicated the by arrow **30**S.

Each forward roller **56** of the clutch engagement assembly **32** contacts and engages the outer race **38** and the inner race **40** such that that the clutch engagement assembly **32** is engaged during the drive forward mode. Each forward ramp section **50** of the inner race **40** urges the corresponding forward roller **56** toward the outer race **38** in response to the torque interaction of between inner race **40** (coupled to the rotational receiver **21** and the drive unit output shaft **20**) and outer race **38** (coupled to the transmission input shaft **30**). The forward roller **56** is thereby wedged between the outer race **38** and the inner race **40**. Torque is transmitted through the forward roller **56** between the outer race **38** and the inner race **40** when the forward roller **56** is wedged between the outer race **38** and the inner race **40** as indicated by the shading of forward roller **56** in FIG. **5**A.

The rearward roller **58** of the clutch engagement assembly **32** is moved into contact with the outer race **38** and inner race **40** by the engagement actuator **34** and the electromagnetic mover **36** during drive forward mode as shown in FIG. **5**A. The electromagnetic mover **36** is energized and the engage-

ment actuator **34** is moved to the activated position so that the rearward roller **58** contacts outer race **38** and the inner race **40** in response to the drive unit output shaft **20** being rotated in the positive direction. However, the torque interaction of the inner race **40** and the outer race **38** does not force the rearward roller **58** to be wedged between the outer race **38** and the inner race **40**. As such, torque is not transmitted by the rearward roller **58** when the drive train **10** is in drive forward mode.

Referring again to FIG. **5**B, an overrun forward mode of the drive train **10** is shown wherein the drive unit **12** is overrun (or outpaced) by the transmission **14** in a positive direction. Such a situation may occur when, for example, the vehicle **8** is traveling down a hill and the vehicle **8** is accelerated by gravity. The clutch engagement assembly **32** is engaged during overrun forward mode so that the drive unit **12** can slow the transmission **14**. In overrun forward mode, the transmission **14** drives the drive unit **12** by applying torque to the direction-sensing roller clutch **24** in a positive direction through the transmission input shaft **30** as indicated by arrow **30**T. A reactionary torque is applied in a negative direction by the drive unit output shaft **20** to the rotational receiver **21** and the direction-sensing roller clutch **24** as indicated by arrow **20**T. As the transmission **14** drives the drive unit **12** in the positive direction, the transmission input shaft **30** rotates in a positive direction as indicated by arrow **30**S and the drive unit output shaft **20** rotates in a positive direction as indicated by arrow **20**S.

During the engine overrun forward mode, the forward rollers **56** of the clutch engagement assembly **32** contact the outer race **38** and the inner race **40** as shown in FIG. **5**B. However, the torque interaction of the inner race **40** and the outer race **38** does not force the forward rollers **56** to be wedged between the outer race **38** and the inner race **40**. As such, torque is not transmitted by the forward rollers **56** when the drive train **10** is in engine overrun forward mode.

Additionally, during the engine overrun forward mode, the rearward rollers **58** of the clutch engagement assembly **32** are moved into contact with the outer race **38** and the inner race **40** by the engagement actuator **34** as shown in FIG. **5**B. Because the drive unit output shaft **20** is rotating in the positive direction, the electromagnetic mover **36** is energized and the engagement actuator **34** activates the rearward rollers **58** so that the rearward rollers **58** contact the outer race **38** and the inner race **40**. The rearward rollers **58** engage the races **38**, **40** so that the clutch engagement assembly **32** is engaged in engine overrun forward mode. The rearward ramp sections **52** of the inner race **40** urge the rearward rollers **58** toward the outer race **38** in response to the torque interaction of the inner race **40** (coupled to rotational receiver **21** and drive unit output shaft **20**) and the outer race **38** (coupled to transmission input shaft **30**). The rearward rollers **58** are resultantly wedged between the outer race **38** and the inner race **40**. Torque is transmitted through the rearward rollers **58** between the outer race **38** and the inner race **40** when the rearward rollers **58** are wedged between the outer race **38** and the inner race **40** as indicated by the shading of rearward roller **58** in FIG. **5**B.

Referring again to FIG. **5**C, a driving backward, or "kick-back," mode which may be experienced by the drive train **10** is shown. Such a set of conditions may be applied to the direction-sensing roller clutch **24**, for example, immediately after a diesel engine drive unit **12** is shut down. At shut down, the pressures built up in a diesel engine may overcome the frictional forces in the engine and cause negative rotation of the drive unit output shaft **20**. In the driving backward mode, the drive unit **12** attempts to drive the transmission **14** in a negative direction by rotating the drive unit output shaft **20** in a negative direction as indicated by arrow **20**S. Rotation of the drive unit output shaft **20** in the negative direction applies torque to the rotation receiver **21** and to the direction-sensing roller clutch **24** in a negative direction as indicated by arrow **20**T. When the drive unit output shaft **20** turns in the negative direction, the electromagnetic mover **36** is energized and the clutch engagement assembly **32** of the direction-sensing roller clutch **24** is disengaged. Thus, during the driving backward mode, the drive unit output shaft **20** freewheels relative to the variable transmission unit **22**. Preventing the drive unit **12** from driving the transmission **14** in the negative direction during the driving backward mode may avoid damage to the variable transmission unit **22**.

The forward rollers **56** of the clutch engagement assembly **32** contact the outer race **38** and the inner race **40** during driving backward mode as shown in FIG. **5**C. However, the torque interaction of the inner race **40** and the outer race **38** does not force the forward roller **56** to be wedged between the outer race **38** and the inner race **40** and torque is not transmitted by the forward roller **56** when the drive train **10** is in the driving backward mode.

Additionally, during the driving backward mode, the rearward roller **58** of the clutch engagement assembly **32** is moved out of contact with the outer race **38** and/or the inner race **40** by the spring **64** as shown in FIG. **5**C. Because the drive unit output shaft **20** is rotated in the negative direction, the electromagnetic mover **36** is de-energized and the engagement actuator **34** is moved to the deactivated position so that the rearward roller **58** is free to move out of contact with the outer race **38** and/or the inner race **40**. Since the rearward roller **58** is out of contact with the outer race **38** and the inner race **40**, the rearward roller **58** does not transmit torque between the outer race **38** and/or the inner race **40**.

Referring again to FIG. **5**D, an overrun backward mode of the drive train **10** is shown. In the overrun backward mode, the drive unit **12** is overrun (or outpaced) by the transmission **14** in a negative direction. Such a situation may occur when, for example, the vehicle **8** is fully loaded and stopped on an incline and is rolled backward down the incline by gravity. The clutch engagement assembly **32** is engaged during the overrun backward mode so that the drive unit **12** can slow the transmission **14**. In the overrun backward mode, the transmission **14** drives the drive unit **12** by applying torque to the direction-sensing roller clutch **24** in a negative direction through transmission input shaft **30** as suggested by arrow **30**T. A reactionary torque is applied in a positive direction by drive unit output shaft **20** to direction-sensing roller clutch **24** as suggested by arrow **20**T. As the transmission **14** drives the drive unit **12** in the negative direction, the transmission input shaft **30** rotates in a negative direction as indicated by arrow **30**S and the drive unit output shaft **20** rotates in a negative direction as indicated by arrow **20**S.

The forward roller **56** of the clutch engagement assembly **32** contacts and engages the outer race **38** and the inner race **40** so that the clutch engagement assembly **32** is engaged during overrun backward mode. The forward ramp section **50** of the inner race **40** urges the forward roller **56** toward the outer race **38** in response to the torque interaction of the inner race **40** and the outer race **38** so that the forward roller **56** is wedged between the outer race **38** and the inner race **40**. Torque is transmitted through the forward roller **56** between the outer race **38** and the inner race **40** when the forward roller **56** is wedged between the outer race **38** and the inner race **40** as indicated by the shading of the forward roller **56** in FIG. **5**D.

Additionally, during the overrun backward mode, the rearward roller **58** of the clutch engagement assembly **32** is

moved out of contact with the outer race **38** and/or the inner race **40** by the spring **64** as shown in FIG. **5**D. Because the drive unit output shaft **20** is rotated in the negative direction (even slightly), the electromagnetic mover **36** is de-energized and the engagement actuator **34** is moved to the deactivated position so that the rearward roller **58** is out of contact with the outer race **38** and/or the inner race **40**. Since the rearward roller **58** is out of contact with the outer race **38** and/or the inner race **40**, the rearward roller **58** does not transmit torque between the outer race **38**.

It should be understood that the direction-sensing roller clutch **24** of the present disclosure may be used in other applications wherein single-mode freewheeling of a driver shaft relative to a driven shaft is desired. Specifically, the direction-sensing roller clutch **24** may be incorporated in applications in which it is desirable to (i) disconnect a driver shaft from a driven shaft when the driver shaft turns and applies torque in one direction and (ii) connect the driver shaft and the driven shaft in all other modes of operation. Additionally it should be appreciated that the direction-sensing roller clutch **24** of the present example can be reversed to provide torque transfer unless an input rotated in a positive direction and applied a positive torque.

While the disclosure has been illustrated and described in detail in the drawings and foregoing description, such an illustration and description is to be considered as exemplary and not restrictive in character, it being understood that only illustrative embodiments have been shown and described and that all changes and modifications that come within the spirit of the disclosure are desired to be protected.

The invention claimed is:

1. A transmission comprising:

a rotational receiver;

a variable transmission unit; and

a direction-sensing roller clutch including an inner race coupled to one of the rotational receiver or the variable transmission unit, an outer race coupled to the other of the rotational receiver or the variable transmission unit, and an electromagnetic mover configured (i) to be energized or de-energized and (ii) for rotation with the rotational receiver,

wherein the direction-sensing roller clutch is configured to transmit torque between the inner race and the outer race so that torque is transmitted between the rotational receiver and the variable transmission unit in response to (i) the rotational receiver turning in a positive direction and applying positive torque or (ii) in response to the electromagnetic mover being energized.

2. The transmission of claim **1**, wherein the direction-sensing roller clutch includes a first engagement member situated between the outer race and the inner race, the first engagement member configured to move into contact with the outer race and the inner race to transmit torque between the outer race and the inner race when the rotational receiver is rotated in the positive direction.

3. The transmission of claim **2**, wherein the direction-sensing roller clutch includes a second engagement member situated between the outer race and the inner race, the second engagement member configured to transmit torque between the outer race and the inner race in response to the rotational receiver applying positive torque while the variable transmission unit applies negative torque.

4. The transmission of claim **2**, wherein the direction-sensing roller clutch includes an actuator configured to move the first engagement member into contact with the outer race and the inner race.

5. The transmission of claim **4**, wherein the actuator is configured to move the first engagement member into contact with the outer race and the inner race in response to the electromagnetic mover being energized.

6. The transmission of claim **5**, further comprising an electro-hydraulic control system configured to energize the electromagnetic mover.

7. A transmission comprising

a rotational receiver;

a variable transmission unit;

a direction-sensing roller clutch including an inner race coupled to one of the rotational receiver or the variable transmission unit, an outer race coupled to the other of the rotational receiver or the variable transmission unit, an electromagnetic mover to be energized or de-energized, a first engagement member situated between the outer race and the inner race, and an actuator configured to move the first engagement member into contact with the outer race and the inner race; and

an electro-hydraulic control system configured to energize the electromagnetic mover,

wherein (i) the direction-sensing roller clutch is configured to transmit torque between the inner race and the outer race so that torque is transmitted between the rotational receiver and the variable transmission unit in response to (a) the rotational receiver turning in a positive direction and applying positive torque or (b) in response to the electromagnetic mover being energized, (ii) the first engagement member is configured to move into contact with the outer race and the inner race to transmit torque between the outer race and the inner race when the rotational receiver is rotated in the positive direction, (iii) the actuator is configured to move the first engagement member into contact with the outer race and the inner race in response to the electromagnetic mover being energized, and (iv) the electro-hydraulic control system includes a sensor configured to detect the direction of rotation of the rotational receiver.

8. The transmission of claim **6**, wherein the electromagnetic mover includes a plurality of electromagnets coupled for common rotation with the inner race.

9. A transmission comprising

a rotational receiver;

a variable transmission unit;

a direction-sensing roller clutch including an inner race coupled to one of the rotational receiver or the variable transmission unit, an outer race coupled to the other of the rotational receiver or the variable transmission unit, an electromagnetic mover to be energized or de-energized, a first engagement member situated between the outer race and the inner race, and an actuator configured to move the first engagement member into contact with the outer race and the inner race; and

an electro-hydraulic control system configured to energize the electromagnetic mover,

wherein (i) the direction-sensing roller clutch is configured to transmit torque between the inner race and the outer race so that torque is transmitted between the rotational receiver and the variable transmission unit in response to (a) the rotational receiver turning in a positive direction and applying positive torque or (b) in response to the electromagnetic mover being energized, (ii) the first engagement member is configured to move into contact with the outer race and the inner race to transmit torque between the outer race and the inner race when the rotational receiver is rotated in the positive direction, (iii) the actuator is configured to move the first engage-

ment member into contact with the outer race and the inner race in response to the electromagnetic mover being energized, and (iv) the electro-hydraulic control system is coupled to the electromagnetic mover by a slip ring.

* * * * *