US009480895B2

(12) **United States Patent**
Ivanic et al.

(10) **Patent No.: US 9,480,895 B2**
(45) **Date of Patent: *Nov. 1, 2016**

(54) **PROJECTILE LAUNCHING DEVICE**

(71) Applicant: **Imperial Toy, LLC**, North Hills, CA (US)

(72) Inventors: **Robert J. Ivanic**, Saugus, CA (US); **Tyler James Russell**, Los Angeles, CA (US); **Joseph Wong Wai Ching**, Hong Kong (CN); **Lee Ronald Loetz**, Valley Village, CA (US)

(73) Assignee: **Imperial Toy, LLC**, North Hills, CA (US)

(*) Notice: Subject to any disclaimer, the term of this patent is extended or adjusted under 35 U.S.C. 154(b) by 0 days.

This patent is subject to a terminal disclaimer.

(21) Appl. No.: **14/630,555**

(22) Filed: **Feb. 24, 2015**

(65) **Prior Publication Data**

US 2015/0174463 A1 Jun. 25, 2015

Related U.S. Application Data

(63) Continuation of application No. 13/343,660, filed on Jan. 4, 2012, now Pat. No. 8,960,172.

(51) **Int. Cl.**

F41B 3/00	(2006.01)
A63B 65/12	(2006.01)
A63B 59/02	(2006.01)

(52) **U.S. Cl.**

CPC ***A63B 65/122*** (2013.01); ***A63B 59/02*** (2013.01); ***A63B 59/20*** (2015.10); ***F41B 3/00*** (2013.01); *A63B 21/4021* (2015.10); *A63B 60/20* (2015.10); *A63B 60/50* (2015.10)

(58) **Field of Classification Search**

CPC F41B 3/00; A63B 59/02; A63B 65/122

See application file for complete search history.

(56) **References Cited**

U.S. PATENT DOCUMENTS

1,585,446	A	5/1926	Warwick	
3,049,352	A	8/1962	Hancock	
4,157,828	A	6/1979	Cosmopulos	
4,972,884	A	11/1990	Souers et al.	
7,686,001	B2	3/2010	Fitt	
8,302,585	B2	11/2012	FitzGerald	
8,960,172	B2 *	2/2015	Ivanic	A63B 59/02 124/5
2010/0018510	A1	1/2010	Shoaff	

* cited by examiner

Primary Examiner — John Ricci

(74) *Attorney, Agent, or Firm* — Snell & Wilmer L.L.P.

(57) **ABSTRACT**

A launching device comprises a shaft having a first end and a second end, a head coupled to the first end of the shaft and a handle coupled to the second end of the shaft. The head comprises a cavity and a launch ramp curved both upwardly and outwardly from the cavity, wherein a distal portion of the launch ramp extends outwardly beyond the cavity in a forward launching direction. An angle is defined by the longitudinal grip axis and the distal portion of the launch ramp to direct a projectile disposed in the cavity in the forward launching direction.

17 Claims, 6 Drawing Sheets

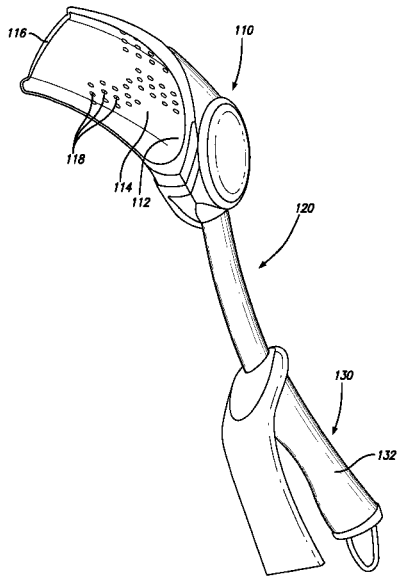

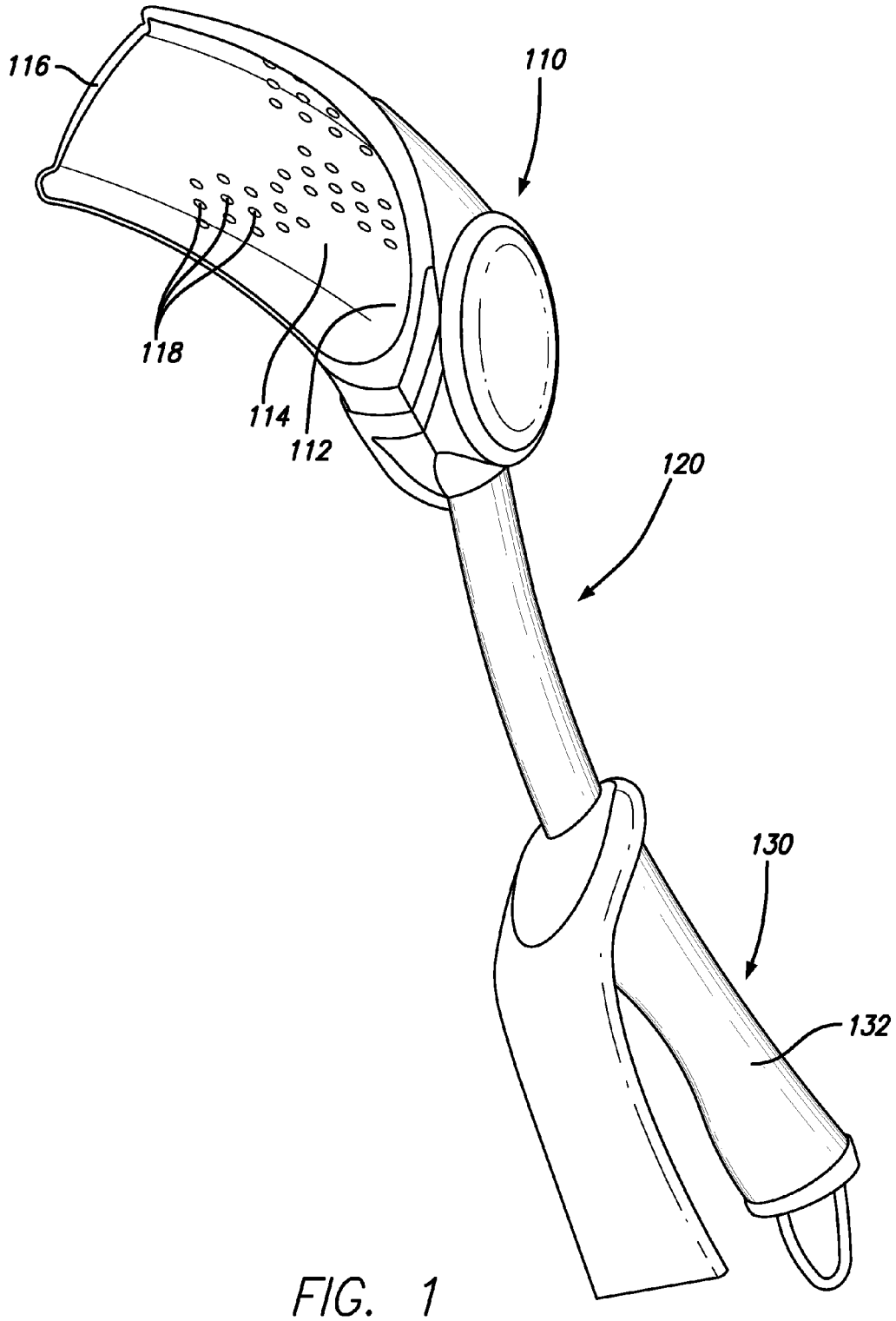

FIG. 1

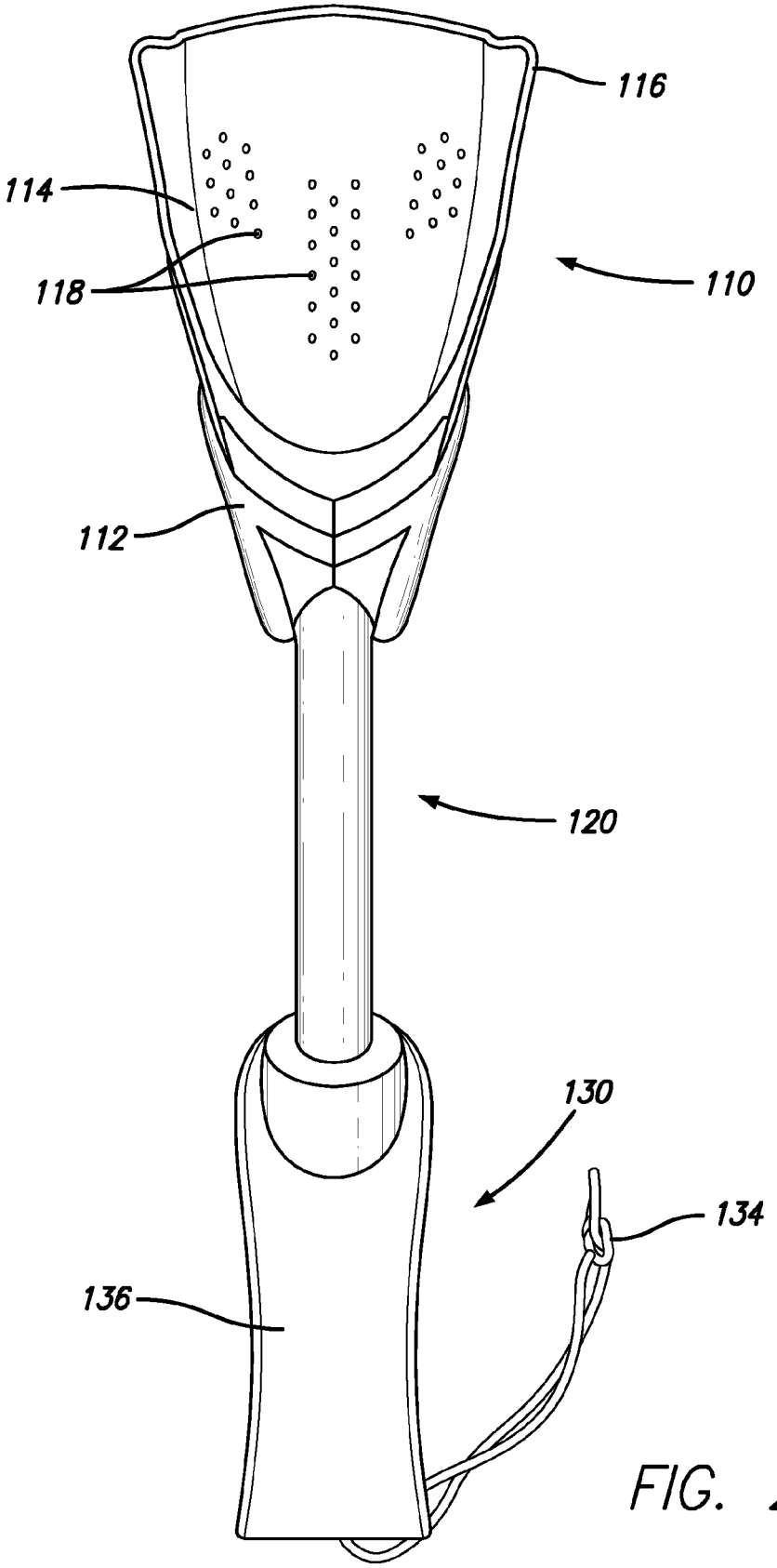

FIG. 2

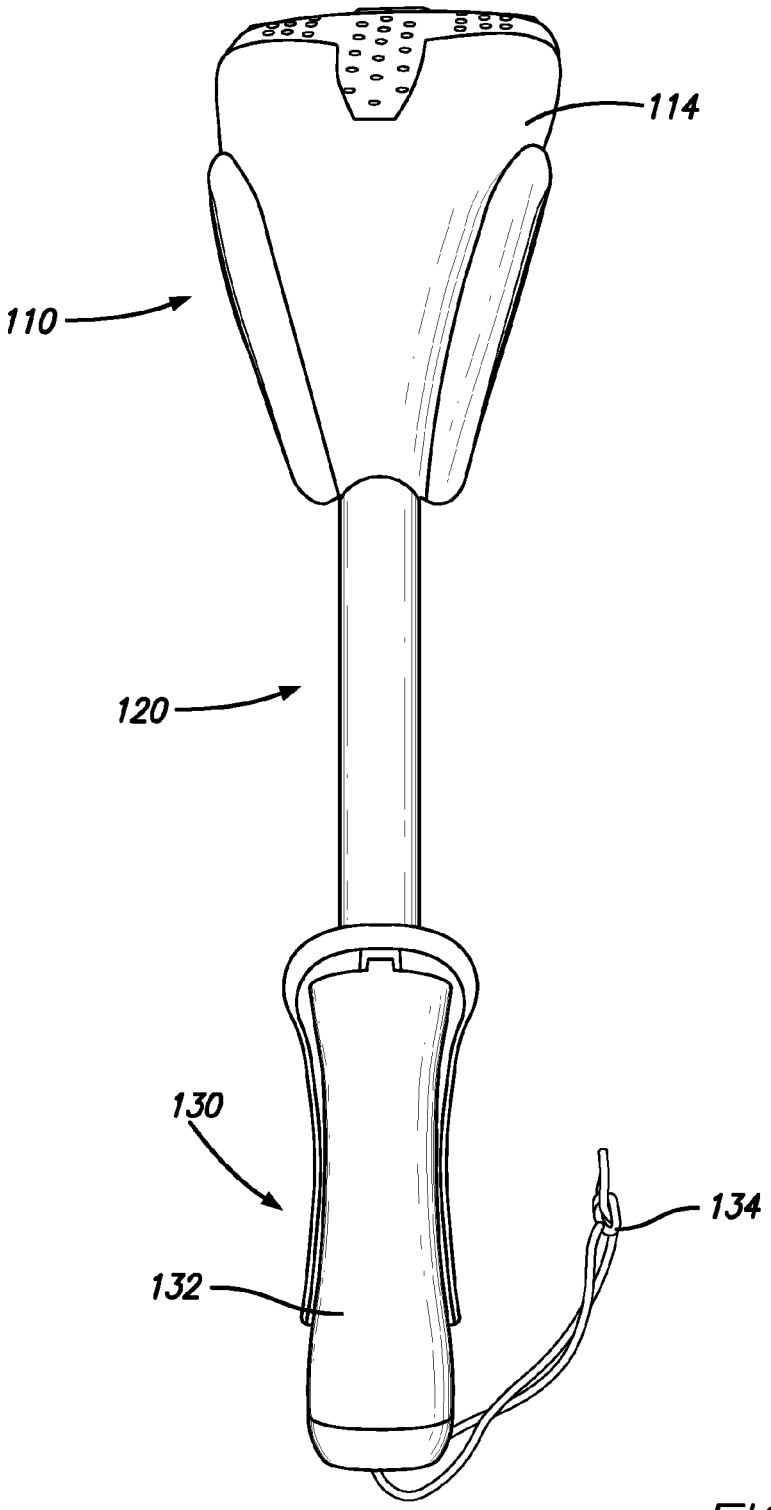

FIG. 3

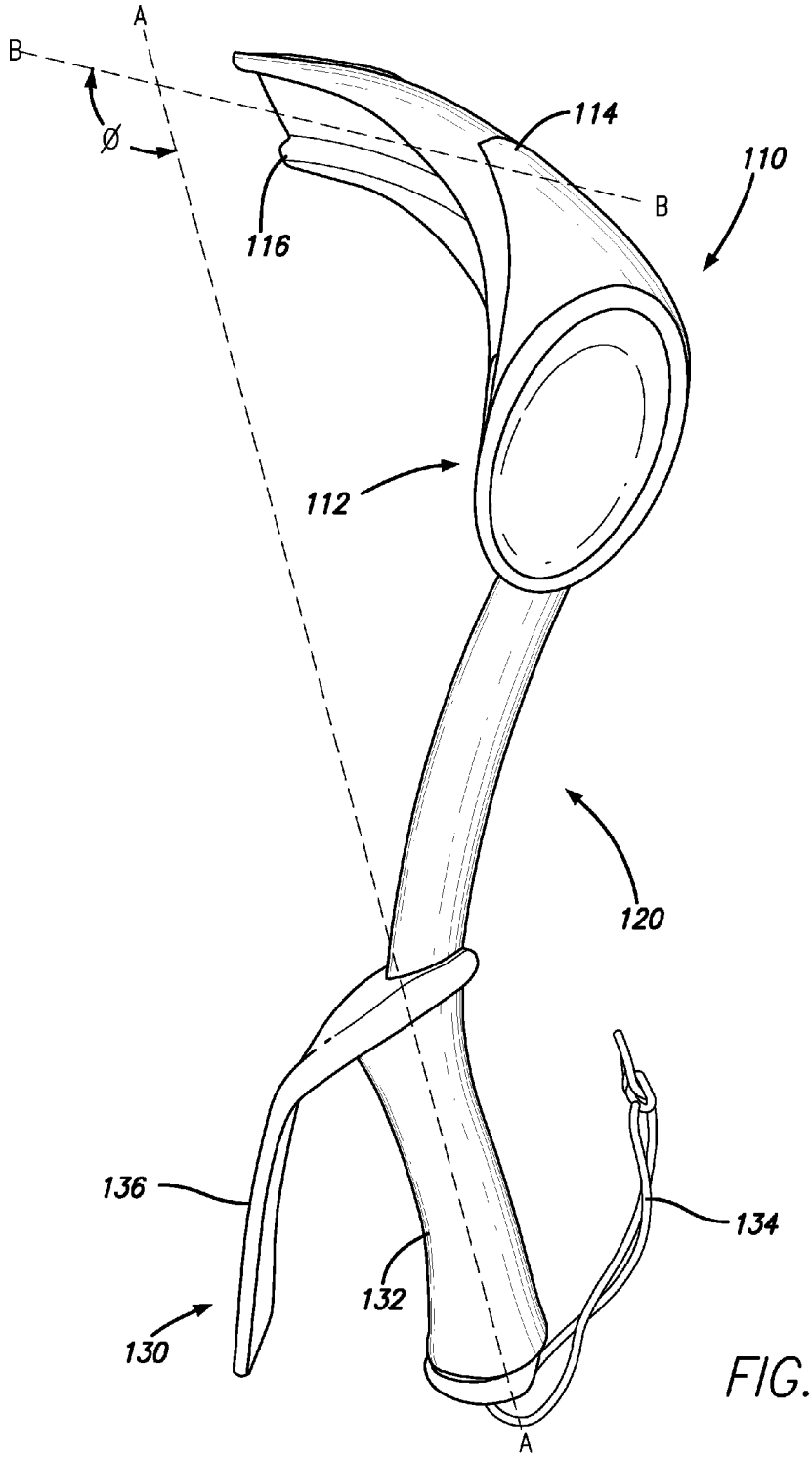

FIG. 4

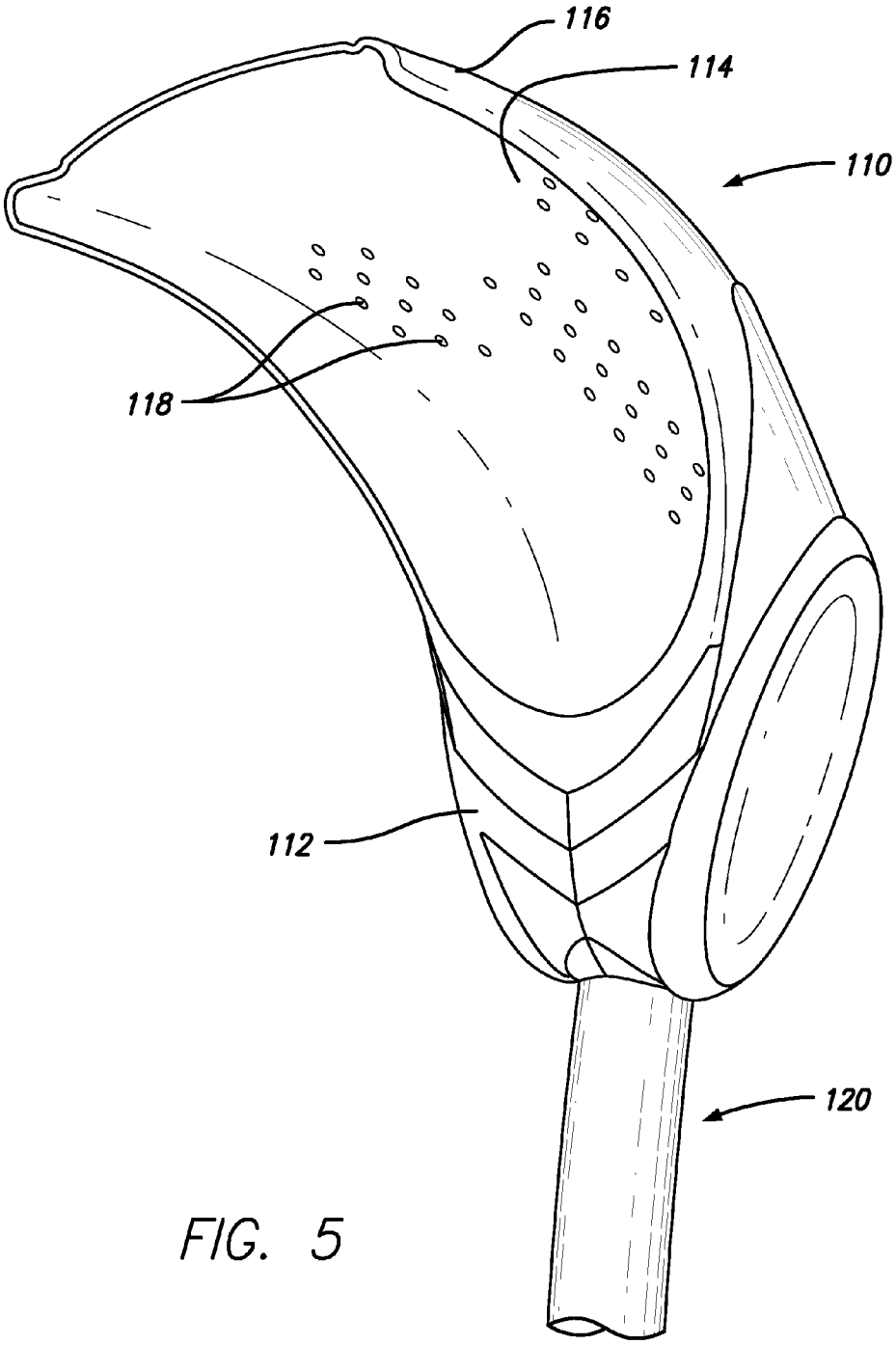

FIG. 5

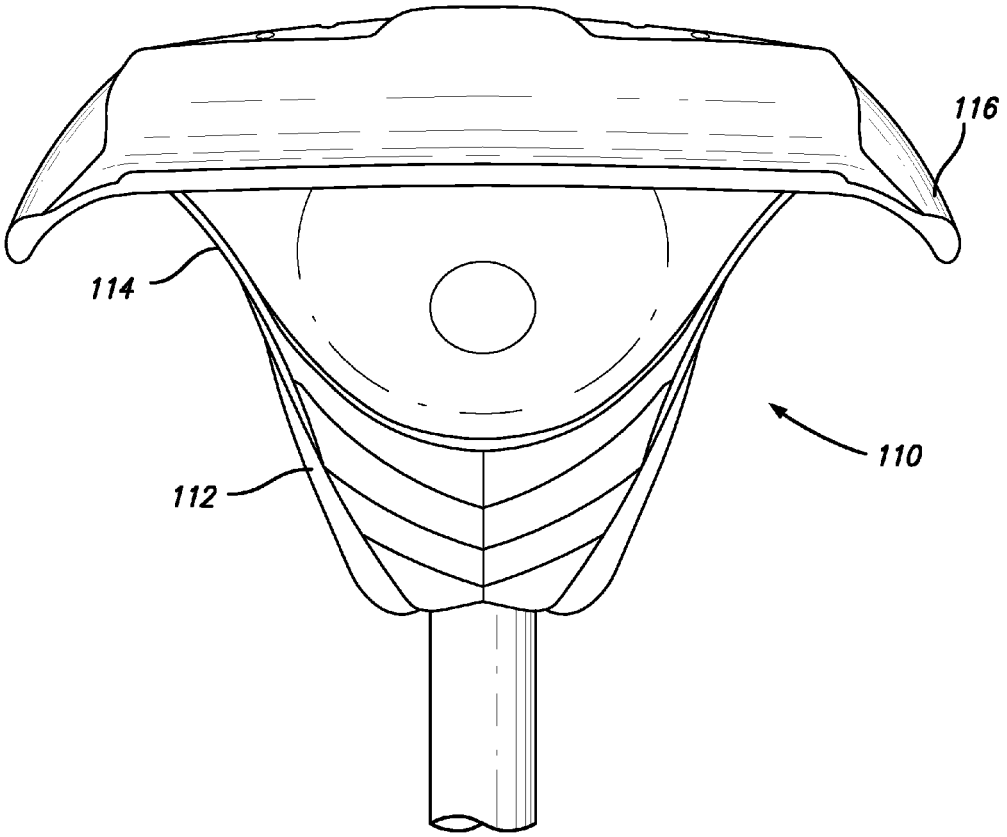

FIG. 6

PROJECTILE LAUNCHING DEVICE

CROSS-REFERENCE TO RELATED APPLICATIONS

This patent application is a continuation of and claims priority to U.S. application Ser. No. 13/343,660, filed Jan. 4, 2012, now U.S. Pat. No. 8,960,172 issued Feb. 24, 2015, which application is herein incorporated by reference in its entirety.

FIELD OF THE INVENTION

This invention relates to a projectile launching device and, more particularly, to a projectile launching device that is particularly suited for launching water balloons at an intended target.

BACKGROUND

A water balloon or water bomb is a latex rubber balloon filled with water. Because of how water balloons' latex breaks under stress, they are often thrown and launched at targets, resulting in wetness. They are commonly used in water balloon fights and for purposes of carrying out practical jokes.

Water balloons are typically thrown or lobbed by a user at an intended target. Because water balloons, by nature, have an amorphous and changing shape, it is often difficult to accurately aim and throw a water balloon and actually hit an intended target. This difficulty is compounded when the intended target is located at a distance that is outside of one's throwing range.

Various devices have been developed to allow a user to throw water balloons at greater distances and hit the intended target at greater accuracy. One such device is a water balloon sling shot, which typically comprises a soft pocket in which the water balloon is placed, and an elastic material on either sides of the pocket. The Y-shaped frame, typical of the traditional slingshots, is usually omitted so as to accommodate a variety of water balloon shapes and sizes. As a result, the operation of a water balloon slingshot may require up to three people to launch a balloon, with two people holding the two ends of the elastic material and one person to retract the pocket and water balloon.

While there are other water balloon launchers that may require only a single person for operation, they are typically rather unwieldy or expensive. For example, there are launchers that make use of compressed air to push a water balloon out of a barrel, marketed under the name "Balloon Bazooka."

BRIEF SUMMARY

The embodiments of the launching devices disclosed herein overcome many of the drawbacks of known water balloon devices. It provides ease of operation in requiring only a single operator or user to launch the water balloons, while providing greater accuracy due to the configuration of the cavity in which the water balloon is held and the configuration of the launching surface from which it is propelled. Moreover, the launching device requires a simple range of motion in order to propel the water balloon towards its intended target. This simple range of motion may be either an overhead or underhand swing movement.

In one embodiment, a launching device comprises a shaft having a first end and a second end, a head coupled to the first end of the shaft and a handle coupled to the second end of the shaft. The head comprises a cavity and a launch ramp curved both upwardly and outwardly from the cavity, wherein a distal portion of the launch ramp extends outwardly beyond the cavity in a forward launching direction. An angle is defined by the longitudinal grip axis and the distal portion of the launch ramp to direct a projectile disposed in the cavity in the forward launching direction.

In accordance with a first aspect of the embodiment, the angle is greater than or equal to 90 degrees.

In accordance with a second aspect of the embodiment, the angle is in the range of from 110 to 170 degrees.

In accordance with a third aspect of the embodiment, the launch ramp has a radius of curvature that increases from the cavity to the distal portion.

In accordance with a fourth aspect of the embodiment, a proximal portion of the launch ramp adjacent the cavity is curved and the distal portion of the launch ramp is substantially planar.

In accordance with a fifth aspect of the embodiment, the shaft is angled relative to the grip axis so as to position the head at a distance away from the grip axis in a direction opposing the forward launch direction.

In accordance with a sixth aspect of the embodiment, a rolling surface is defined by the inner surface of the cavity and the launch ramp, wherein the rolling surface is specifically adapted to allow for the smooth rolling of a water balloon, and wherein the rolling surface is devoid of any protrusions or gaps which would create friction when the water balloon is rolled thereon.

In accordance with a seventh aspect of the embodiment, a guard member disposed alongside at least the grip section of the handle. The guard member may be configured to shield an entire side of the grip section in the forward launching direction.

In accordance with an eighth aspect of the embodiment, the launch ramp further includes a plurality of apertures.

In accordance with a ninth aspect of the embodiment, the launching device further comprises a looped member disposed on the handle.

In accordance with a tenth aspect of the embodiment, the cavity of the launching device is a pocket comprising walls that encircle a water balloon disposed therein.

In another embodiment, a launching device comprises a shaft having a first end and a second end, a head coupled to the first end of the shaft, and a handle coupled to the second end of the shaft. The head comprises a cavity and a curved launch ramp extending from the cavity and outwardly toward a forward launching direction. The handle comprises a grip section. The head is displaced at a distance away from the grip axis and in a direction opposing the launching direction.

In accordance with a first aspect of the embodiment, the cavity comprises an inner surface which is substantially smooth and devoid of any sharp edges.

In accordance with a second aspect of the embodiment, a rolling surface is defined by the inner surface of the cavity and the launch ramp, wherein the rolling surface is specifically adapted to allow for the smooth rolling of a water balloon, and wherein the rolling surface is devoid of any protrusions or gaps which would create friction when the water balloon is rolled thereon.

In accordance with a third aspect of the embodiment, the launch ramp has a radius of curvature that increases from the cavity to the distal portion.

In accordance with a fourth aspect of the embodiment, the shaft further comprises a curved shaft section between the

first and second end, the curved launch ramp and the curved shaft section forming a sigmoidal curve.

In accordance with a fifth aspect of the embodiment, a guard member disposed alongside at least the grip section of the handle. The guard member may be configured to shield an entire side of the grip section in the forward launching direction.

In accordance with a sixth aspect of the embodiment, the launch ramp further includes a plurality of apertures.

In accordance with a seventh aspect of the embodiment, a looped member is disposed on the handle.

Other objects, features and advantages of the present invention will become apparent to those skilled in the art from the following detailed description.

BRIEF DESCRIPTION OF THE DRAWINGS

Illustrative embodiments of the present invention are described herein with reference to the accompanying drawings, in which:

FIG. **1** is a perspective view of an embodiment of the launching device;

FIG. **2** is a front view of the launching device of FIG. **1**;

FIG. **3** is a rear view of the launching device of FIG. **1**;

FIG. **4** is a side view of the launching device of FIG. **1**;

FIG. **5** is a perspective view of the head section of an embodiment of the launching device; and

FIG. **6** is a top down view of the head section of the launching device of FIG. **5**.

Like numerals refer to like parts throughout the several views of the drawings.

DETAILED DESCRIPTION OF THE PREFERRED EMBODIMENTS

The embodiments of the launching device disclosed herein are designed to permit a single user to launch a projectile at an intended target. Various features of the launching device shown and described herein are configured to optimize both the accuracy, speed and distance with which a projectile, particularly a water balloon, is launched. While the launching device may be used to launch projectiles of a variety of sizes, dimensions, and weights, the launching device is specifically configured to be used in connection with launching water balloons.

Water balloons have certain features which make it particularly difficult to accurately hit an intended target that is located at a large distance away from the source. Water balloons, by their very nature, do not have a fixed shape may be rather amorphous. As a result, it is often difficult to be able to handle water balloons using one's own hands and throw them to hit an intended target, particularly when the water balloon must travel a large distance to reach the intended target.

In addition, water balloons are typically constructed from a thinner latex material to promote rupture upon impact. Thus, due to their fragile nature, water balloons are prone to rupturing prematurely, especially if it is not handled appropriately.

The launching devices disclosed here are specifically configured to prevent premature rupture of the water balloons while at the same time allowing the water balloons to be launched at a distance and speed greater than would be achieved by hand throwing.

FIGS. **1-4** depict an embodiment of the launching device comprising a head section **110**, an elongated shaft **120** and a handle **130**. The head section **110** comprises a cavity **112** which is configured and shaped to hold a water balloon (not depicted).

In one embodiment, the cavity **112** is an open pocket having walls that surround at least a portion, if not the entirety, of the water balloon. Preferably, the cavity **112** is configured such that in an upright position, the water balloon is maintained securely within the cavity **112**. The cavity **112** may also have a curved or rounded surface without any sharp angles.

A launching ramp **114** extends both upwardly and outwardly along a launch axis which begins from the cavity and terminates in a distal portion **116** of the head section **110**. The lateral or side surface of the launching ramp **114** may optionally be curved so as to maintain the water balloon along the launch axis. The launching ramp **114** may include a plurality of apertures **118** which reduces the drag or air resistance of the launching device as it is set into motion. The elongated shaft **120** comprises a first end coupled to the head section **110** and a second end that is coupled to the handle **130**. The handle **130** generally comprises a grip section **132** having a longitudinal axis A-A (shown in FIG. **4**). The handle **130** may optionally include a string loop **134** and guard member **136** to protect the user's hand when in use.

In operation, a user may grasp the grip section **132** of the launching device with the head section **110** pointing upward. A water balloon or other projectile may be loaded into the cavity **112** and the water balloon may be launched out of the cavity by a forward rotational motion of the launching device, culminating in an abrupt stop or a flicking motion in a launching direction, as depicted in FIG. **4**. The faster the forward rotational motion, the greater the velocity and distance traveled by the water balloon.

The launching device is configured so as to avoid premature rupture of the water balloon. In accordance with one embodiment, the surfaces contacting the water balloon during storage and launch are preferably smooth surfaces curved surfaces, devoid of sharp angles, edges or protrusions which may cause friction with the rolling of the water balloon.

As shown in FIGS. **5-6**, the head section **110** of the launching device comprises a cavity **112** which has a surrounding side wall and a bottom portion, thereby allowing for a water balloon to be seated securely within the cavity **112** when the launching device is held in an upright position as depicted in FIGS. **1-4**.

A rolling surface is defined by the inner surface of the cavity **112** and the launch ramp **114**. As shown in FIGS. **1-6**, the launch ramp **114** is curved both upwardly and outwardly from the cavity **112** wherein a distal portion of the launch ramp extends outwardly beyond the cavity in a forward launching direction (see FIG. **4**) along a launch axis. The rolling surface is specifically adapted to allow for the smooth rolling of the water balloon and the entirety of the rolling surface, again is devoid of sharp angles, edges or protrusions which would create friction when the water balloon is rolled thereon. While the rolling surface may include a plurality of apertures **118** to reduce wind resistance when the launching device is used, these apertures **118** are sufficiently small in size so as to not create significant friction. In a preferred embodiment, the largest diameter of the apertures is not greater than 10 mm, and preferably not greater than 5 mm.

The launching device is specifically configured to allow a user to accurately hit a target with a water balloon. Accordingly, the design of the launching device is not constrained

so as to allow for the reciprocal "catching" of a projectile, although such may be accomplished.

As shown in FIG. **1-6**, the distal portion **116** of the launch ramp **114** extends outwardly beyond the cavity **112** in a forward launching direction. While this may not be an optimal configuration for catching projectiles, it allows for a user to more accurately aim the water balloon at an intended target. In one embodiment, an angle θ is defined by the grip axis A-A and the distal portion **116** of the launch ramp **114** along axis B-B. In a preferred embodiment, the angle is greater than or equal to 90 degrees. In another preferred embodiment, the angle is in the range of from 110 to 170 degrees. In orienting the distal portion **116** of the launch ramp **114** relative to the grip axis A-A, the distal portion is configured so as to orient the exiting water balloon in a forward direction. In a preferred embodiment, proximal portion of the launch ramp **114** adjacent the cavity **112** is curved and the distal portion **116** has a substantially planar portion which defines the axis B-B from which the angle θ may be determined. In another preferred embodiment, the launch ramp **114** has a radius of curvature along its surface that increases from the proximal portion to the distal portion.

The launch device is also configured so as to maximize the speed at which the water balloon may be launched. To that end, the cavity **112** may be configured to be located at a distance away from the grip axis A-A and in a direction opposing the launching direction (see FIG. **4**). In one preferred embodiment, the shaft **120** may comprise a curved shaft section between the first and second end such that the curved launch ramp and the curved shaft section form a sigmoidal curve. Such a configuration has the effect of increasing the distance and thus the angular momentum of the water balloon as it is thrown by the user. The angular momentum may further be increased by providing a longer shaft **130**.

It is to be understood that the detailed description and specific examples, while indicating preferred embodiments of the present invention, are given by way of illustration and not limitation. Many changes and modifications within the scope of the present invention may be made without departing from the spirit thereof, and the invention includes all such modifications.

What is claimed is:

1. A water balloon launching device comprising a handle extending longitudinally a length from an end to a head, the head comprising a cavity section for retaining a water balloon therein and a ramp section extending from the cavity section for guiding water balloon movement outwardly from the cavity section when the handle is moved in a forward-directed rotational movement, the ramp section comprising a first section extending from the cavity a distance to a second section that extends to a distal end of the ramp section, wherein the distal end of the ramp is configured having a width that is substantially planar in configuration.

2. The device as recited in claim **1** wherein the handle comprises a grip having a longitudinal grip axis.

3. The device as recited in claim **2** wherein an angle is defined by the grip axis and the distal end of the ramp section.

4. The device as recited in claim **1** wherein the second section of the ramp section comprises on or more openings extending therethrough.

5. The device as recited in claim **1** wherein the cavity section is configured to hold a water balloon therein when the handle is held in an upright position.

6. The device as recited in claim **1** wherein the ramp section has a curved configuration so as to make contact with a partial diameter of the water balloon during a lunch movement to guide the water balloon along the ramp section during a launch movement.

7. A launching device for holding and launching a water balloon by forward rotational movement by a user, the device comprising:

a cavity configured for retaining a water balloon therein when in a prelaunch condition;

a handle extending longitudinally away from a first end of the cavity and including a grip section disposed therealong; and

a ramp extending from the cavity and configured to guide water balloon movement outwardly from the cavity therealong during a lunch movement of the handle, wherein a distal end of the ramp is configured having a width that is substantially planar in configuration.

8. The device as recited in claim **7** wherein at least a section of the ramp is curved to contact a partial diameter of the water balloon during a lunch movement.

9. The device as recited in claim **7** wherein an angle is defined by a longitudinal axis along the grip and a distal end of the ramp.

10. The device as recited in claim **9** wherein the angle is greater than about 90 degrees.

11. The device as recited in claim **7** wherein the cavity includes a front section that partially covers a forward surface of a water balloon opposite the ramp when disposed therein.

12. A method for launching a water balloon comprising the steps of:

placing a water balloon in a cavity of a launching device comprising a handle extending longitudinally therefrom and a ramp extending outwardly from the handle, the ramp configured having an approximated radius of curvature along a ramp distal end that is different from an approximated radius adjacent the cavity; and

moving the handle in a forward rotational movement to cause the water balloon to move from the cavity along the ramp so that it is launched therefrom upon passing the ramp distal end.

13. The method as recited in claim **12** wherein during the step of moving, the handle is held along a grip by a user, and the grip has a longitudinal axis at an angle to an axis extending along the ramp distal end, wherein the angle is greater than 90 degrees.

14. The method as recited in claim **12** wherein during the step of placing, the device us held in an upright position with the handle extending vertically downwardly away from the cavity.

15. The method as recited in claim **12** wherein during the step of moving, at least a portion of the water balloon diameter is in contact with wall surfaces of the ramp to guide the water balloon prior to launching.

16. The method as recited in claim **12** wherein during the step of moving, the water balloon passes along one or more openings extending through the ramp.

17. The method as recited in claim **12** wherein the approximated radius of curvature along a ramp distal end that greater than the approximated radius adjacent the cavity.

* * * * *