US00D662894S

(12) **United States Design Patent**
Lassen

(10) **Patent No.: US D662,894 S**
(45) **Date of Patent: ** Jul. 3, 2012**

(54) **PORT PROTECTOR ASSEMBLY FOR D-SUB CONNECTORS**

(75) Inventor: **David Lassen**, Arnold, MD (US)

(73) Assignee: **The United States of America as represented by the Director of the National Security Agency**, Washington, DC (US)

(**) Term: **14 Years**

(21) Appl. No.: **29/349,153**

(22) Filed: **Feb. 24, 2010**

(51) **LOC (9) Cl.** **13-03**

(52) **U.S. Cl.** **D13/154**

(58) **Field of Classification Search** D13/133, D13/147, 154, 156, 184, 199; 439/79, 135–136, 439/142, 144, 146–147, 180, 246, 252, 278, 439/374, 378–381, 527, 529, 533, 530, 892, 439/894

See application file for complete search history.

(56) **References Cited**

U.S. PATENT DOCUMENTS

3,417,213	A	*	12/1968	Bryant	200/51 R
D274,719	S	*	7/1984	Casciotti et al.	D13/147
D275,850	S	*	10/1984	Wilson	D13/147
D411,513	S	*	6/1999	Wu et al.	D13/147
D414,162	S	*	9/1999	Huang	D13/147
D488,132	S	*	4/2004	Tanaka	D13/147
D558,680	S	*	1/2008	Chen et al.	D13/154
D568,251	S	*	5/2008	Chen et al.	D13/147
2004/0093363	A1	*	5/2004	Cargin et al.	708/131
2005/0118873	A1	*	6/2005	Ruff et al.	439/610
2008/0188139	A1	*	8/2008	Poulin et al.	439/686

* cited by examiner

Primary Examiner — Daniel Bui
(74) *Attorney, Agent, or Firm* — Roshni Kurian

(57) **CLAIM**

The ornamental design for a port protector assembly for D-sub connectors, as shown and described.

DESCRIPTION

FIG. **1** is an exploded perspective view of a port protector for D-sub connectors showing my new design;
FIG. **2** is a right side elevation view thereof;
FIG. **3** is a left side elevation view thereof;
FIG. **4** is a top plan view thereof; and,
FIG. **5** is a bottom plan view thereof.

1 Claim, 5 Drawing Sheets

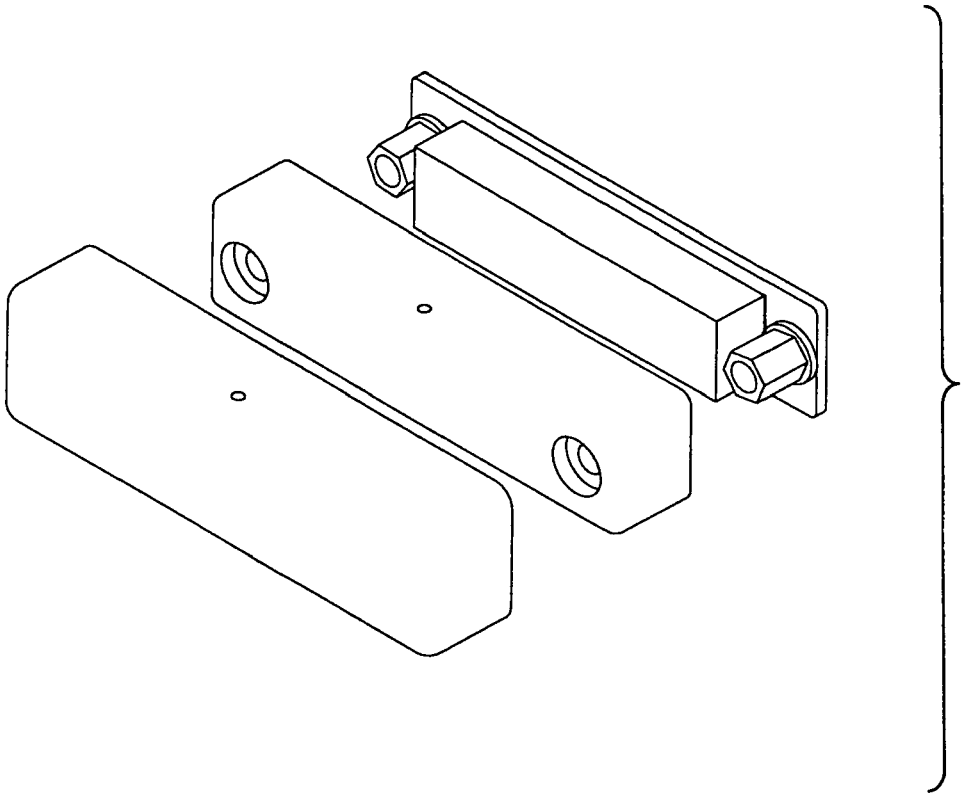

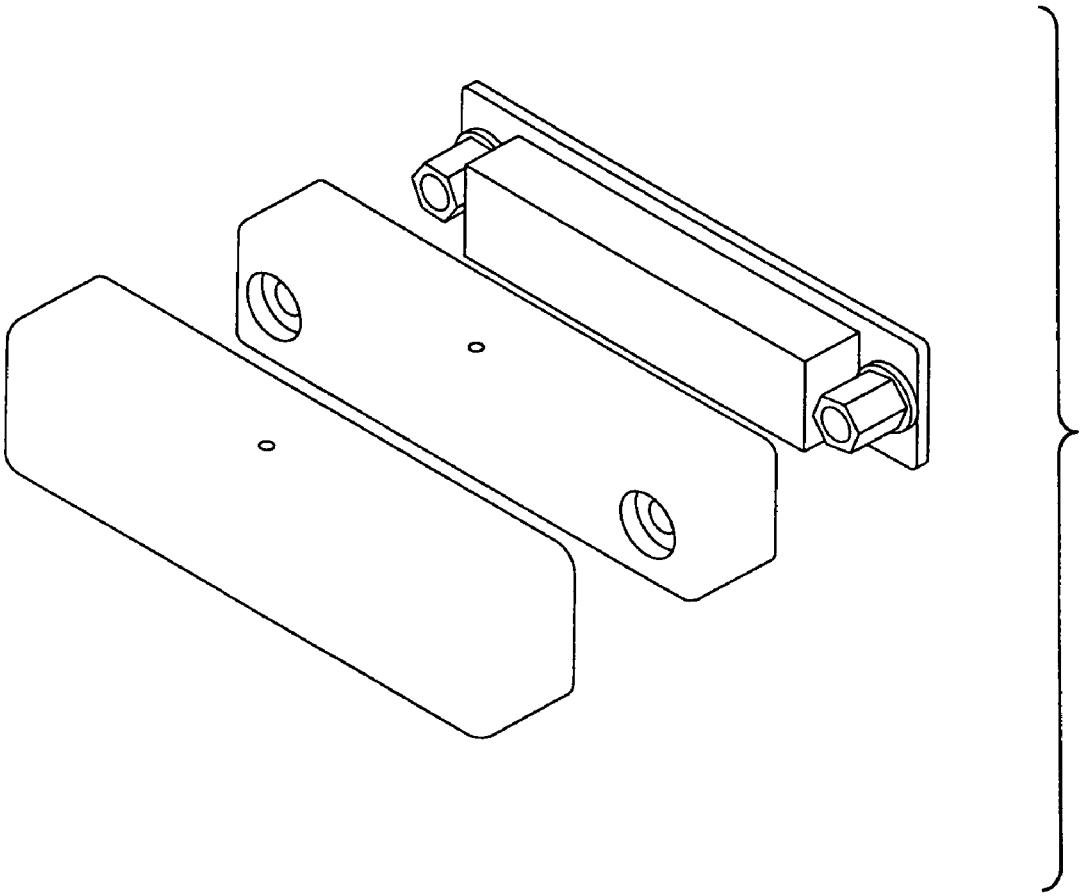

FIG. 1

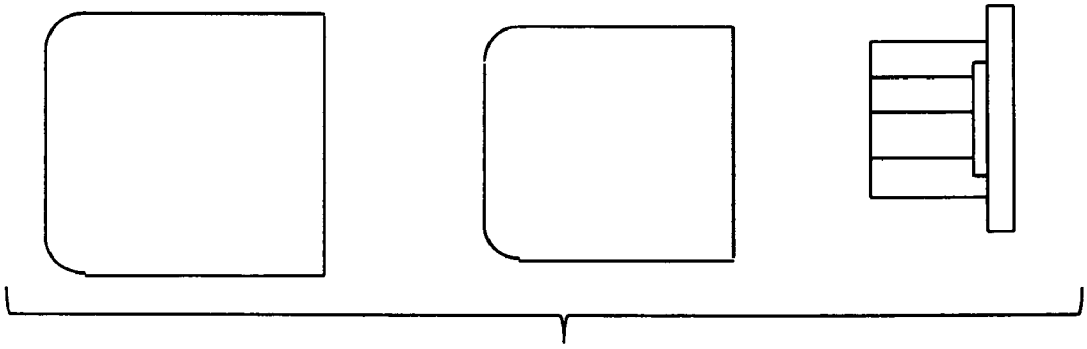

FIG. 2

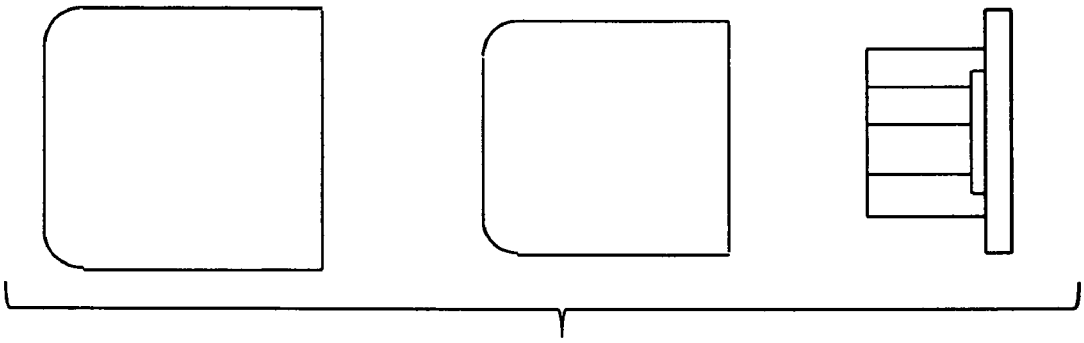

FIG. 3

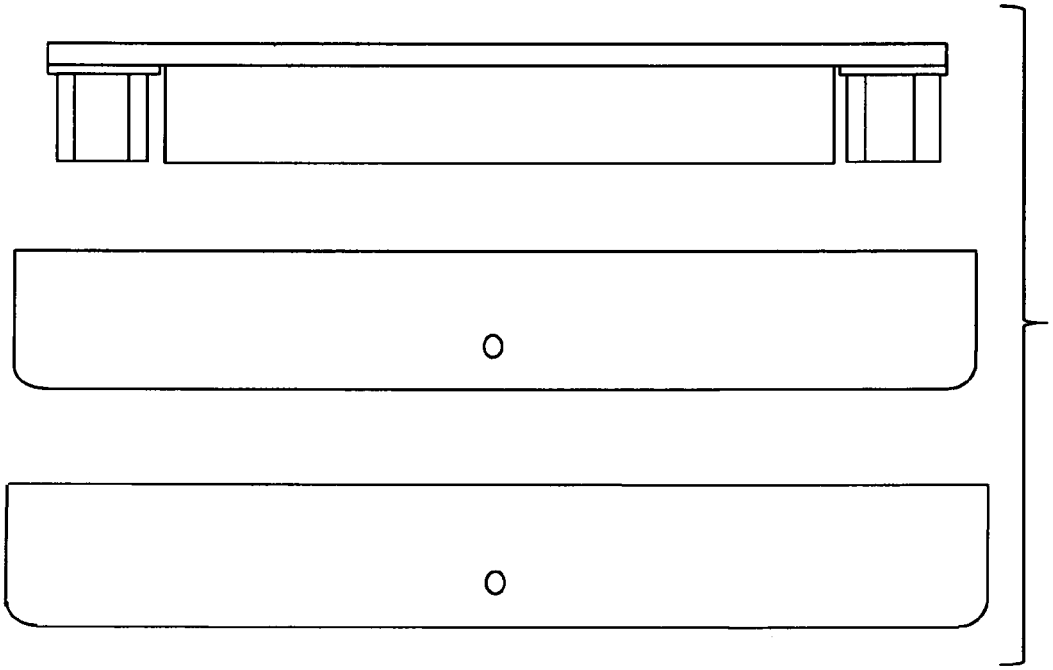

FIG. 4

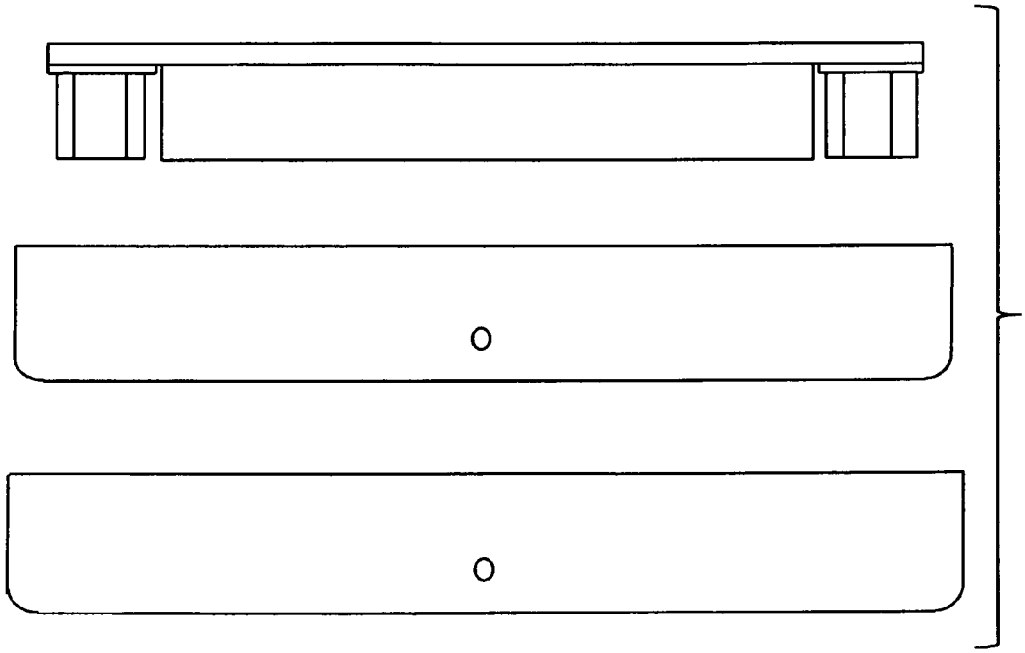

FIG. 5