US009333894B1

(12) **United States Patent**
Hunting, Sr.

(10) **Patent No.: US 9,333,894 B1**
(45) **Date of Patent: May 10, 2016**

(54) **TRUCK BED PROTECTOR**

(71) Applicant: **Robert L. Hunting, Sr.**, Elk Grove, CA (US)

(72) Inventor: **Robert L. Hunting, Sr.**, Elk Grove, CA (US)

(*) Notice: Subject to any disclaimer, the term of this patent is extended or adjusted under 35 U.S.C. 154(b) by 0 days.

(21) Appl. No.: **14/722,598**

(22) Filed: **May 27, 2015**

Related U.S. Application Data

(60) Provisional application No. 62/038,555, filed on Aug. 18, 2014.

(51) **Int. Cl.**

B60P 7/04	(2006.01)
B60J 11/02	(2006.01)
B60J 7/08	(2006.01)
B60R 13/00	(2006.01)
B60J 11/06	(2006.01)

(52) **U.S. Cl.**
CPC .. ***B60P 7/04*** (2013.01); ***B60J 7/085*** (2013.01); ***B60J 11/025*** (2013.01); ***B60J 11/06*** (2013.01); ***B60R 13/00*** (2013.01)

(58) **Field of Classification Search**
CPC B60J 7/085; B60J 7/10; B60J 7/102; B60J 11/02; B60J 11/025; B60J 11/06; B60P 7/04; B60R 13/01
USPC 296/39.2, 98, 100.01, 100.11, 100.16, 296/136.01, 136.03, 136.1
See application file for complete search history.

(56) **References Cited**

U.S. PATENT DOCUMENTS

4,997,227	A	3/1991	Falzone et al.	
5,400,813	A *	3/1995	Swan, Jr.	E04H 15/08 135/119
5,542,733	A	8/1996	Kintz	
5,636,883	A	6/1997	Johns	
5,788,307	A	8/1998	Gilbert	
5,944,375	A	8/1999	Schenk et al.	
6,073,964	A	6/2000	Smith	
6,106,050	A	8/2000	McLeod	
6,296,279	B1	10/2001	Stoddard et al.	
6,783,169	B1	8/2004	Marx et al.	
7,695,047	B2 *	4/2010	Kohlstrand	B60J 7/067 296/100.01
2002/0005654	A1 *	1/2002	Kolper	B60P 7/04 296/136.1
2002/0038962	A1 *	4/2002	Perez	B60J 7/102 296/136.07

FOREIGN PATENT DOCUMENTS

GB	1114344 A *	5/1968		B60J 11/02

* cited by examiner

Primary Examiner — Jason S Daniels
(74) *Attorney, Agent, or Firm* — Robert C. Montgomery; Montomery Patent and Design LLC

(57) **ABSTRACT**

A truck bed protector utilizes protective coverings and attachment brackets enabling installation within a truck bed. The protective coverings can be arranged in a variety of ways in order to protect either the inside of the truck or the outside. Further, with use of tent posts, the protective coverings can be used as a tent or as protection from the sun. The protective coverings can also be joined to cover cargo or be used for advertising purposes when covering the outside of the truck.

14 Claims, 4 Drawing Sheets

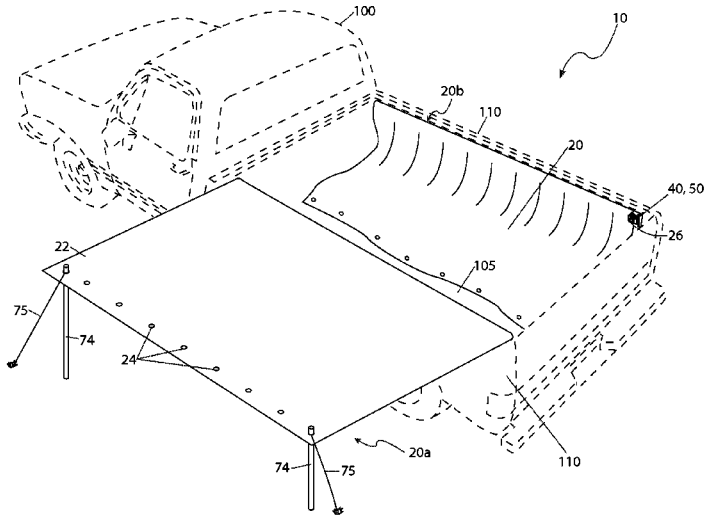

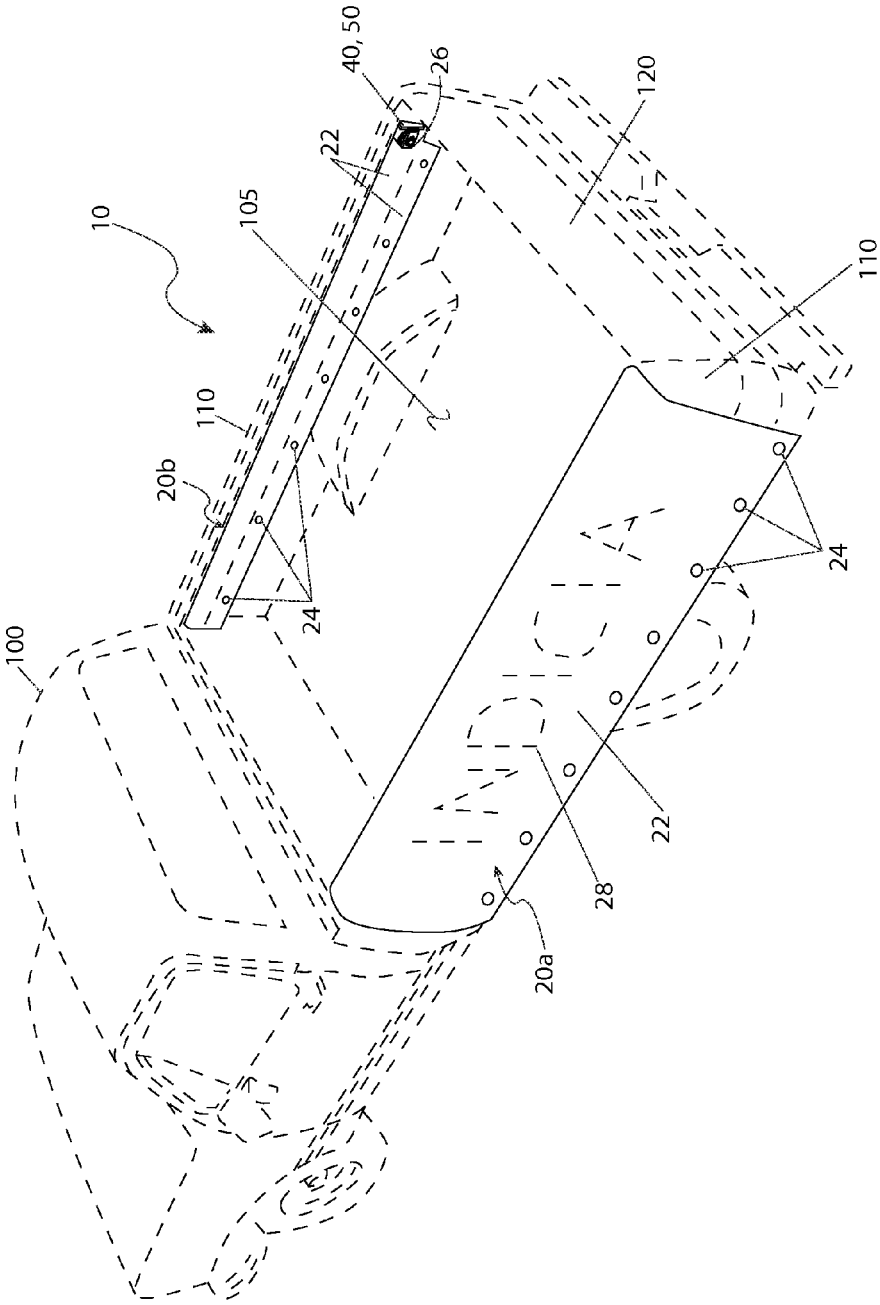

Fig. 1

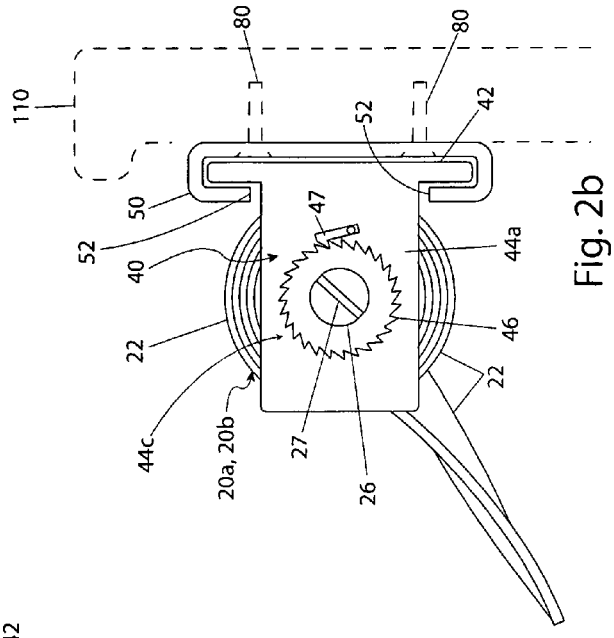
110
80
80
52
42
50
52
47
40
44a
22
46
22
44c
20a, 20b
27
26

Fig. 2b

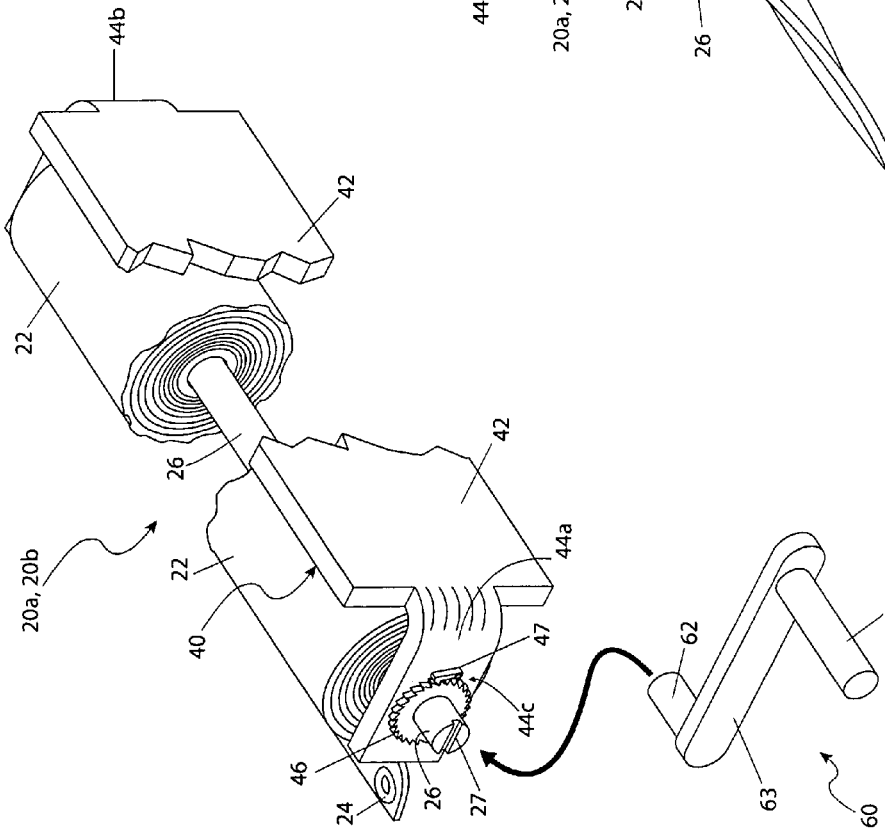
44b
42
22
26
42
20a, 20b
22
44a
40
47
44c
46
26
27
24
62
64
63
60

Fig. 2a

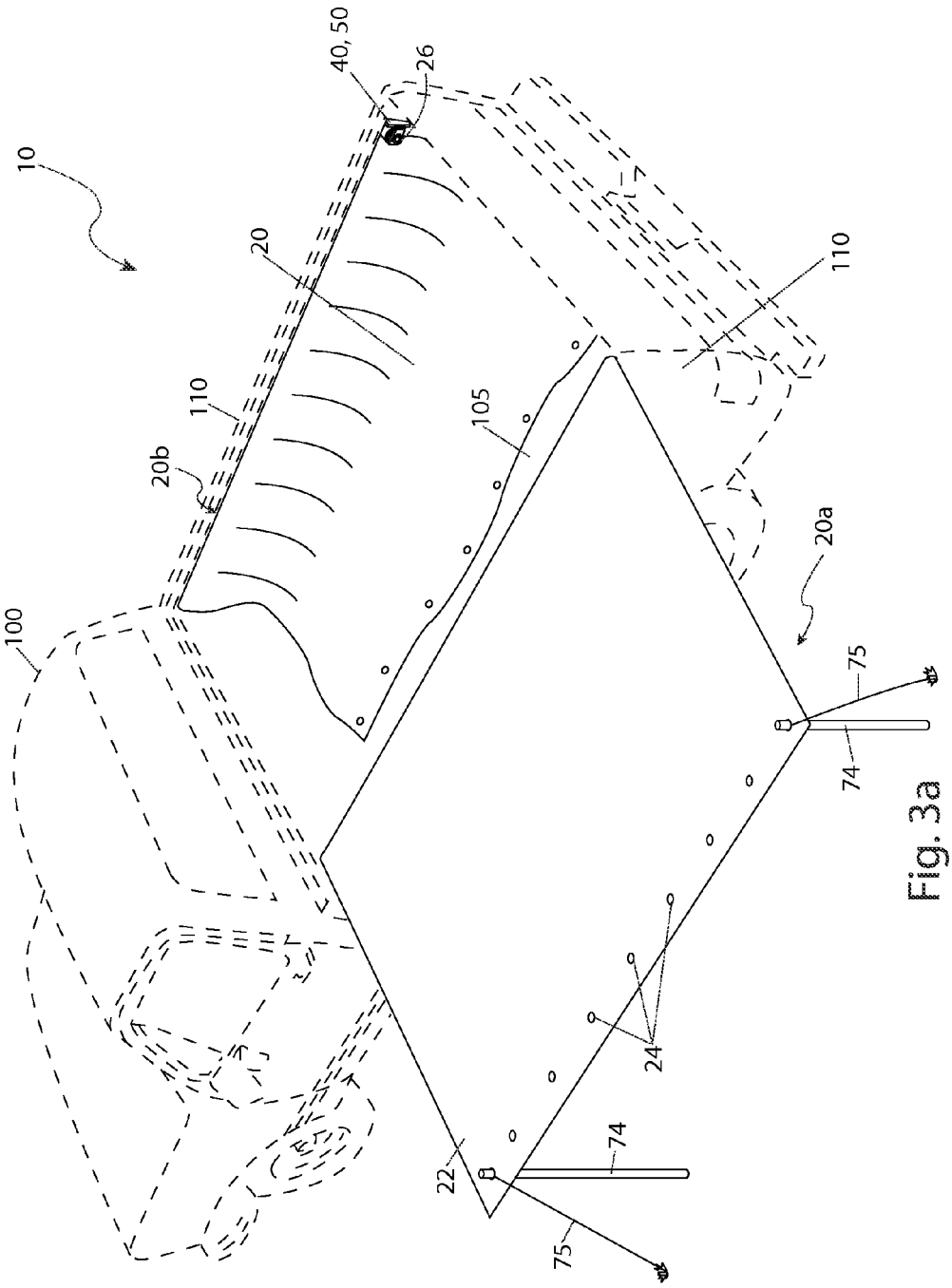

Fig. 3a

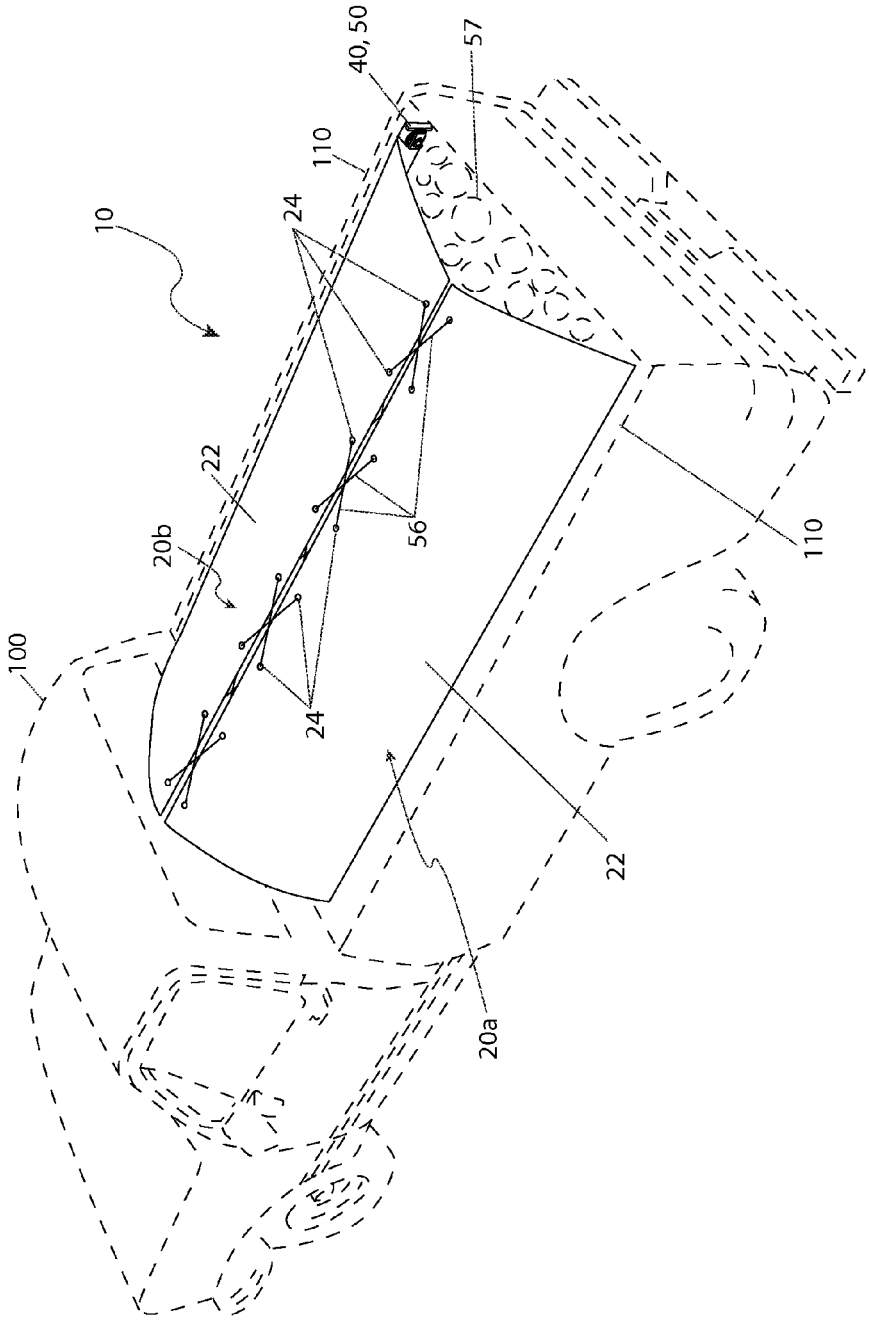

Fig. 3b

TRUCK BED PROTECTOR

RELATED APPLICATIONS

The present invention was first described in and claims the benefit of U.S. Provisional Application No. 62/038,555, filed Aug. 18, 2014, the entire disclosures of which are incorporated herein by reference.

FIELD OF THE INVENTION

The present invention relates generally to a protective covering that can be arranged in a variety of ways in order to protect either the inside or the outside of the truck.

BACKGROUND OF THE INVENTION

With sales at an all-time high, the popularity of the pickup style truck as an everyday vehicle is more widespread ever. The pickup truck's utility and convenience in hauling items coupled with the availability of luxury interiors and extended cab space have made the pickup a popular alternative to other vehicles. The widespread availability of aftermarket accessories also enhances the attractiveness of pickup trucks. Perhaps one (1) of the most common accessories is that of a truck bed cap. Such an accessory both covers and protects the contents of the bed area from weather elements and theft. While a truck bed cap provides a significant amount of added value, there are still occasions when the functionality of an open bed pickup truck is needed. When an open bed pickup truck is needed oftentimes the bed will be fitted with a bed cover.

However, bed covers are not without drawbacks. For instance, the pickup truck bed cover does little to nothing to protect the sides of the pickup truck. Also, there are times when the volume of the pickup truck bed is inadequate to carry the desired load even though the truck's weight limit has not been exceeded. When truck bed volume is an issue it often presents when the pickup truck will be used for carrying loads such as leaves, grass clippings or mulch. While it may be a personal irritant to have a portion of the truck's load blow out of the truck while in transit under many circumstances such load transportation is also against state law. Depending on the circumstance, a person operating a vehicle with an unsecured load may be subject to civil and criminal penalties for anything from littering to creating a hazardous travel condition. Accordingly, there exists a need for a means by which a pickup truck bed cover can be modified to address these concerns. The use of the truck bed protector provides for multiple modes of protection for the bed area and load securing of a given pickup truck in a manner that is quick, easy and effective.

SUMMARY OF THE INVENTION

The inventor has recognized the aforementioned issues and inherent problems and observed that there is a need for a truck bed protector.

It is therefore an object of the invention to provide a truck bed liner comprising a frame assembly capable of being removably attached to an interior side of a bed of a truck via at least a pair of brackets. There is a textile panel which has a proximal end mounted to the frame assembly and an opposing distal edge. The textile panel is disposed in a rolled configuration when not deployed and is selectively deployed to cover the bed of the truck or an exterior side of the bed of the truck.

The liner may also comprise of at least one pole. The distal edge of the textile panel may also comprise at least a pair of grommets. Each pole has a first end configured to be inserted into an individual grommet and a second end configured to be inserted into or onto a surface. Each pole is also configured to support the distal edge of the textile panel at an elevated position above the surface.

The frame assembly also comprises a planar portion which has a pair of distal ends each slidably engaging and securable to each of the pair of brackets, a pair of end plates, each perpendicularly extending away from the pair of brackets and located at the pair of distal ends and a spindle which has a drive slot on a first end. The spindle is rotatingly attached to and spans a distance between the pair of end plates and receives the proximal end of the textile panel.

The frame assembly also comprises a ratchet gear attached to the first end of the spindle adjacent to the drive slot and a pawl attached to one (1) of the pair of end plates adjacent to the ratchet gear and in mechanical communication with the same. The ratchet gear and the pawl provide for rotational control of the spindle and the rotational control operates to permit or arrest deployment of the textile panel.

The frame assembly also comprises a windup tool capable of engaging the drive slot to selectively wind the textile panel about an axis of the spindle. Additionally, the frame assembly also comprises a windup tool capable of engaging the drive slot to selectively unwind the textile panel away from the axis of the spindle.

The liner may also comprise a first frame assembly capable of being removably attached to a first interior side of a bed of a truck via at least a first pair of brackets and a second frame assembly capable of being removably attached to a second interior side of a bed of a truck opposite the first interior side via at least a second pair of brackets. The first textile panel has a proximal end mounted to the first frame assembly and an opposing first distal edge. The second textile panel has a second proximal end mounted to the second frame assembly and an opposing second distal edge. There is also a cord, at least one pole. The first and second textile panels are disposed in a rolled configuration when not deployed. The first textile panel is selectively deployed to cover the bed of the truck or a first exterior side of the bed of the truck. The second textile panel is selectively deployed to cover the bed of the truck or a second exterior side of the bed of the truck.

The first and second frame assemblies each further comprise a planar portion, having a pair of distal ends each slidably engaging and securable to each of the respective first or second pair of brackets. Each pair of end plates perpendicularly extend away from the respective first or second pair of brackets and are located at the pair of distal ends and a spindle which has a drive slot on a first end. The spindle is rotatingly attached to and spans a distance between the pair of end plates. The spindle is capable of receiving the first proximal end of the first textile panel or the second proximal end of the second textile panel.

The first and second frame assemblies further comprise a ratchet gear attached to the first end of the spindle which is adjacent the drive slot and a pawl attached to one (1) of the pair of end plates adjacent to the ratchet gear and in mechanical communication with the same. The ratchet gear and pawl provide for rotational control of the spindle. The rotational control operates to permit or arrest deployment of the first or second textile panel.

The first and second frame assembly further comprises a windup tool capable of engaging the drive slot to selectively wind the first or second textile panel about an axis of the spindle. The first and second frame assembly further com-

prises a windup tool capable of engaging the drive slot to selectively unwind the first or second textile panel away from the axis of the spindle. The first and second textile panel's distal edge each further comprises at least a pair of grommets disposed adjacent to a perimeter thereto. Each pole has a first end configured to be inserted into an individual grommet and a second end configured to be inserted into or onto a surface. Each pole is configured to support the distal edge of the textile panel at an elevated position above the surface. The cord is capable of being routed through grommets of the first textile panel distal edge and the second textile panel distal edge, when the first and second textile panels are deployed within the bed.

BRIEF DESCRIPTION OF THE DRAWINGS

The advantages and features of the present invention will become better understood with reference to the following more detailed description and claims taken in conjunction with the accompanying drawings, in which like elements are identified with like symbols, and in which:

FIG. **1** is an environmental view of a truck bed liner and signage **10** depicting an in-use state, according to a preferred embodiment of the present invention;

FIG. **2***a* is a perspective view of a frame assembly portion **40** of the truck bed liner and signage **10**, according to a preferred embodiment of the present invention;

FIG. **2***b* is a side environmental view of the frame assembly **40**, according to a preferred embodiment of the present invention;

FIG. **3***a* is an environmental view of the truck bed liner and signage **10** depicting tent and bed liner applications, according to a preferred embodiment of the present invention; and,

FIG. **3***b* is another environmental view of the truck bed liner and signage **10** depicting a cargo **57** covering application, according to a preferred embodiment of the present invention.

DESCRIPTIVE KEY

10 truck bed liner and signage
20*a* first liner assembly
20*b* second liner assembly
22 textile panel
24 grommet
26 spindle
27 drive slot
28 indicia
40 frame assembly
42 main plate
44*a* first end plate
44*b* second end plate
44*c* spindle aperture
46 ratchet gear
47 pawl
50 mounting bracket
52 bracket slot
56 cord
57 cargo
60 windup tool
62 socket
63 crank
64 handle
74 pole
75 guy wire
80 fastener
100 truck
105 bed
110 bedside
120 tailgate

The best mode for carrying out the invention is presented in terms of its preferred embodiment, herein depicted within FIGS. **1** through **3***b*. However, the invention is not limited to the described embodiment, and a person skilled in the art will appreciate that many other embodiments of the invention are possible without deviating from the basic concept of the invention and that any such work around will also fall under scope of this invention. It is envisioned that other styles and configurations of the present invention can be easily incorporated into the teachings of the present invention, and only one particular configuration shall be shown and described for purposes of clarity and disclosure and not by way of limitation of scope.

The terms "a" and "an" herein do not denote a limitation of quantity, but rather denote the presence of at least one of the referenced items.

The present invention describes a truck bed liner and signage (herein described as the "apparatus") **10**, which provides a protective covering system for bed **105** and bedside **110** areas of a truck **100** as well as providing multiple uses. The apparatus **10** includes a pair of rectangular textile panel portions **22** removably attached to opposing interior sides of bedside portions **110** of the truck **100**, being mounted thereto using frame assembly **40** and channel-shaped mounting brackets **50**. The textile panels **22** may be used to protect bed **105** and bedside **110** portions of the truck **100** as well as meet in the middle of the truck bed **105** to cover and protect carried cargo **57**.

Referring now to FIGS. **1**, **3***a*, and **3***b*, environmental views of the apparatus **10** depicting in-use states, according to a preferred embodiment of the present invention, are disclosed. The apparatus **10** is shown here mounted to a pickup-type truck **100**, having a first liner assembly **20***a* and a second liner assembly **20***b* which are removably attached to respective bedside portions **110** of the truck **100** via channel-type brackets **50** (see FIGS. **2***a* and **2***b*). The brackets **50** are to be permanently installed upon opposing inner surfaces of the bedside portions **110**. The liner assemblies **20***a*, **20***b* and brackets **50** are envisioned to be introduced in different lengths to match lengths of standard pickup truck beds **105**.

The apparatus **10** may be utilized to perform various useful tasks, and is not limited to the example applications illustrated here, and as such should not be interpreted as a limiting factor of the invention.

The apparatus **10**, as illustrated in FIG. **1**, may be utilized to provide protection to external surfaces of the bedsides **110** during loading and unloading of cargo **57**, as well as protect from damage due to incidental contact against the bedsides **110** by equipment, personnel, building materials, and the like. The textile panels **22** are envisioned being made of a durable and weather-resistant textile materials such as canvas, fiber impregnated vinyl, or the like, and to be introduced having a variety of printed or otherwise applied colors and patterns upon at least one (1) side surface. In this configuration, the apparatus **10** may also be utilized to display signage using various indicia **28** being printed or otherwise applied to the textile panel portions **22**. The indicia **28** may provide script or logos based upon a user's preference and may include images such as, but not limited to: personal or corporate advertising, sports names/logos, personal names, symbols, pictures, and the like, to further customize the apparatus **10**.

The apparatus **10** is shown in FIG. **3***a* having a first liner assembly portion **20***a* being utilized as a sun shading means similar to a tent, having a proximal edge portion being

mounted to the bedside **110** of the truck **100**, and an extended distal edge portion being supported above a ground surface by inserting pole portions **74** into grommet portions **24** of the textile panel **22** located at corner areas of the distal edge. The poles **74** are then secured upon the ground surface in a vertical manner using guy wires **75**. The second liner assembly **20***b* is shown here having a textile panel portion **22** positioned upon a bed portion **105** of the truck **100** to provide protection of the bed **105** from cargo **57** or abrasive materials such as stone, gravel, or the like.

The apparatus **10** is shown in FIG. **3***b* utilizing the textile panel portions **22** of respective first **20***a* and second **20***b* liner assemblies to cover a load of cargo **57** and joined along adjacent extended edges by routing a length of cord **56**, such as rope, through respective grommet portions **24**.

Referring now to FIGS. **2***a* and **2***b*, perspective and side views of a frame assembly portion **40** of the apparatus **10**, according to a preferred embodiment of the present invention, are disclosed. The liner assemblies **20***a*, **20***b* are to be exact mirror-images of each other, therefore only the second liner assembly **20***b* is illustrated in FIGS. **2***a* and **2***b* for simplicity sake.

Each liner assembly **20***a*, **20***b* provides equipment enabling mounting to the bedsides **110** and for rolling up respective textile panel portions **22** into a compact cylindrical format. The liner assemblies **20***a*, **20***b* and respective textile panels **22** may remain affixed to the bedsides **110** for temporary storage, or may be removed from the truck **100** entirely if desired.

Each liner assembly **20***a*, **20***b* further includes a spindle **26**, a frame assembly **40**, a ratchet gear **46**, and a windup tool **60**. The liner assemblies **20***a*, **20***b* are affixed to the bedside portion **110** of the truck **100** using a channel-shaped bracket **50** which slidingly receives the frame assembly **40** within. The frame assembly **40** provides a "U"-shaped structure which rotatingly supports a spindle **26** onto which the textile panel **22** is attached and wound. The frame assembly **40** includes a rectangular main plate **42** which extends the width of the textile panel **22**. Each main plate **42** further includes perpendicularly extending first end plate **44***a* and second end plate **44***b* portions located at respective opposing ends. The end plates **44***a*, **44***b* each include an axially aligned spindle aperture **44***c* into which the rod-like spindle portion **26** is positioned, thereby allowing the textile panel **22** to be wound into a compact cylindrical form as the spindle **26** is rotated.

The channel-shaped bracket **50** preferably extends the length of each bedside **110** being affixed thereto using a plurality of fasteners **80** such as screws or bolts although shorter embodiments fall under the scope of the invention. The bracket **50** provides an open end portion being sized to slidingly receive the main plate portion **42** of the frame assembly **40** in a removably attached manner. The bracket **50** further includes a bracket slot **52** along an entire inwardly facing side surface which allows the narrow end plate portions **44***a*, **44***b* of the frame assembly **40** to extend inwardly toward the bed **105** of the truck **100** to support the spindle **26** and textile panel **22**. It is envisioned that either or both of the liner assemblies **20***a*, **20***b* may be quickly removed from the truck **100** by lowering a tailgate portion **120** of the truck **100** and slidingly removing the frame assembly **40** from the bracket **50**.

The frame assembly **40** provides a means to rotate the spindle **26** and wind up the textile panel **22** via a windup tool **60** which engages a drive slot portion **27** formed in a rearward end of the spindle **26**, and a ratchet gear **46** and pawl **47** combination which controls rotation of the spindle **26**. The windup tool **60** provides a unitary "Z"-shaped weldment including a socket **62**, a crank **63**, and a cylindrical handle **64**. The socket portion **62** includes an inner mating male feature which engages the drive slot portion **27** of the spindle **26**, allowing a user to rotate the windup tool **60** to gather the textile panel **22** upon the spindle **26**. The drive slot portion **27** of the spindle **26** may also be rotated using a screw driver or similar tool if necessary. The spindle **26** includes an integral ratchet gear **46**, located adjacent to the drive slot **27**, which engages a pawl **47** mounted to the first end plate **44***a*. The ratchet gear **46** and pawl **47** control extension of the textile panel **22**, thereby allowing a user to retain the textile panel **22** in a wound format, or in an extended taut condition when being used to cover cargo **57** (see FIG. **3***b*).

It is envisioned that other styles and configurations of the present invention can be easily incorporated into the teachings of the present invention, and only one particular configuration shall be shown and described for purposes of clarity and disclosure and not by way of limitation of scope.

The preferred embodiment of the present invention can be utilized by the common user in a simple and effortless manner with little or no training. After initial purchase or acquisition of the apparatus **10**, it would be installed as indicated in FIGS. **1** and **2***b*.

The method of installing the apparatus **10** may be achieved by performing the following steps: procuring a model of the apparatus **10** having liner assemblies **20***a*, **20***b* of a particular length which matches an intended truck **100**, and also having a desired color and/or indicia **28** portions; lowering the tailgate portion **120** of the truck **100**; installing the brackets **50** upon inwardly-facing surfaces of each bedside portion **110** using a plurality of fasteners **80**; inserting the main plate portions **42** of each frame assembly **40** into the channel-shaped brackets **50** until fully engaged, so as to position the ratchet gear **46** and pawl **47** portions at a rearward location; and, closing the tailgate **120**. The apparatus **10** is now ready for use.

It is envisioned that either or both of the liner assemblies **20***a*, **20***b* may be removed from the truck **100** as desired by lowering a tailgate portion **120** of the truck **100** and slidingly removing the frame assembly **40** from the bracket **50**.

Methods for utilizing the apparatus **10** to protect portions of the truck **100** as well as perform a variety of tasks may be achieved as follows: extending and draping one (1) or both of the textile panels **22** over respective external surfaces of the bedsides **110** to provide protection to external surfaces during loading and unloading of cargo, as well as from damage due to incidental contact against the bedsides **110** by equipment, personnel, building materials, and the like; or, draping the textile panels **22** over the bedsides **110** to display signage printed thereon including specific indicia **28**, script, or logos based upon a user's preference; or, extending and utilizing one (1) or both of the textile panels **22** outwardly from the truck **100** to act as a tent or sun shading device; supporting the textile panels **22** above the ground by inserting pole portions **74** into grommets **24** located at corner areas; securing the poles **74** to a ground surface using guy wires **75**; protecting one's self from direct sunlight or inclement weather by occupying an area under the textile panel **22**; or, extending and laying one (1) or both of the textile panels **22** upon a bed portion **105** of the truck **100** to provide protection of the bed **105** from damage caused by cargo **57** or abrasive materials; or, utilizing the textile panels **22** to cover a load of cargo **57** by extending both textile panels **22** inwardly; joining both adjacent extended edges using methods such as routing a length of cord **56** such as rope through grommets **24** located along the edge; pulling the textile panels **22** taut upon the cargo **57** by engaging the socket portion **62** of the windup tool **60** with the drive slot portion **27** of the spindle **26**; grasping and rotating

the handle portion **64** of the windup tool **60** to tighten the textile panels **22**; and, allowing the ratchet **46** and pawl **47** portions to retain a tension upon the textile panels **22** to secure the cargo **57**. It is understood that the apparatus **10** may be utilized to perform various additional tasks, and is not limited to the example applications described here, and as such should not be interpreted as a limiting factor of the invention.

The foregoing descriptions of specific embodiments of the present invention have been presented for purposes of illustration and description. They are not intended to be exhaustive or to limit the invention to the precise forms disclosed, and obviously many modifications and variations are possible in light of the above teaching. The embodiments were chosen and described in order to best explain the principles of the invention and its practical application, to thereby enable others skilled in the art to best utilize the invention and various embodiments with various modifications as are suited to the particular use contemplated.

What is claimed is:

1. A truck bed liner, comprising:

a frame assembly capable of being removably attached to an interior side of a bed of a truck via at least a pair of brackets, further comprising:

a planar portion, having a pair of distal ends each slidably engaging and securable to each of said pair of brackets;

a pair of end plates, each perpendicularly extending away from said pair of brackets and located at said pair of distal ends; and,

a spindle having a drive slot on a first end thereof, said spindle rotatingly attached to and spanning a distance between said pair of end plates; and,

a textile panel having a proximal end mounted to said frame assembly and an opposing distal edge;

wherein said spindle receives said proximal end of said textile panel;

wherein said textile panel is disposed in a rolled configuration when not deployed; and,

wherein said textile panel is selectively deployed to cover said bed of said truck or an exterior side of said bed of said truck.

2. The liner of claim **1**, wherein said frame assembly further comprises:

a ratchet gear attached to said first end of said spindle adjacent said drive slot; and,

a pawl attached to one of said pair of end plates adjacent to said ratchet gear and in mechanical communication therewith;

wherein said ratchet gear and said pawl provide for rotational control of said spindle; and,

wherein said rotational control operates to permit or arrest deployment of said textile panel.

3. The liner of claim **1**, wherein said frame assembly further comprises a windup tool capable of engaging said drive slot to selectively wind said textile panel about an axis of said spindle.

4. The liner of claim **1**, wherein said frame assembly further comprises a windup tool capable of engaging said drive slot to selectively unwind said textile panel away from said axis of said spindle.

5. A truck bed liner, comprising:

a frame assembly capable of being removably attached to an interior side of a bed of a truck via at least a pair of brackets, further comprising:

a planar portion, having a pair of distal ends each slidably engaging and securable to each of said pair of brackets;

a pair of end plates, each perpendicularly extending away from said pair of brackets and located at said pair of distal ends; and,

a spindle having a drive slot on a first end thereof, said spindle rotatingly attached to and spanning a distance between said pair of end plates;

a textile panel having a proximal end mounted to said frame assembly and an opposing distal edge; and,

at least one pole, each capable of being inserted into said textile panel;

wherein said spindle receives said proximal end of said textile panel;

wherein said textile panel is disposed in a rolled configuration when not deployed; and,

wherein said textile panel is selectively deployed to cover said bed of said truck or an exterior side of said bed of said truck.

6. The liner of claim **5**, wherein said frame assembly further comprises:

a ratchet gear attached to said first end of said spindle adjacent said drive slot; and,

a pawl attached to one of said pair of end plates adjacent to said ratchet gear and in mechanical communication therewith;

wherein said ratchet gear and said pawl provide for rotational control of said spindle; and,

wherein said rotational control operates to permit or arrest deployment of said textile panel.

7. The liner of claim **5**, wherein said frame assembly further comprises a windup tool capable of engaging said drive slot to selectively wind said textile panel about an axis of said spindle.

8. The liner of claim **5**, wherein said frame assembly further comprises a windup tool capable of engaging said drive slot to selectively unwind said textile panel away from said axis of said spindle.

9. The liner of claim **5**, wherein said distal edge of said textile panel further comprises at least a pair of grommets disposed adjacent to a perimeter thereof;

wherein each said pole has a first end configured to be inserted into an individual grommet and a second end configured to be inserted into or onto a surface; and,

wherein each said pole is configured to support said distal edge of said textile panel at an elevated position above said surface.

10. A truck bed liner, comprising:

a first frame assembly capable of being removably attached to a first interior side of a bed of a truck via at least a first pair of brackets;

a second frame assembly capable of being removably attached to a second interior side of a bed of a truck opposite said first interior side via at least a second pair of brackets;

a first textile panel having a proximal end mounted to said first frame assembly and an opposing first distal edge;

a second textile panel having a second proximal end mounted to said second frame assembly and an opposing second distal edge;

a cord, capable of conjoining said first and second textile panels; and,

at least one pole, each capable of being inserted into said first and second textile panel;

wherein said first and second frame assemblies each further comprises:

a planar portion, having a pair of distal ends each slidably engaging and securable to each of said respective first or second pair of brackets;

a pair of end plates, each perpendicularly extending away from said respective first or second pair of brackets and located at said pair of distal ends; and,

a spindle having a drive slot on a first end thereof, said spindle rotatingly attached to and spanning a distance between said pair of end plates;

wherein said spindle is capable of receiving said first proximal end of said first textile panel or said second proximal end of said second textile panel;

wherein said first and second textile panels are disposed in a rolled configuration when not deployed;

wherein said first textile panel is selectively deployed to cover said bed of said truck or a first exterior side of said bed of said truck; and,

wherein said second textile panel is selectively deployed to cover said bed of said truck or a second exterior side of said bed of said truck.

11. The liner of claim **10**, wherein said first and second frame assemblies further comprise:

a ratchet gear attached to said first end of said spindle which is adjacent said drive slot; and,

a pawl attached to one of said pair of end plates adjacent to said ratchet gear and in mechanical communication therewith;

wherein said ratchet gear and said pawl provide for rotational control of said spindle; and,

wherein said rotational control operates to permit or arrest deployment of said first or second textile panel.

12. The liner of claim **10**, wherein said first and second frame assembly further comprises a windup tool capable of engaging said drive slot to selectively wind said first or second textile panel about an axis of said spindle.

13. The liner of claim **10**, wherein said first and second frame assembly further comprises a windup tool capable of engaging said drive slot to selectively unwind said first or second textile panel away from said axis of said spindle.

14. The liner of claim **10**, wherein said first and second textile panel distal edge each further comprises at least a pair of grommets disposed adjacent to a perimeter thereof;

wherein each said pole has a first end configured to be inserted into an individual grommet and a second end configured to be inserted into or onto a surface;

wherein each said pole is configured to support said distal edge of said textile panel at an elevated position above said surface; and,

wherein said cord is capable of being routed through grommets of said first textile panel distal edge and said second textile panel distal edge, when said first and second textile panels are deployed within said bed.

* * * * *