US009229494B2

(12) **United States Patent**
Rayner

(10) **Patent No.: US 9,229,494 B2**
(45) **Date of Patent: Jan. 5, 2016**

(54) **ACCESSORIES FOR USE WITH HOUSING FOR AN ELECTRONIC DEVICE**

(71) Applicant: **TreeFrog Developments, Inc.**, San Diego, CA (US)

(72) Inventor: **Gary Rayner**, San Diego, CA (US)

(73) Assignee: **TREEFROG DEVELOPMENTS, INC.**, San Diego, CA (US)

(*) Notice: Subject to any disclaimer, the term of this patent is extended or adjusted under 35 U.S.C. 154(b) by 401 days.

(21) Appl. No.: **13/726,469**

(22) Filed: **Dec. 24, 2012**

(65) **Prior Publication Data**

US 2014/0028243 A1 Jan. 30, 2014

Related U.S. Application Data

(60) Provisional application No. 61/579,636, filed on Dec. 22, 2011, provisional application No. 61/649,911, filed on May 21, 2012, provisional application No. 61/694,744, filed on Aug. 29, 2012, provisional application No. 61/708,629, filed on Oct. 1, 2012.

(51) **Int. Cl.**

H02J 7/00	(2006.01)
G06F 1/18	(2006.01)
G06F 1/16	(2006.01)
H02J 7/02	(2006.01)
F16M 11/04	(2006.01)
F16M 11/10	(2006.01)
F16M 11/14	(2006.01)
F16M 11/20	(2006.01)
F16M 13/00	(2006.01)

(Continued)

(52) **U.S. Cl.**

CPC ***G06F 1/182*** (2013.01); ***F16M 11/041*** (2013.01); ***F16M 11/105*** (2013.01); ***F16M 11/14*** (2013.01); ***F16M 11/2057*** (2013.01); ***F16M 13/00*** (2013.01); ***F16M 13/022*** (2013.01); ***F16M 13/04*** (2013.01); ***G06F 1/163*** (2013.01); ***G06F 1/1632*** (2013.01); ***G06F 1/1635*** (2013.01); ***G06F 1/1637*** (2013.01); ***H02J 7/0052*** (2013.01); ***H02J 7/025*** (2013.01); ***H04B 1/385*** (2013.01); ***H04B 1/3877*** (2013.01); ***H04B 1/3888*** (2013.01); ***H05K 5/0013*** (2013.01); ***H05K 5/0086*** (2013.01); ***H05K 5/061*** (2013.01); *A45C 2011/003* (2013.01); *H04B 2001/3855* (2013.01); *H04B 2001/3894* (2013.01); *H04M 1/04* (2013.01)

(58) **Field of Classification Search**

USPC 320/112, 108; 361/701, 703, 722, 724

See application file for complete search history.

(56) **References Cited**

U.S. PATENT DOCUMENTS

3,521,216	A	7/1970	Tolegian
3,808,577	A	4/1974	Mathauser

(Continued)

OTHER PUBLICATIONS

International Search Report and Written Opinion dated Mar. 8, 2013, for PCT application No. PCT/US2012/071520.

Primary Examiner — Brian Ngo

(57) **ABSTRACT**

This disclosure relates generally to a device for retaining an electronic device as well as for methods for using the device for the purpose of doing the same. In various instances, the electronic device includes a housing and the retaining device is adapted for interfacing with the housing of the electronic device. The housing may be a separate unit from the electronic device or part of the electronic device itself. In various instances, the housing is a separate unit from the electronic device, within which the electronic device is fitted. In certain instances, the housing for the electronic device is adapted for protecting the device from one or more of shock, liquid, dust, snow, and the like. The electronic device may be any suitable electronic device, such as a computer, mobile computer, notebook computer, tablet computer, telephone, personal digital assistant, or the like.

21 Claims, 192 Drawing Sheets

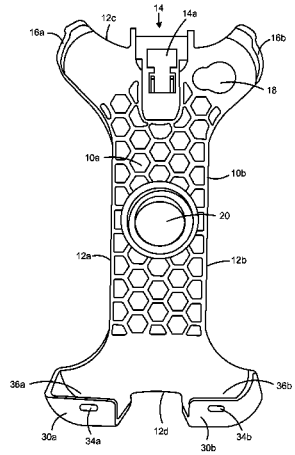

(51) **Int. Cl.**

F16M 13/02	(2006.01)
F16M 13/04	(2006.01)
H04B 1/3827	(2015.01)
H04B 1/3877	(2015.01)
H04B 1/3888	(2015.01)
H05K 5/00	(2006.01)
H05K 5/06	(2006.01)
H04M 1/04	(2006.01)
A45C 11/00	(2006.01)
H04B 1/38	(2015.01)

(56) **References Cited**

U.S. PATENT DOCUMENTS

3,810,258	A	5/1974	Mathauser	
3,816,679	A	6/1974	Hotchkiss	
4,312,580	A	1/1982	Schwomma et al.	
4,420,078	A	12/1983	Belt et al.	
4,584,718	A	4/1986	Fuller	
4,649,453	A	3/1987	Iwasawa	
4,895,530	A	1/1990	Gugelmeyer et al.	
6,304,459	B1	10/2001	Toyosato et al.	
7,158,376	B2 *	1/2007	Richardson et al.	361/679.56
7,409,148	B2	8/2008	Takahashi et al.	
7,464,813	B2	12/2008	Carnevali	
7,889,489	B2	2/2011	Richardson et al.	
7,889,498	B2	2/2011	Diebel et al.	
7,993,071	B2	8/2011	Clawson	
8,917,496	B2	12/2014	Richardson et al.	
2005/0134215	A1	6/2005	Bozzone et al.	
2008/0094027	A1	4/2008	Cho	
2010/0298025	A1	11/2010	Spence	
2011/0077063	A1	3/2011	Yabe et al.	

* cited by examiner

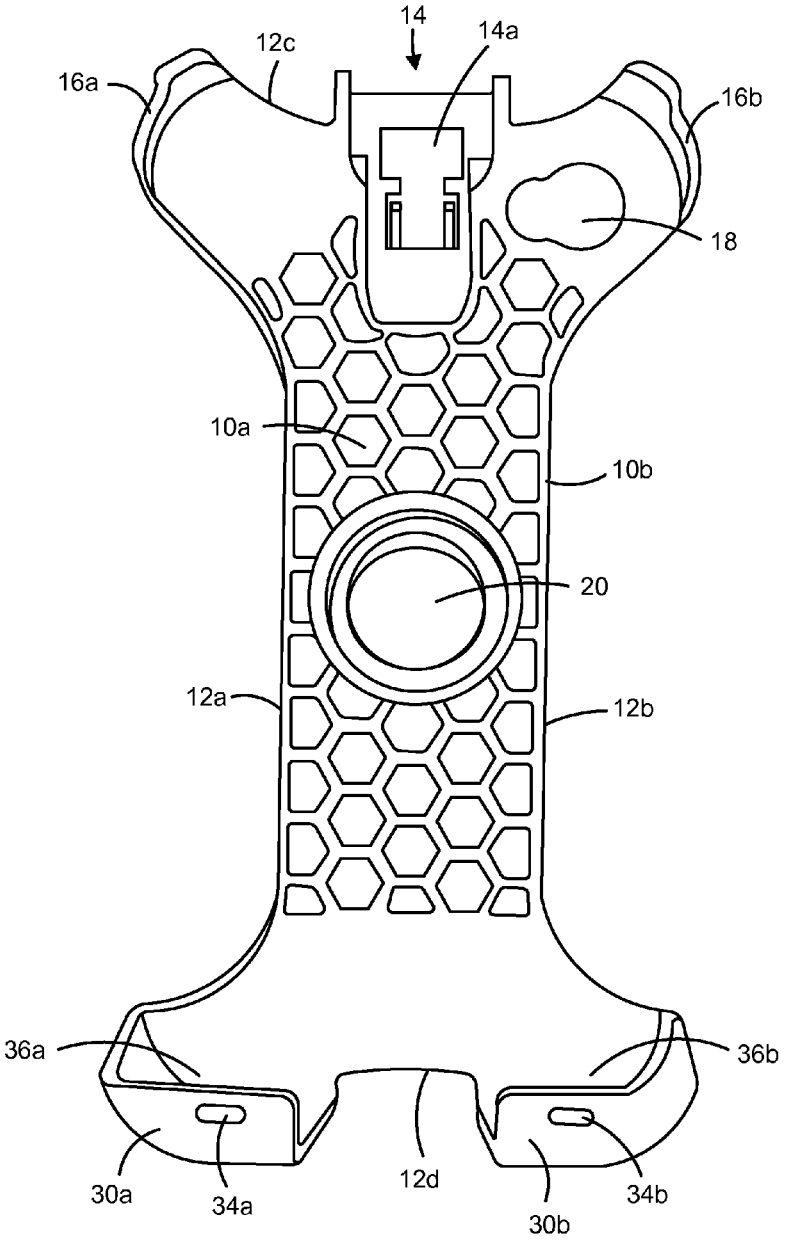
14
14a
12c
16a
16b
18
10a
10b
20
12a
12b
36a
36b
30a
34a
12d
30b
34b

FIG. 1A

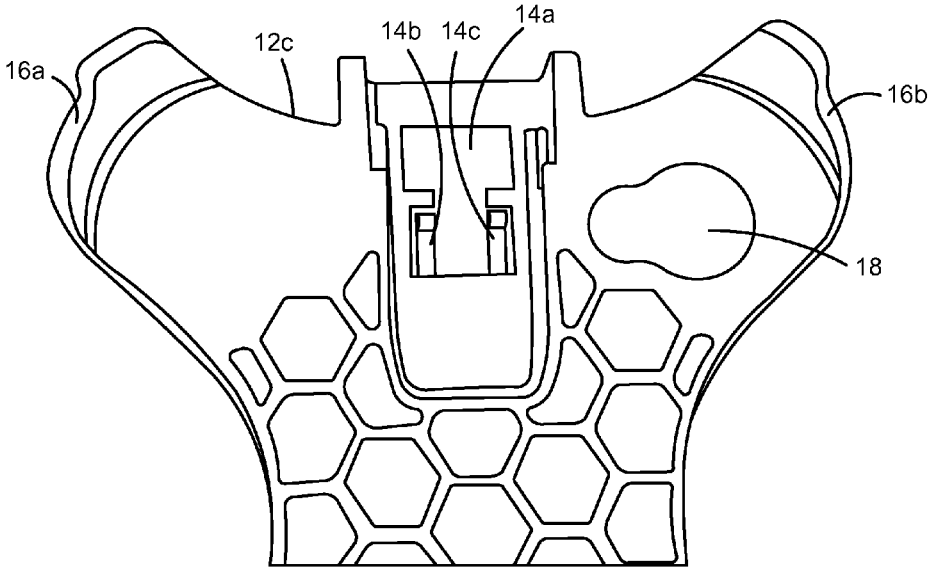

FIG. 1B

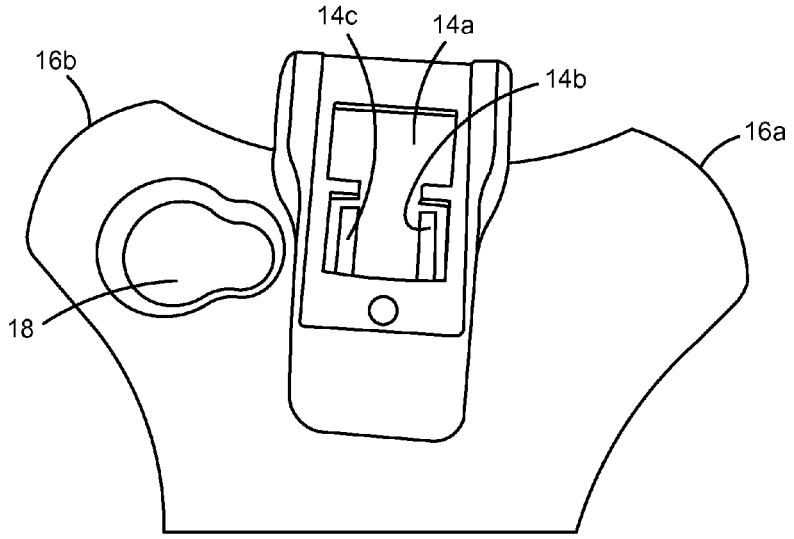

FIG. 1C

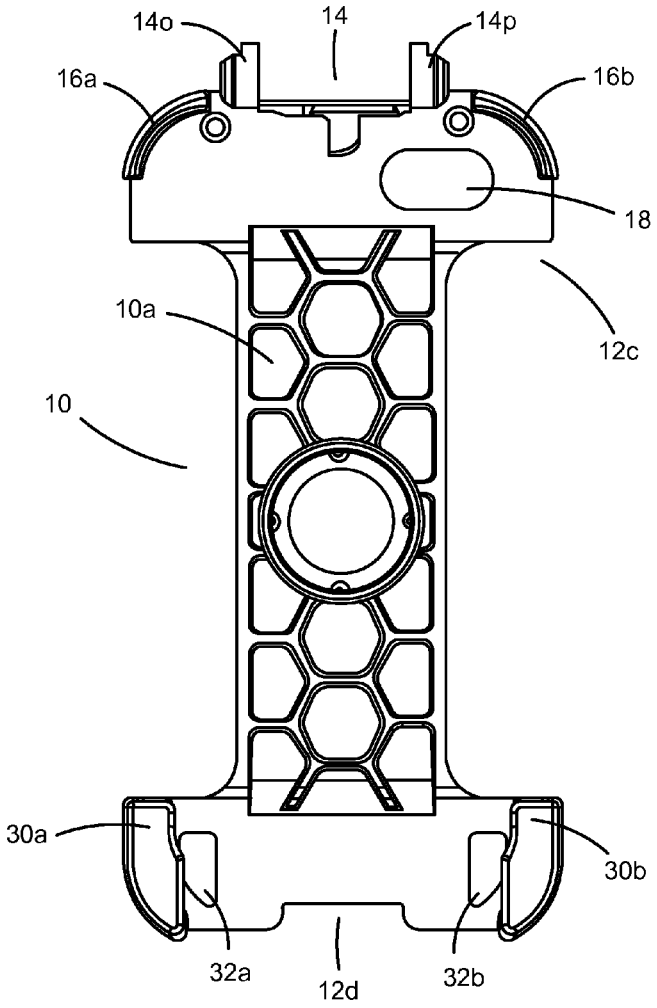

FIG. 1D

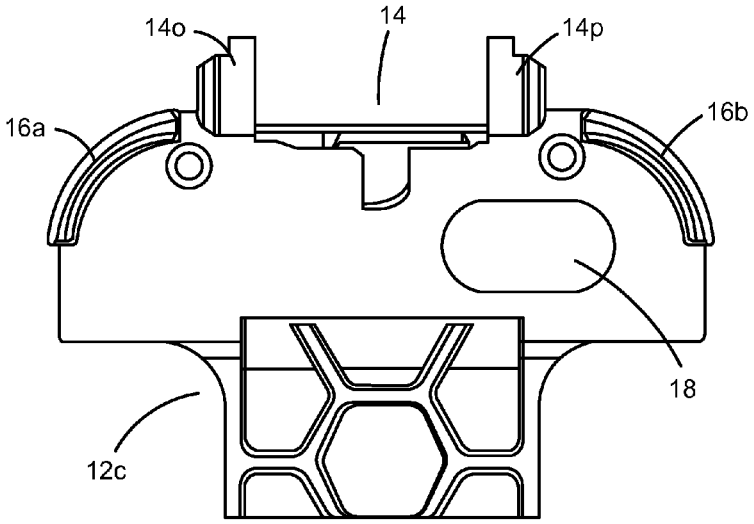

FIG. 1E

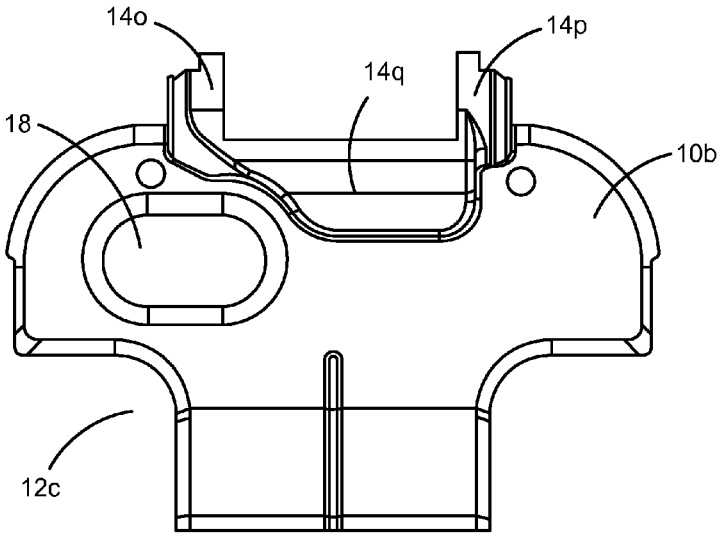

FIG. 1F

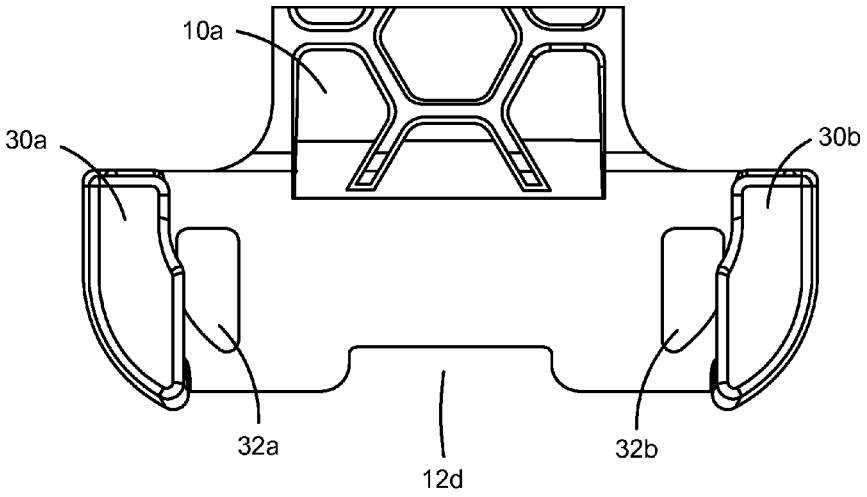

FIG. 1G

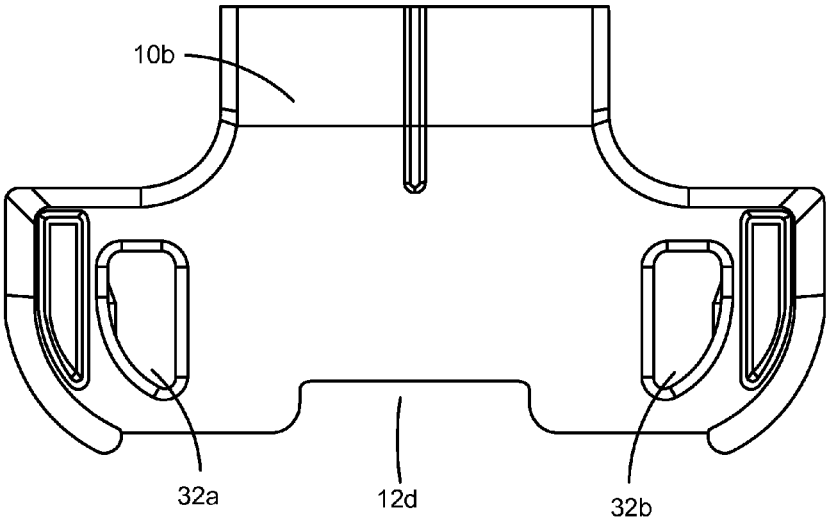

FIG. 1H

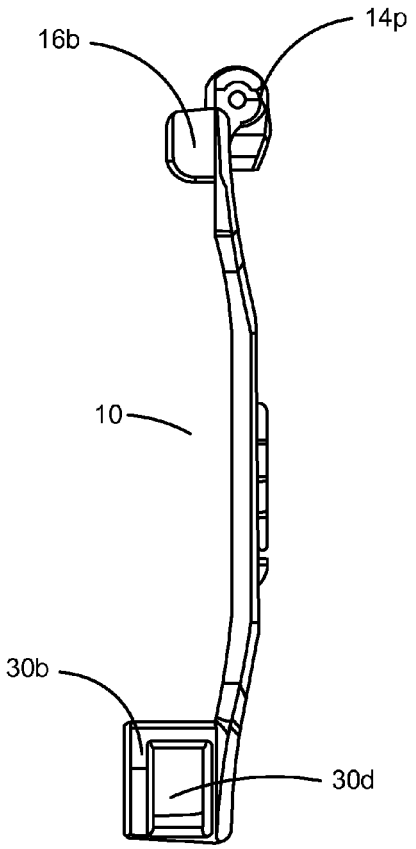

FIG. 1I

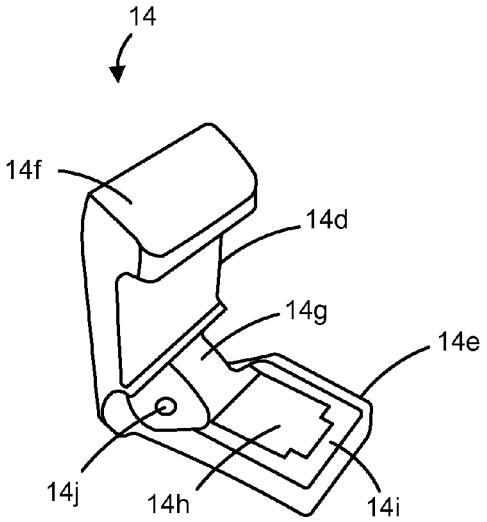

FIG. 2A

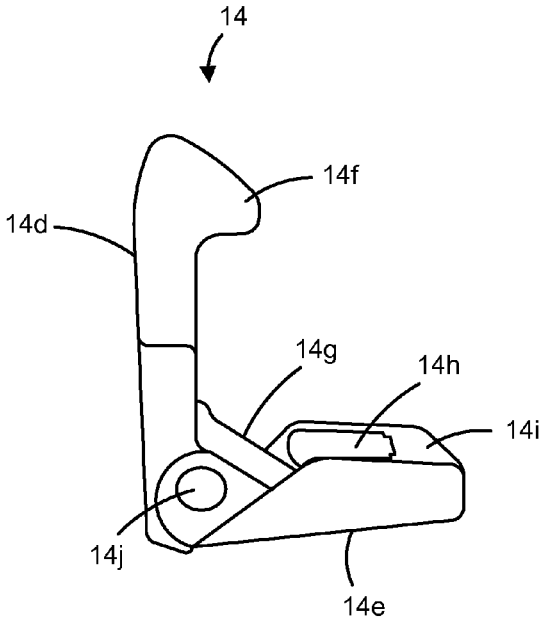

FIG. 2B

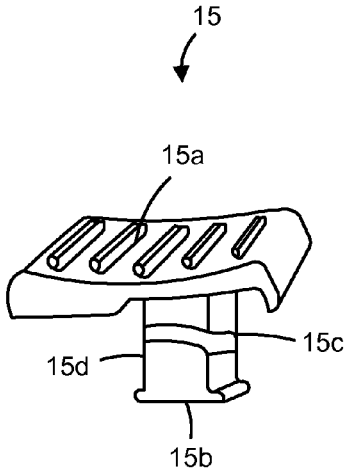

FIG. 2C

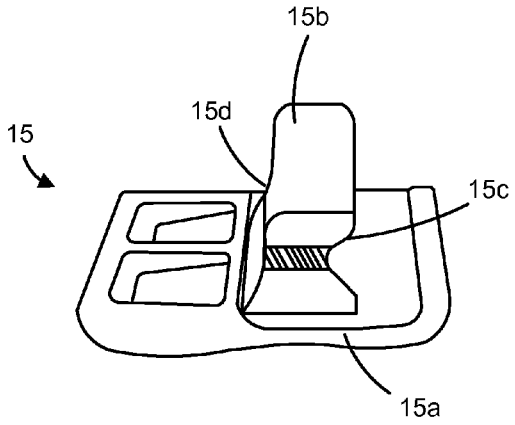

FIG. 2D

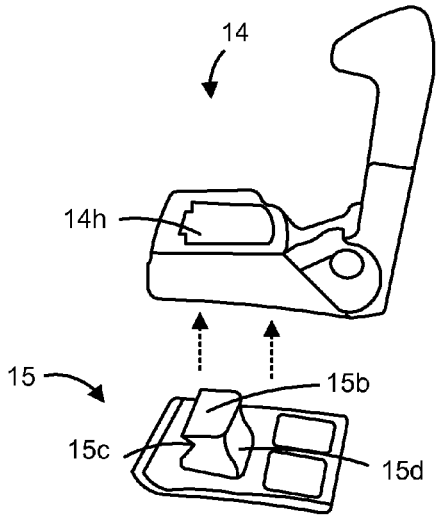

FIG. 2E

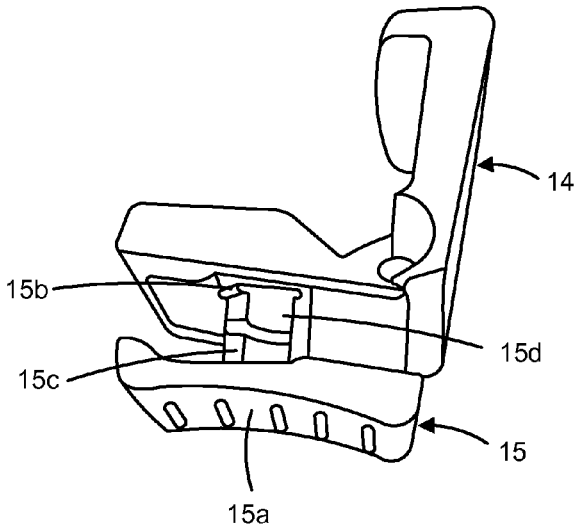

FIG. 2F

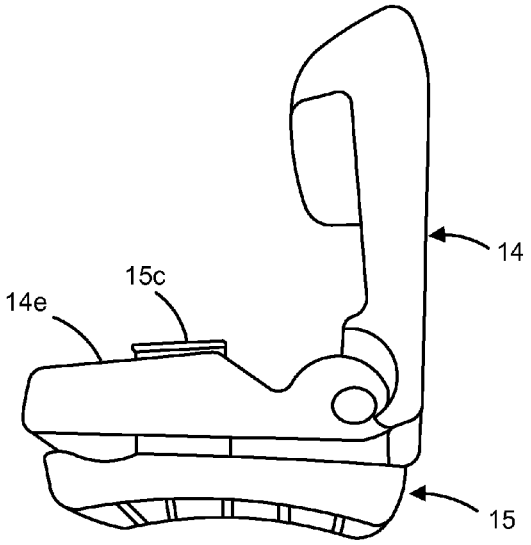

FIG. 2G

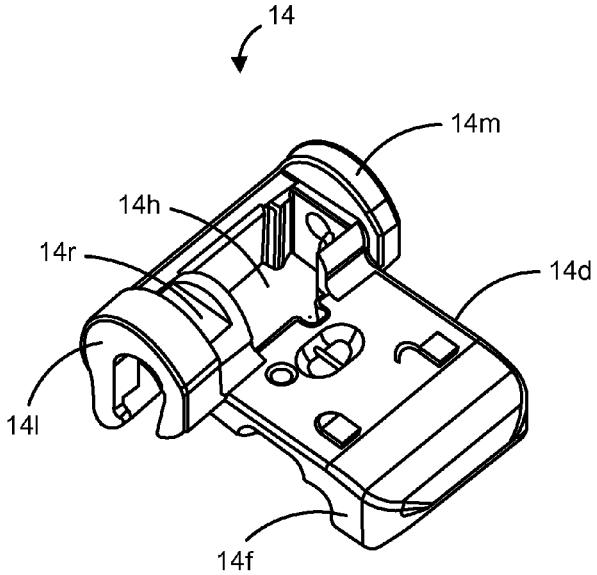

FIG. 2H

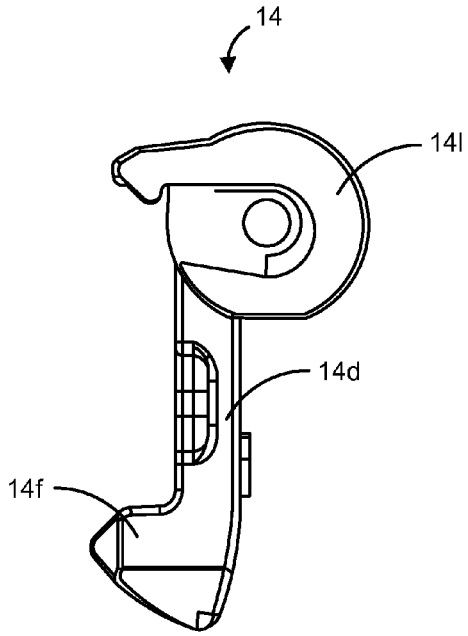

FIG. 2I

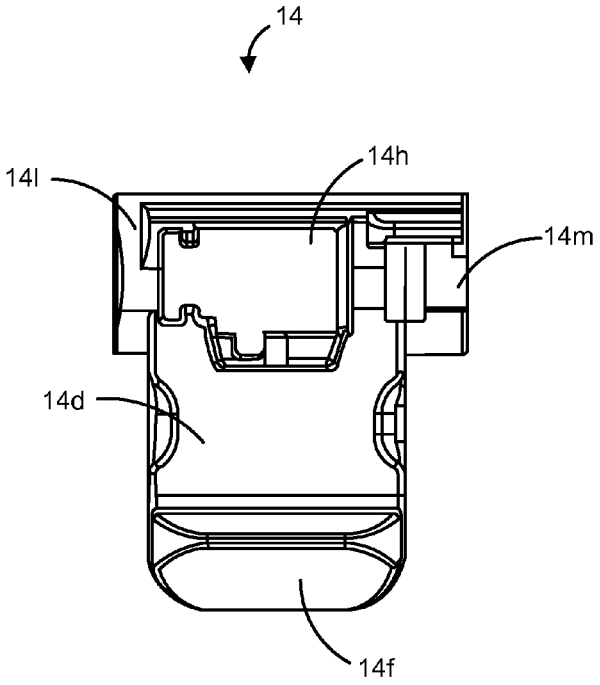

FIG. 2J

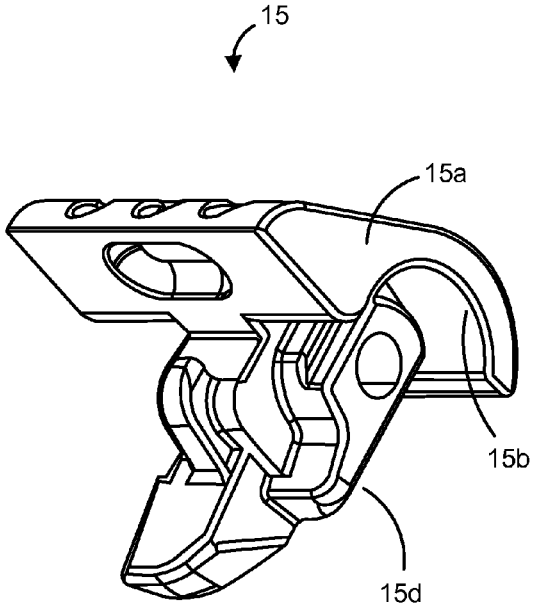

FIG. 2K

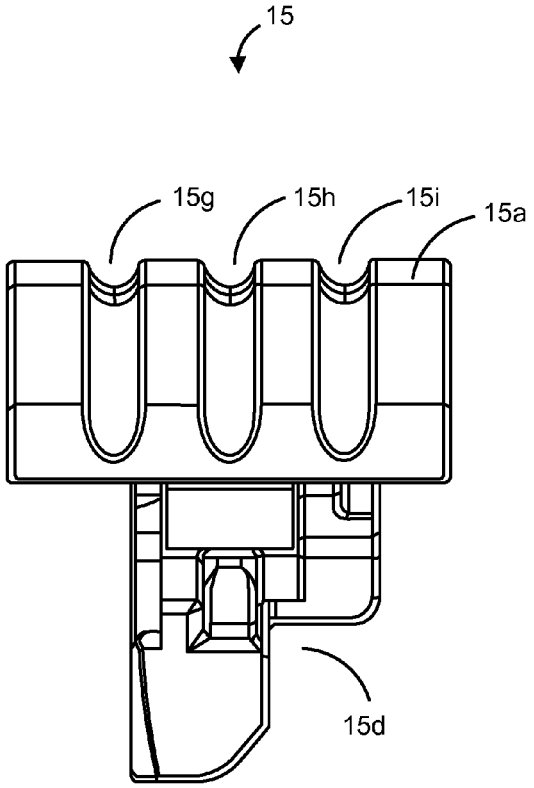

FIG. 2L

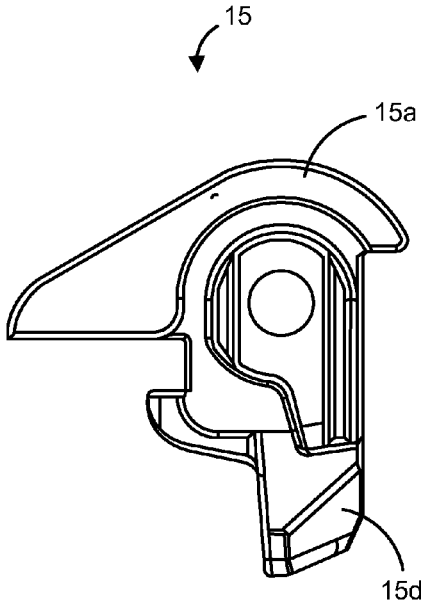

FIG. 2M

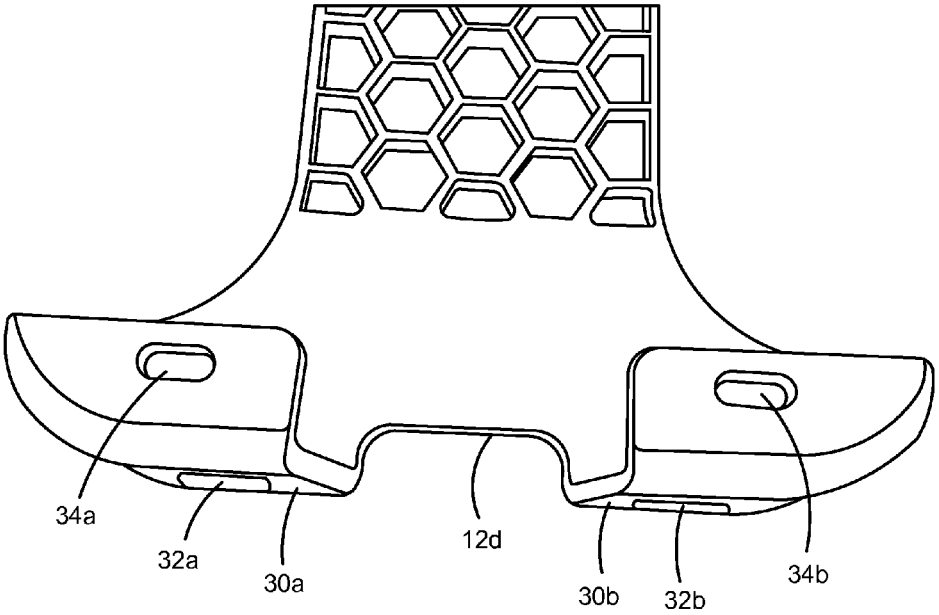

FIG. 3A

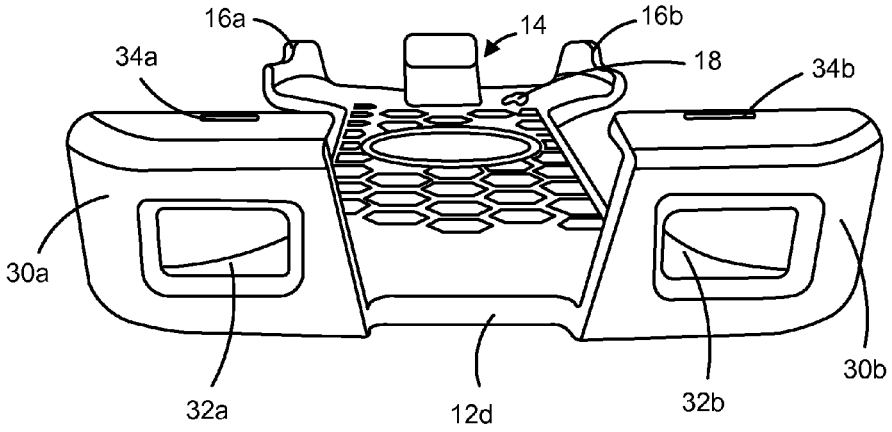

FIG. 3B

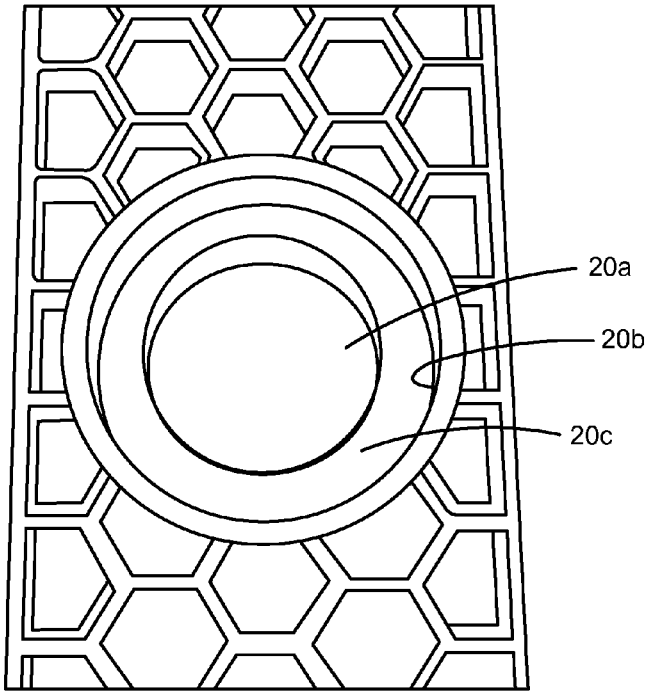

FIG. 4A

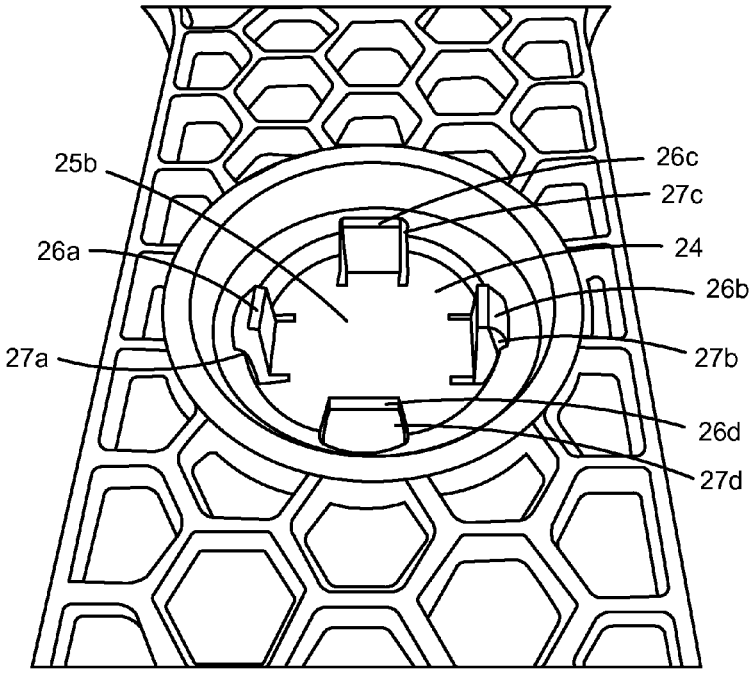

FIG. 4B

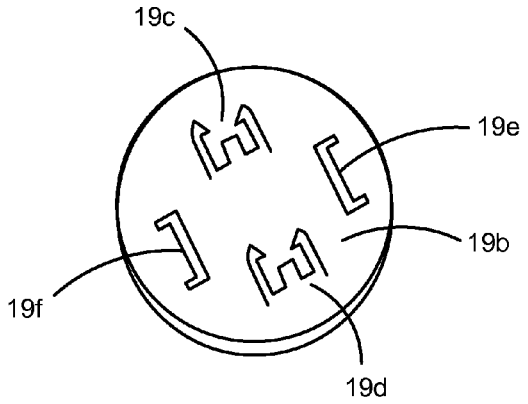

FIG. 4C

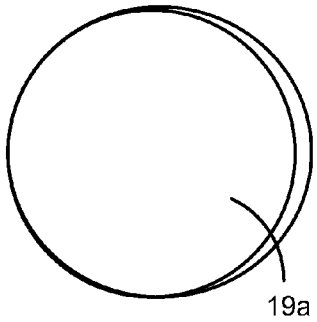

FIG. 4D

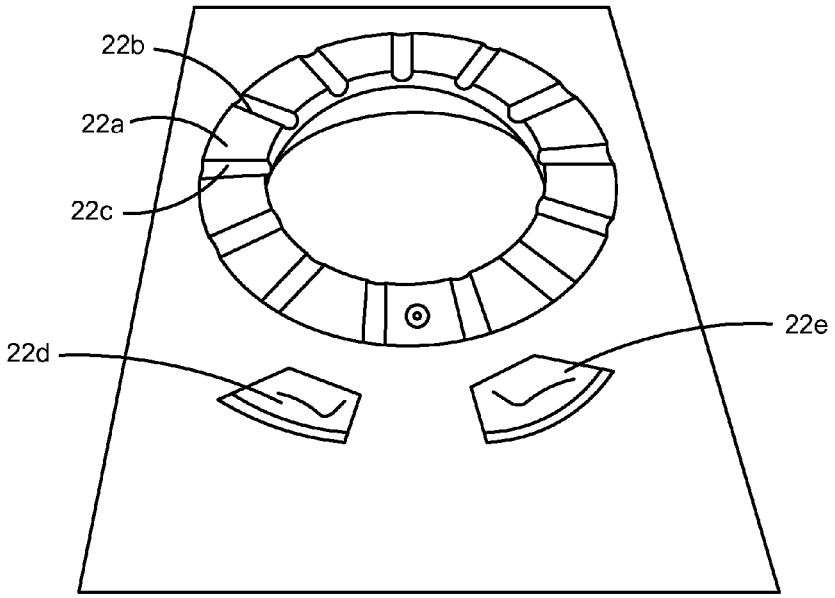

FIG. 4E

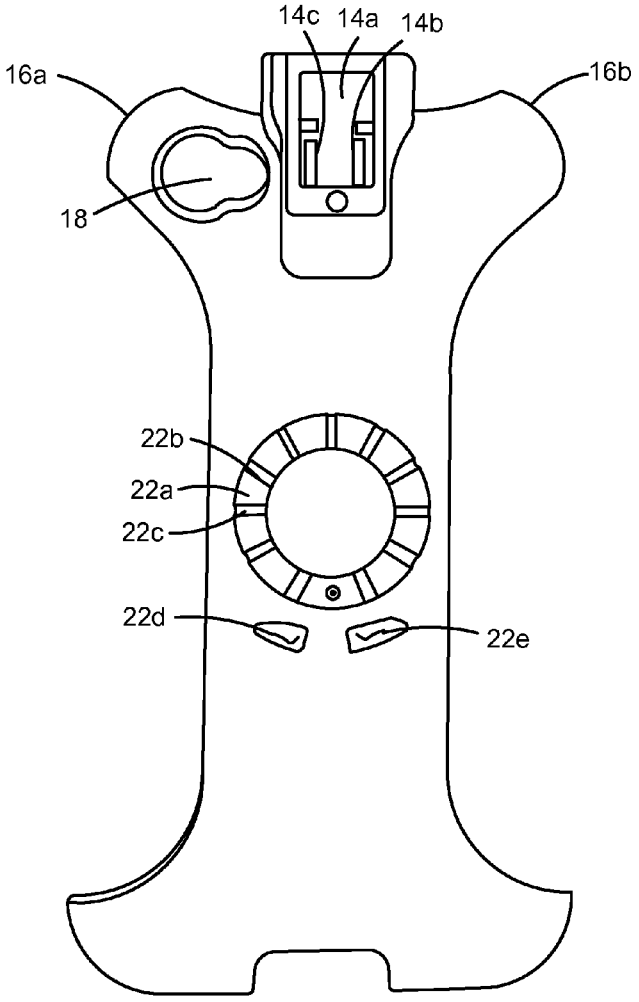

FIG. 4F

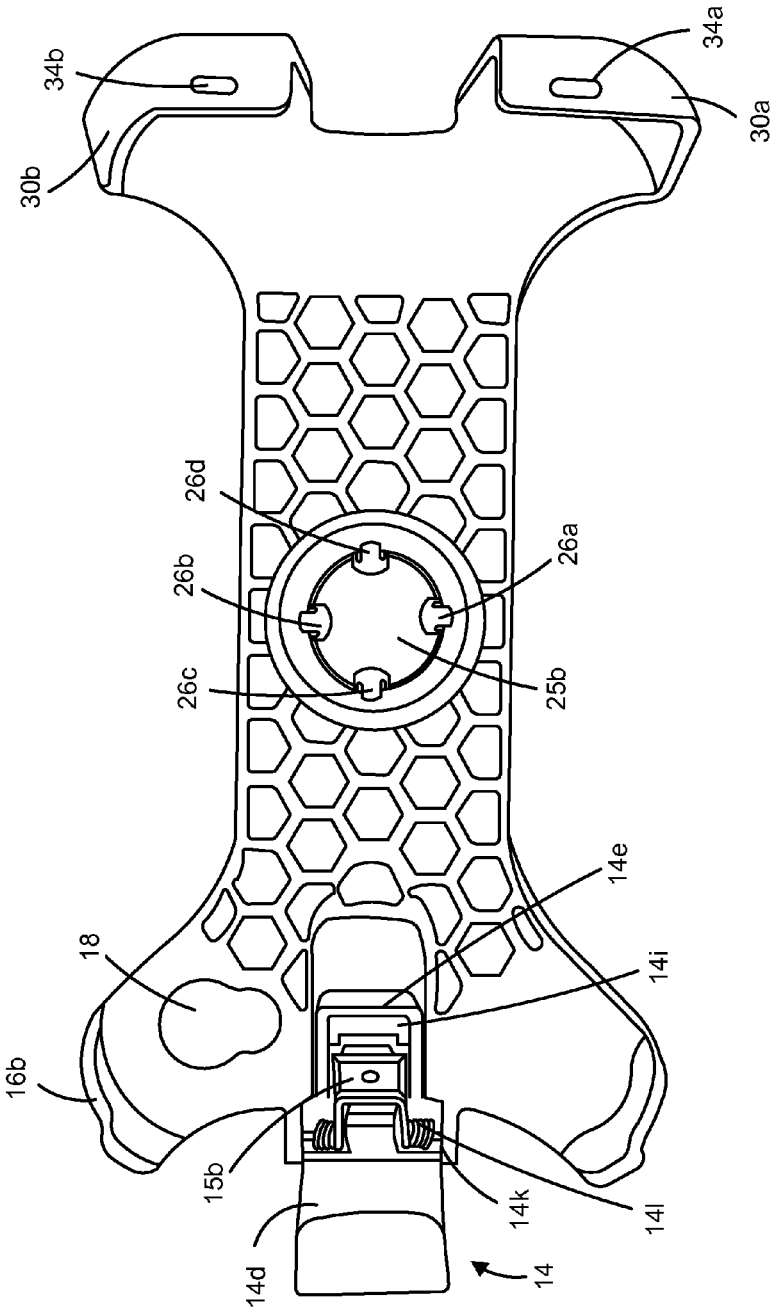
34b
30b
34a
30a
26d
26b
26c
26a
25b
18
16b
14e
14i
15b
14d
14k
14l
14

FIG. 4G

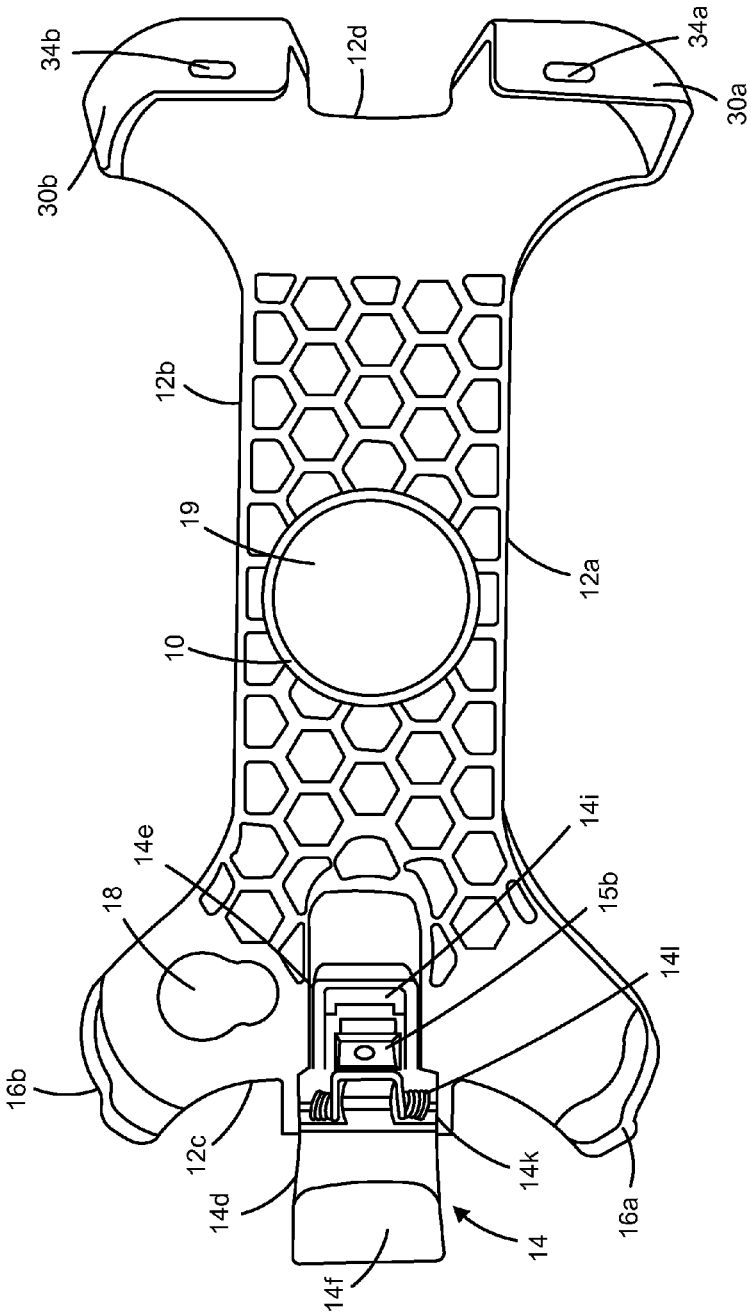
34b
30b
12d
34a
30a
12b
19
10
12a
14e
18
14i
15b
14l
16b
12c
14d
14f
14
14k
16a

FIG. 4H

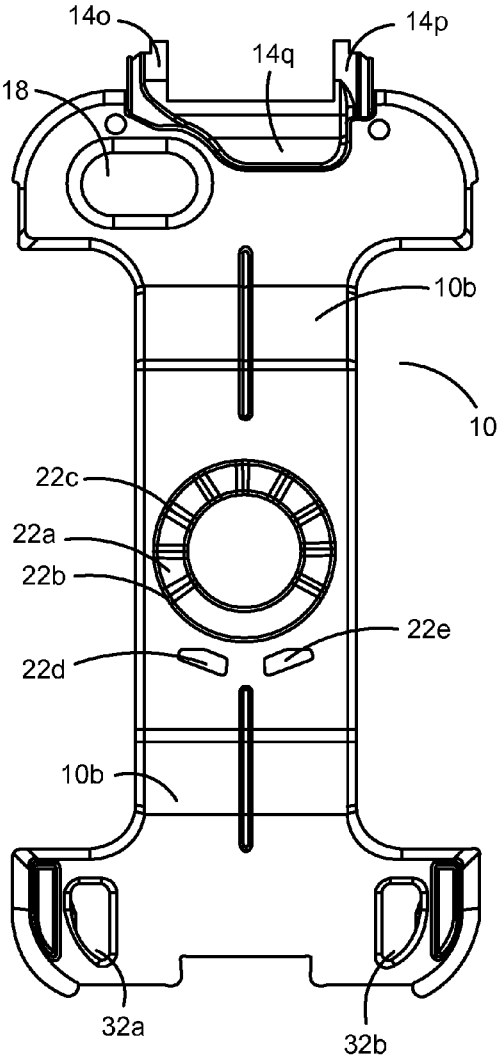

FIG. 4I

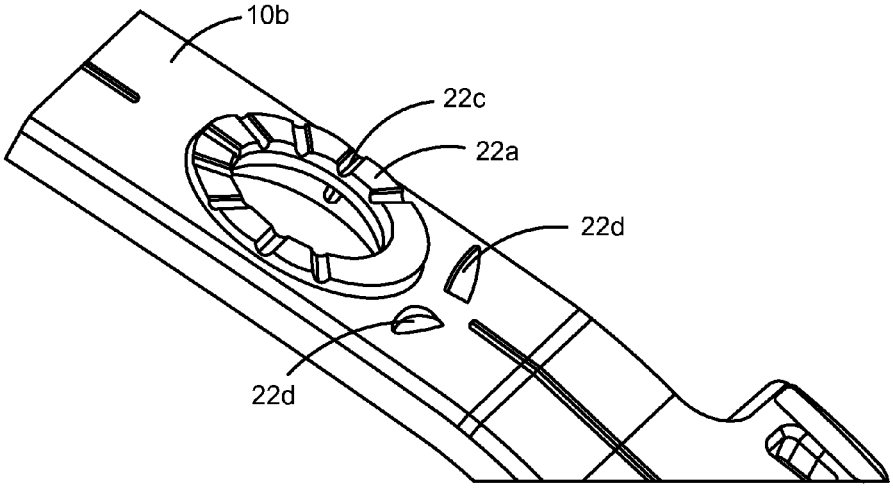

FIG. 4J

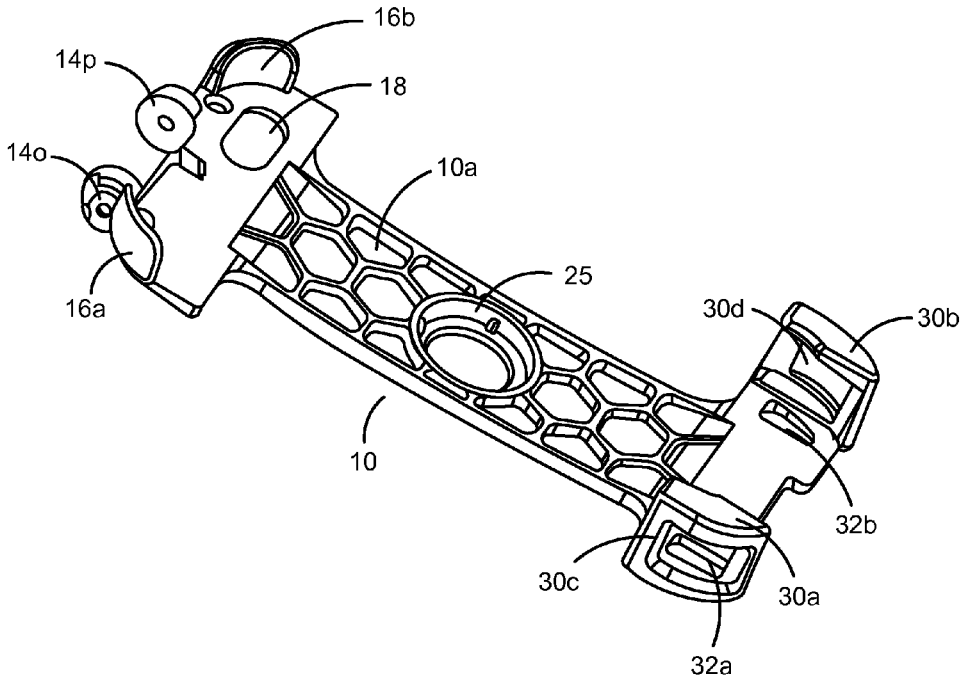

FIG. 4K

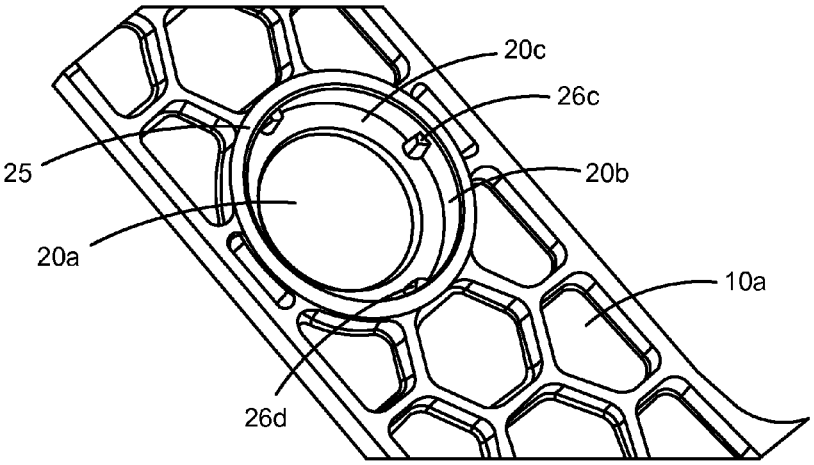

FIG. 4L

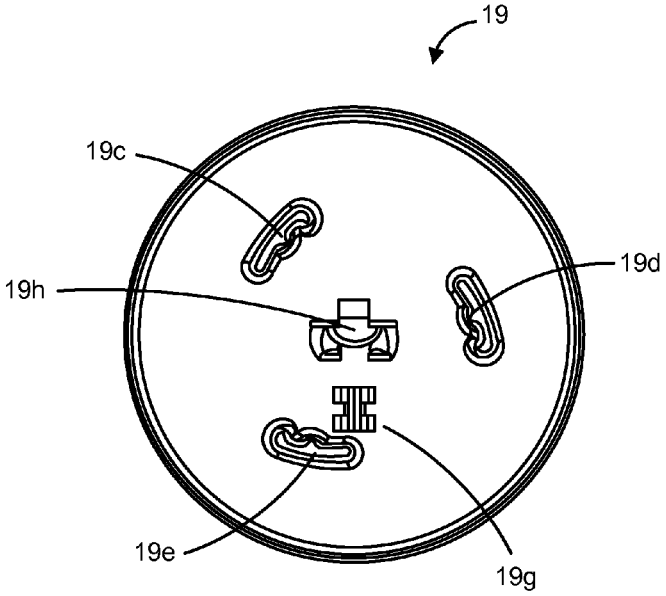

FIG. 4M

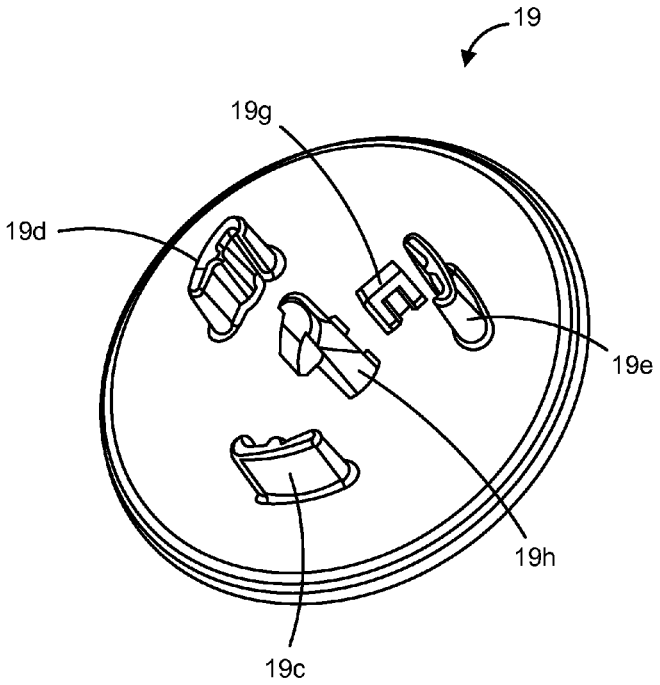

FIG. 4N

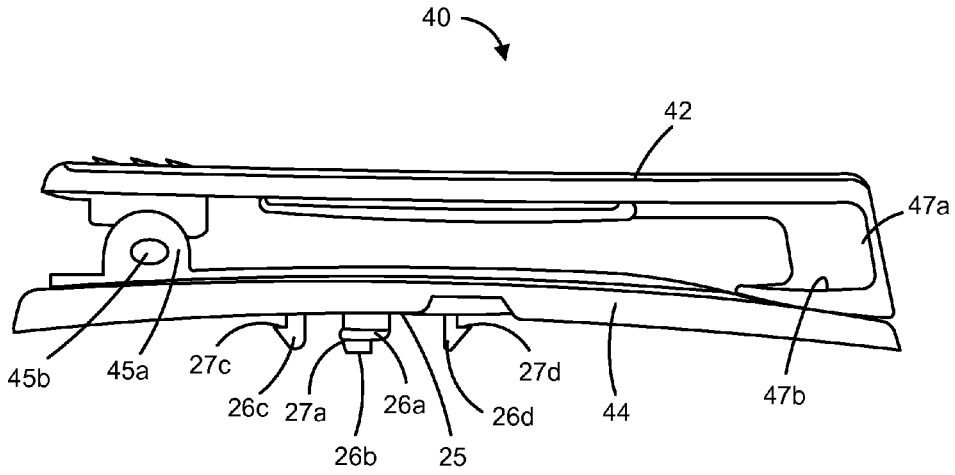

FIG. 5A

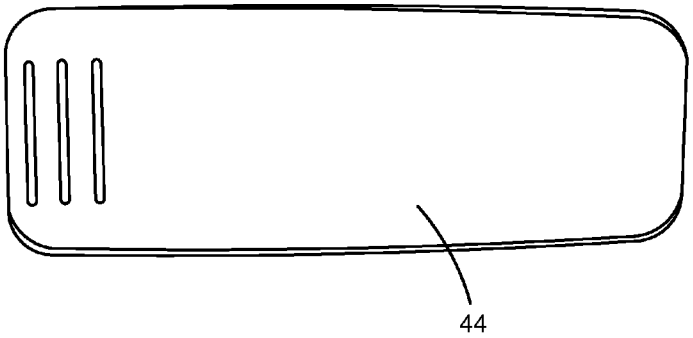

FIG. 5B

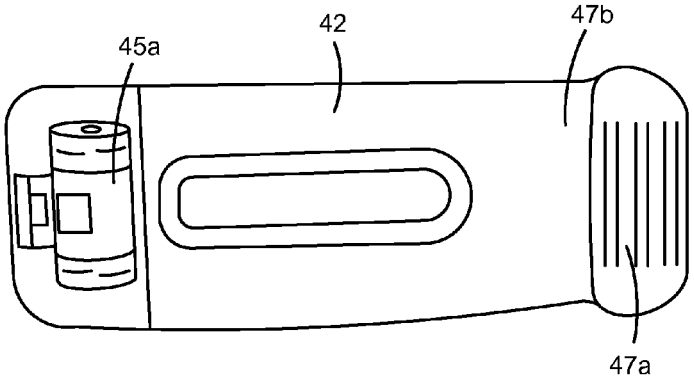

FIG. 5C

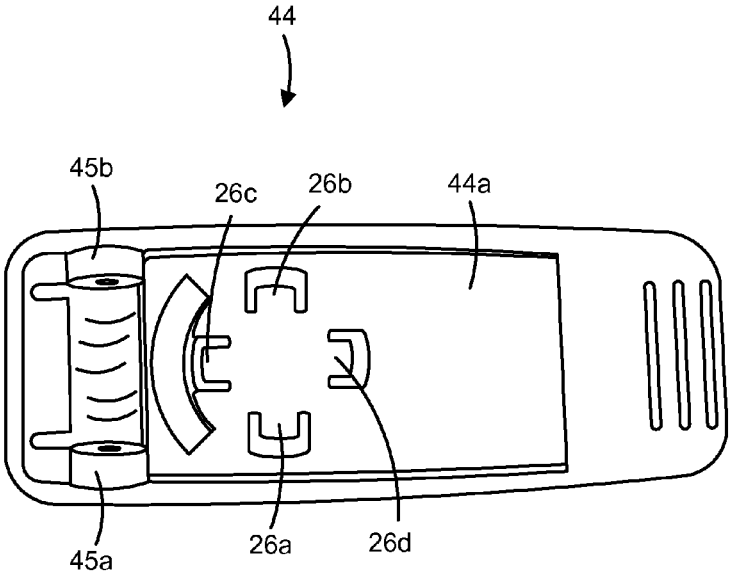

FIG. 5D

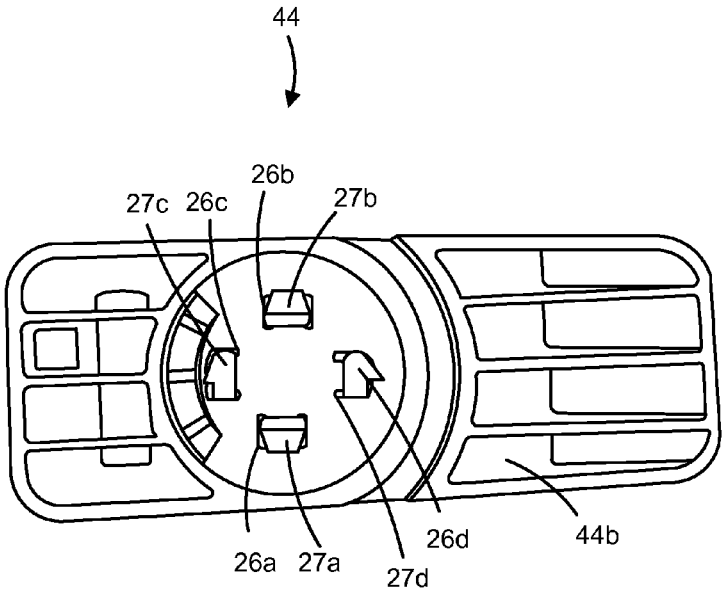

FIG. 5E

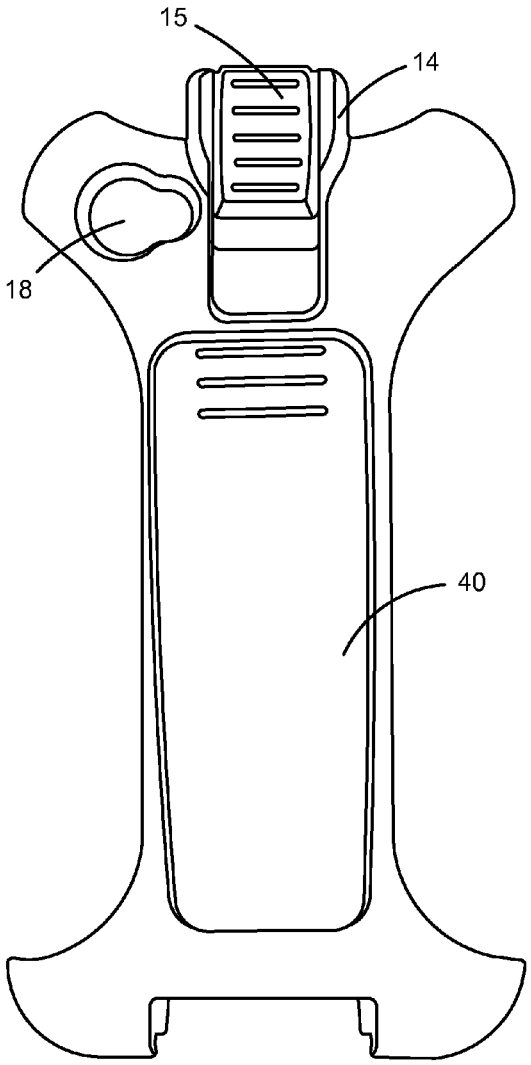

FIG. 5F

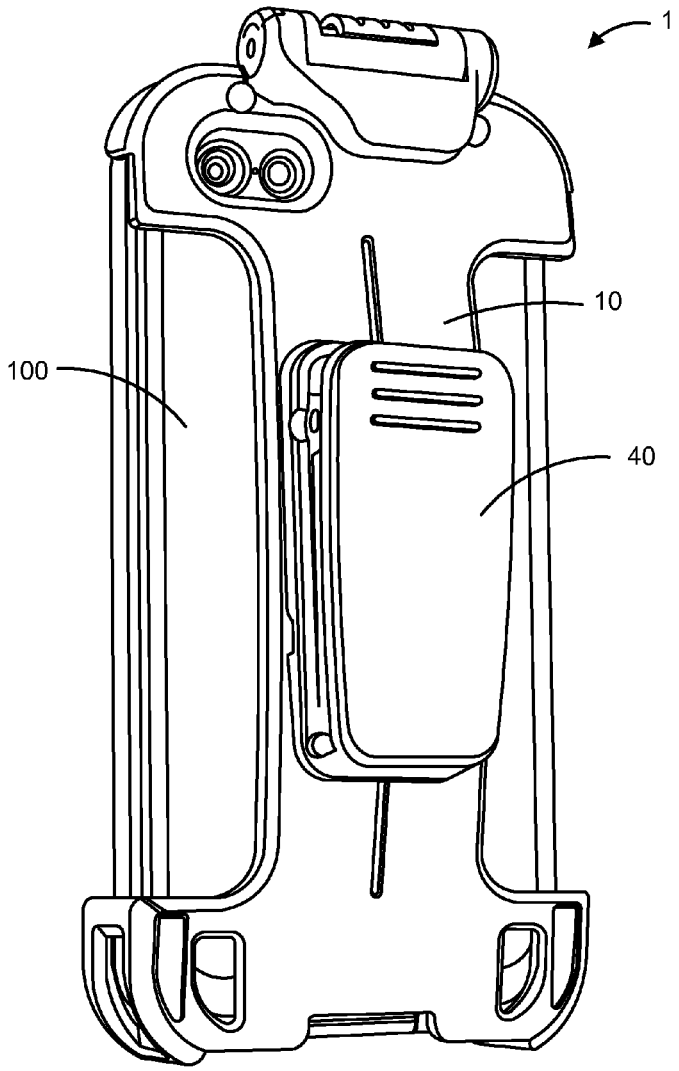

FIG. 5G

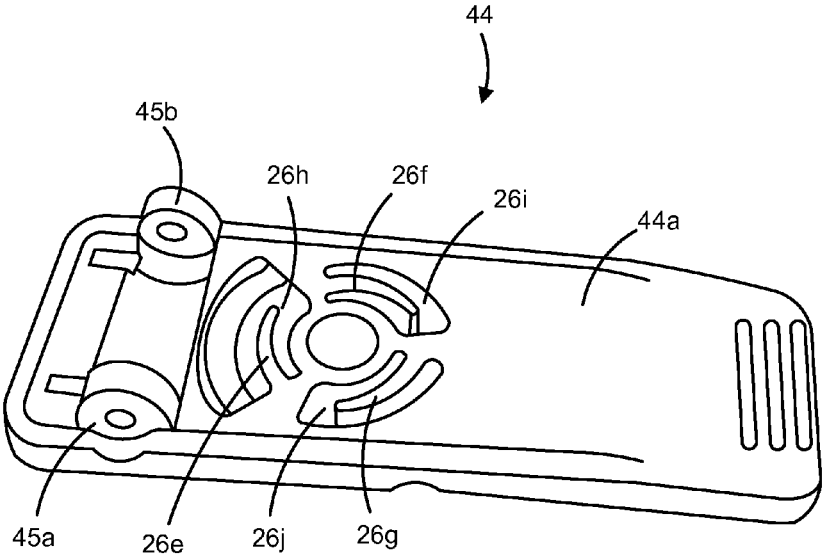

FIG. 5H

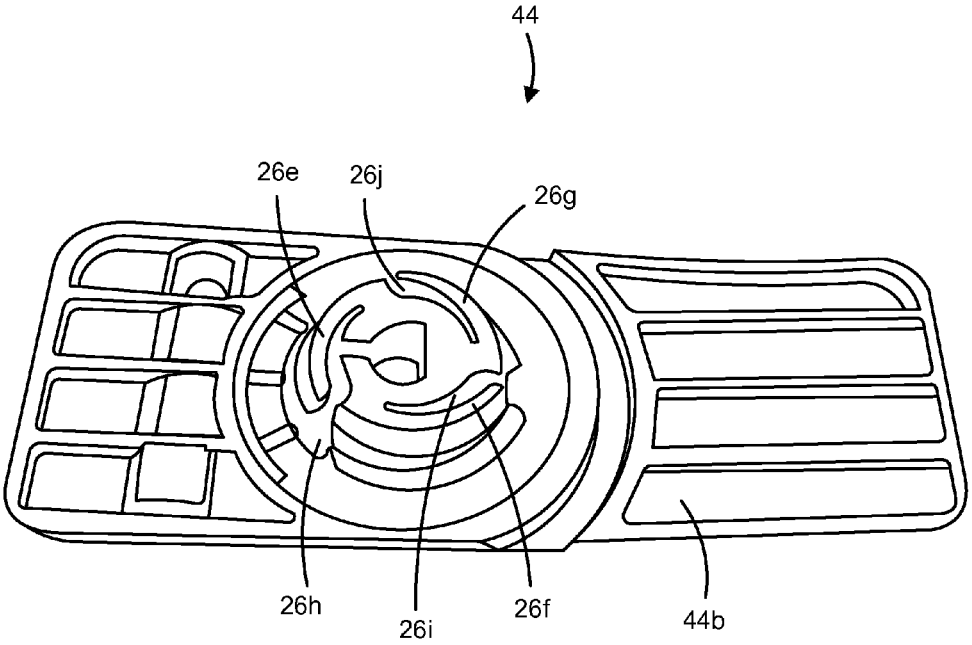

FIG. 5I

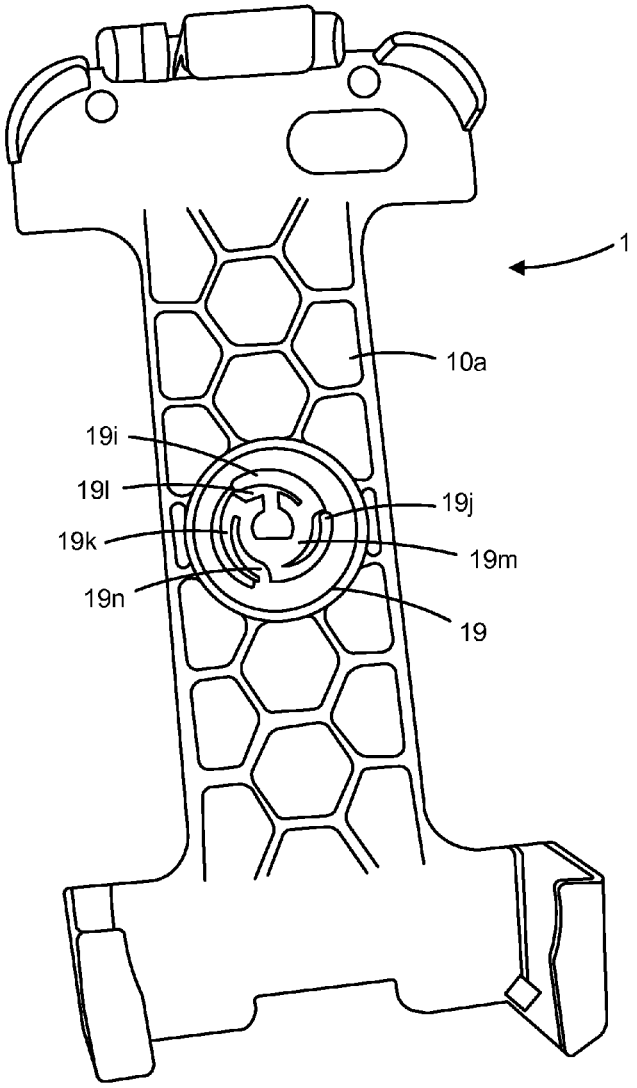

FIG. 5J

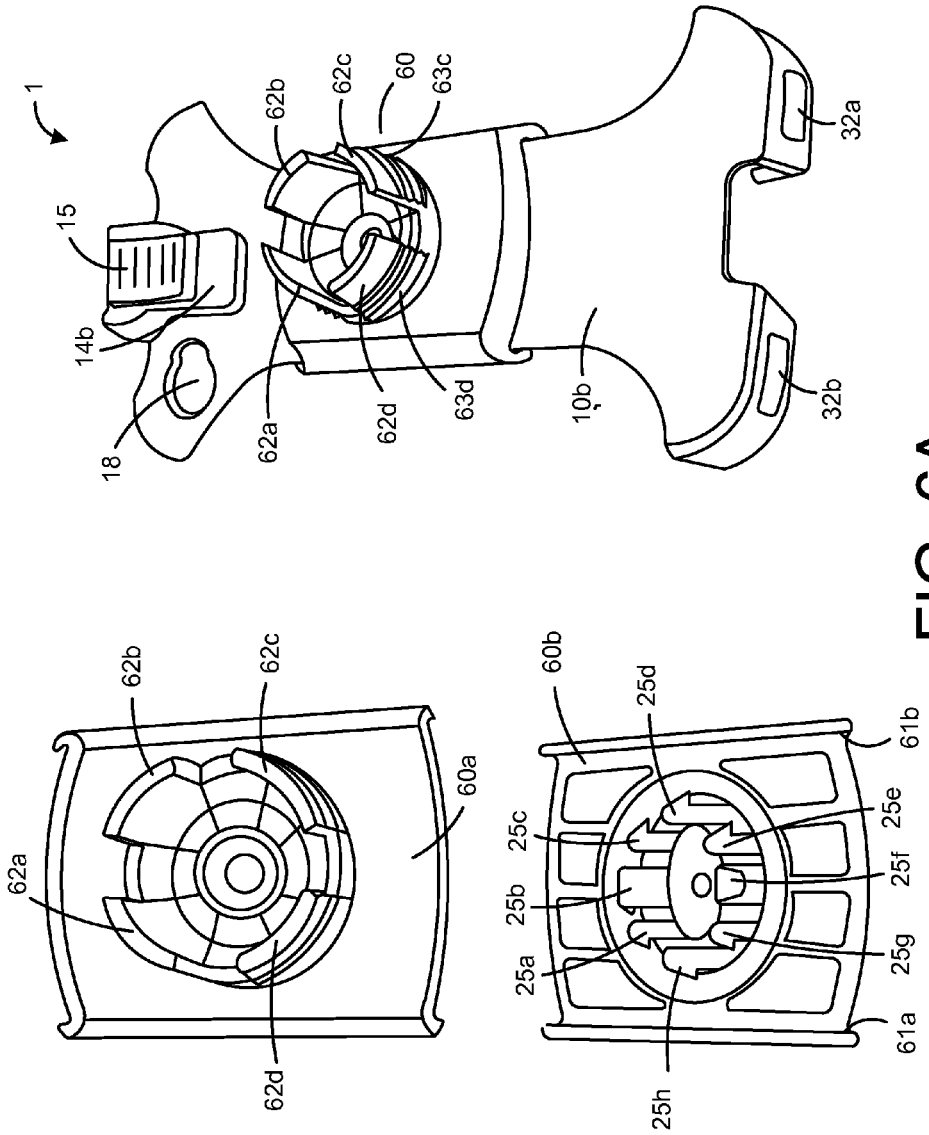
1
15
14b
18
62b
62c
60
63c
62a
62d
63d
10b
32a
32b
62a
62b
62c
62d
60a
60b
25d
61b
25c
25e
25b
25f
25a
25g
61a
25h

FIG. 6A

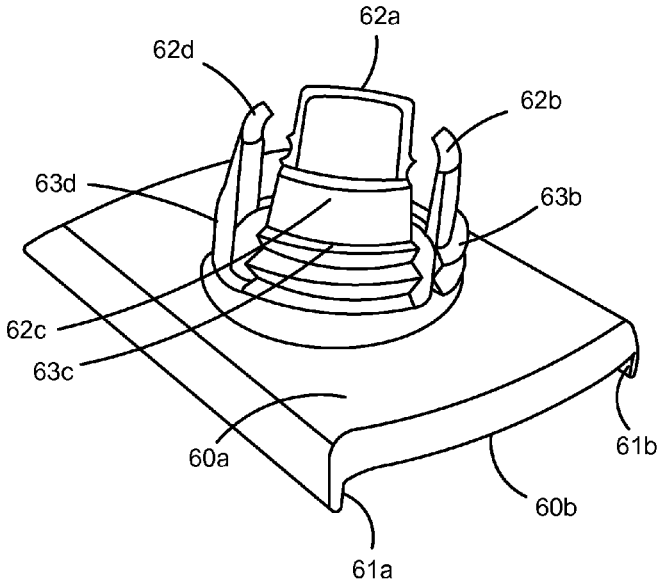

FIG. 6B

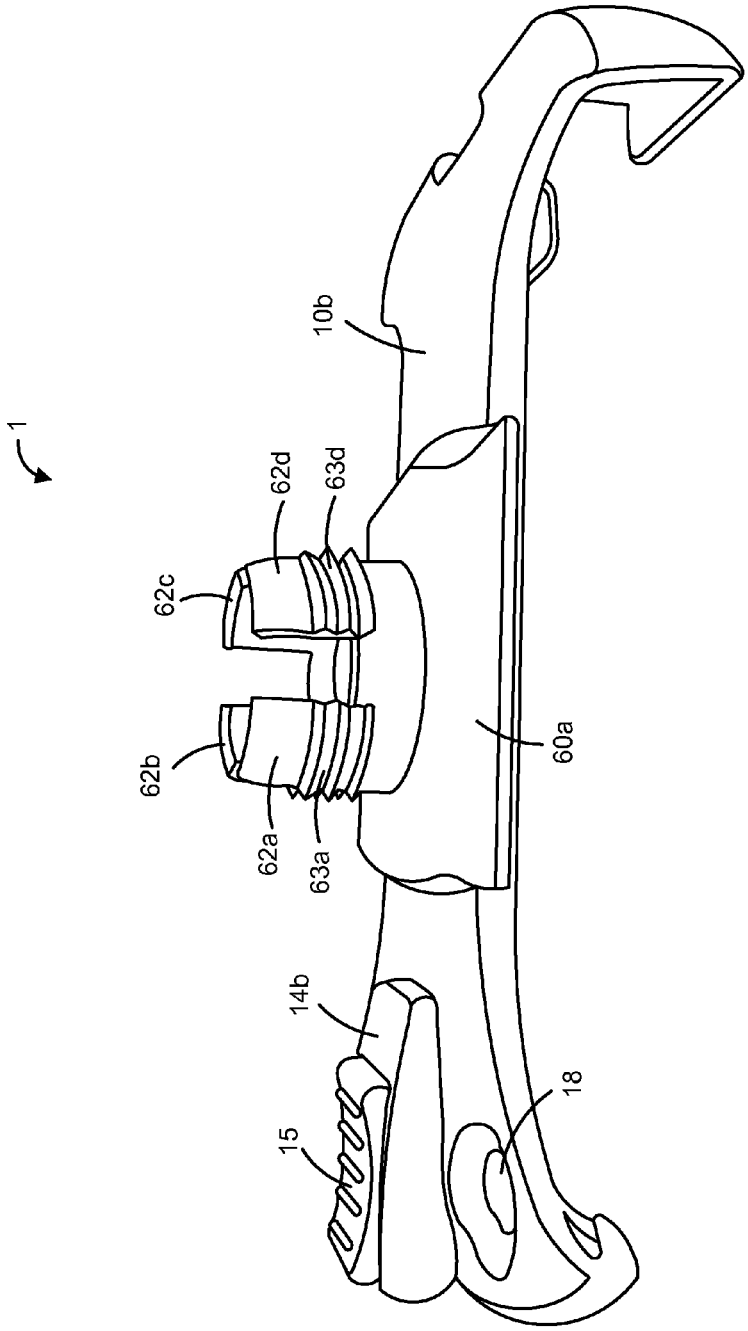

FIG. 6C

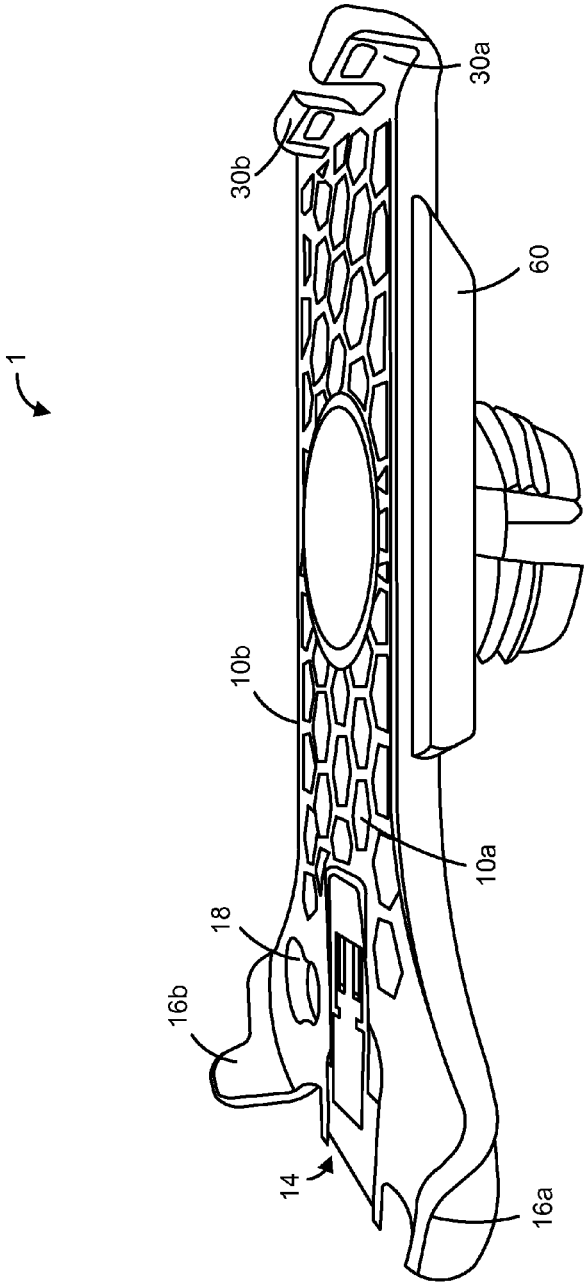

FIG. 6D

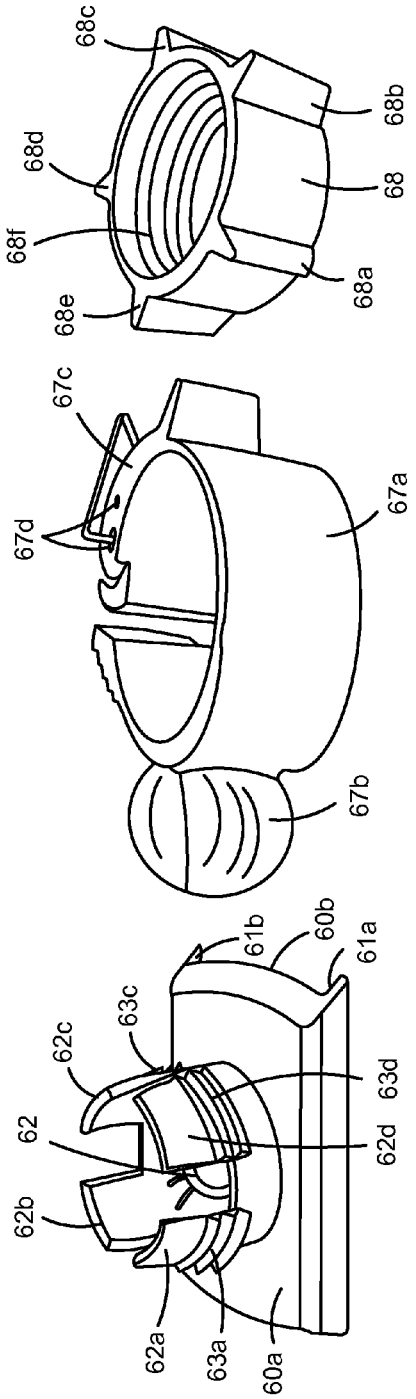
68c
68d
68f
68e
68b
68
68a
67c
67d
67a
67b
61b
60b
61a
63c
62c
62
62b
63d
62d
62a
63a
60a

FIG. 6E

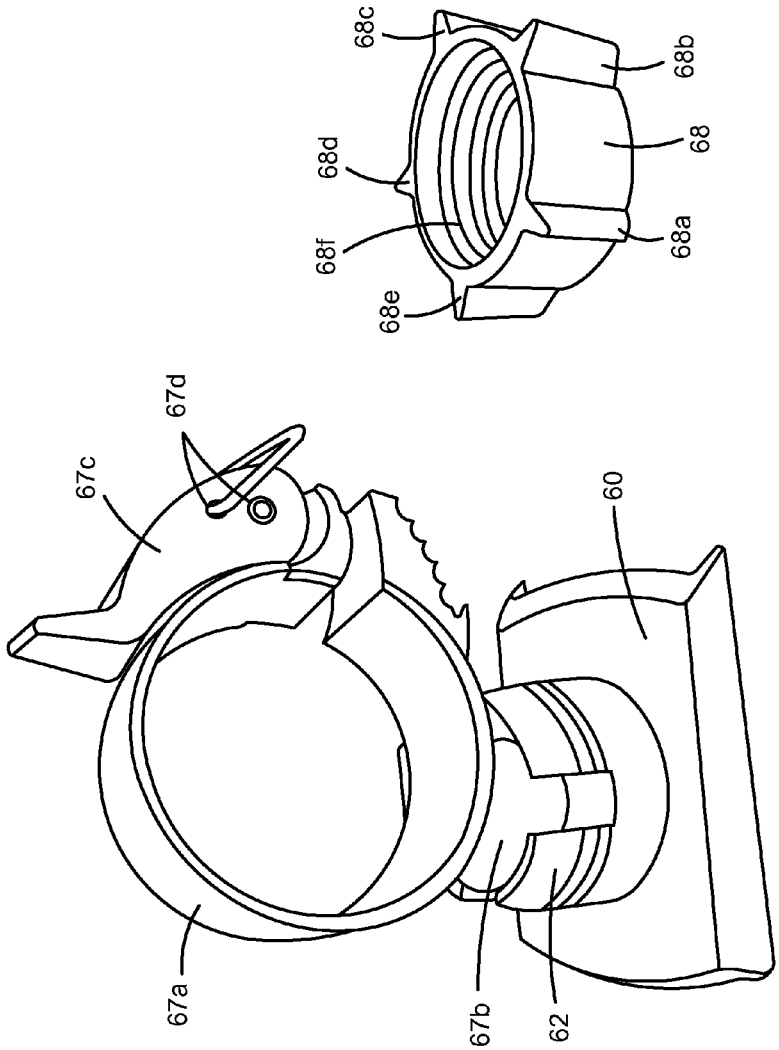

FIG. 6F

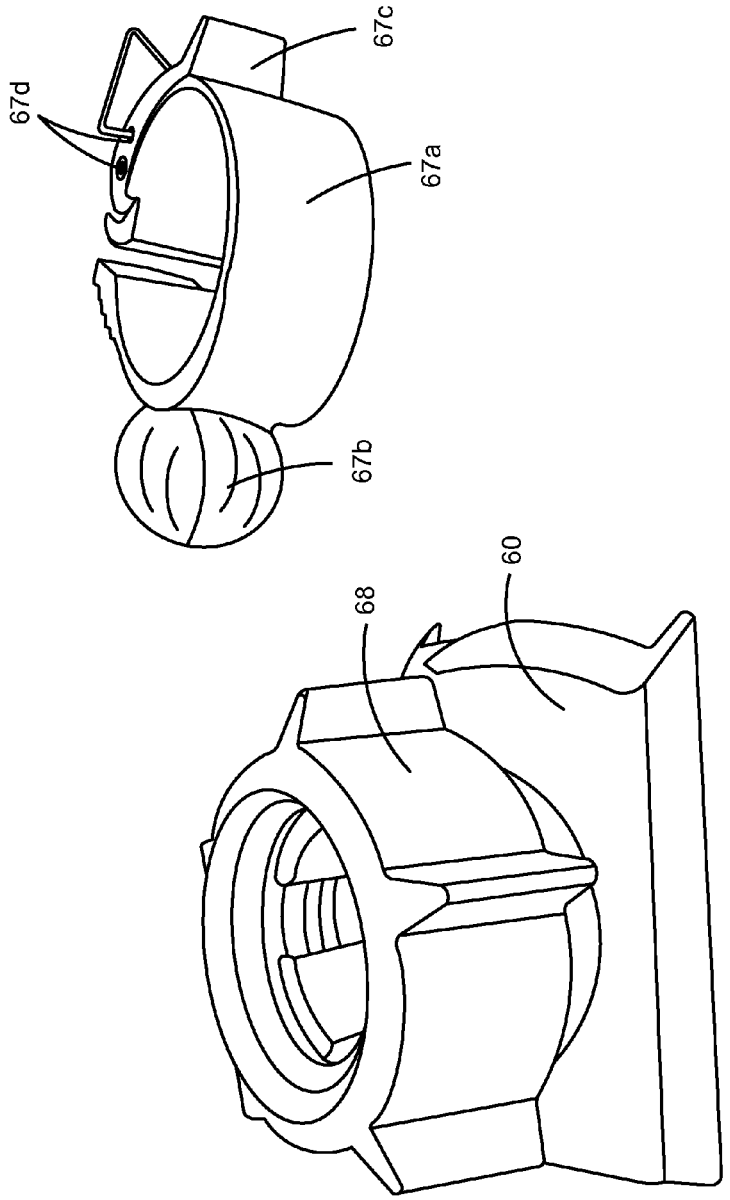

FIG. 6G

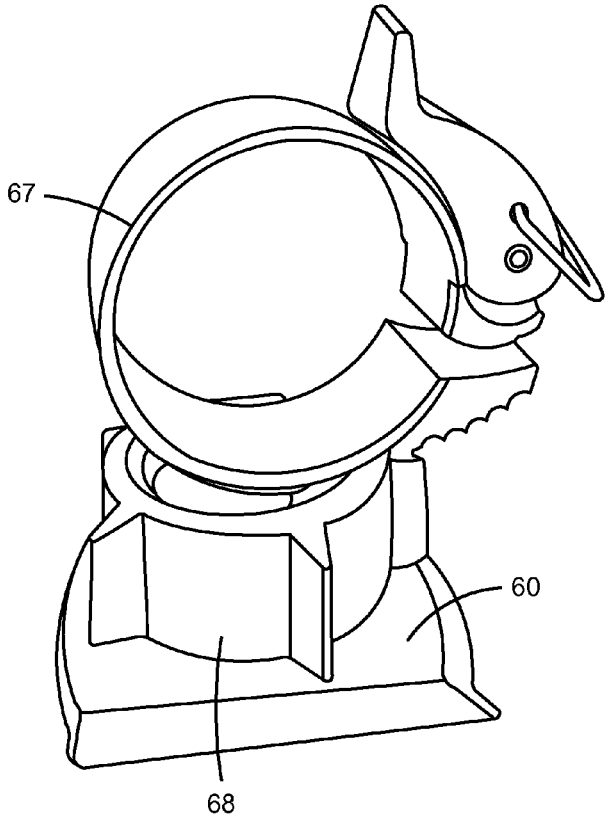

FIG. 6H

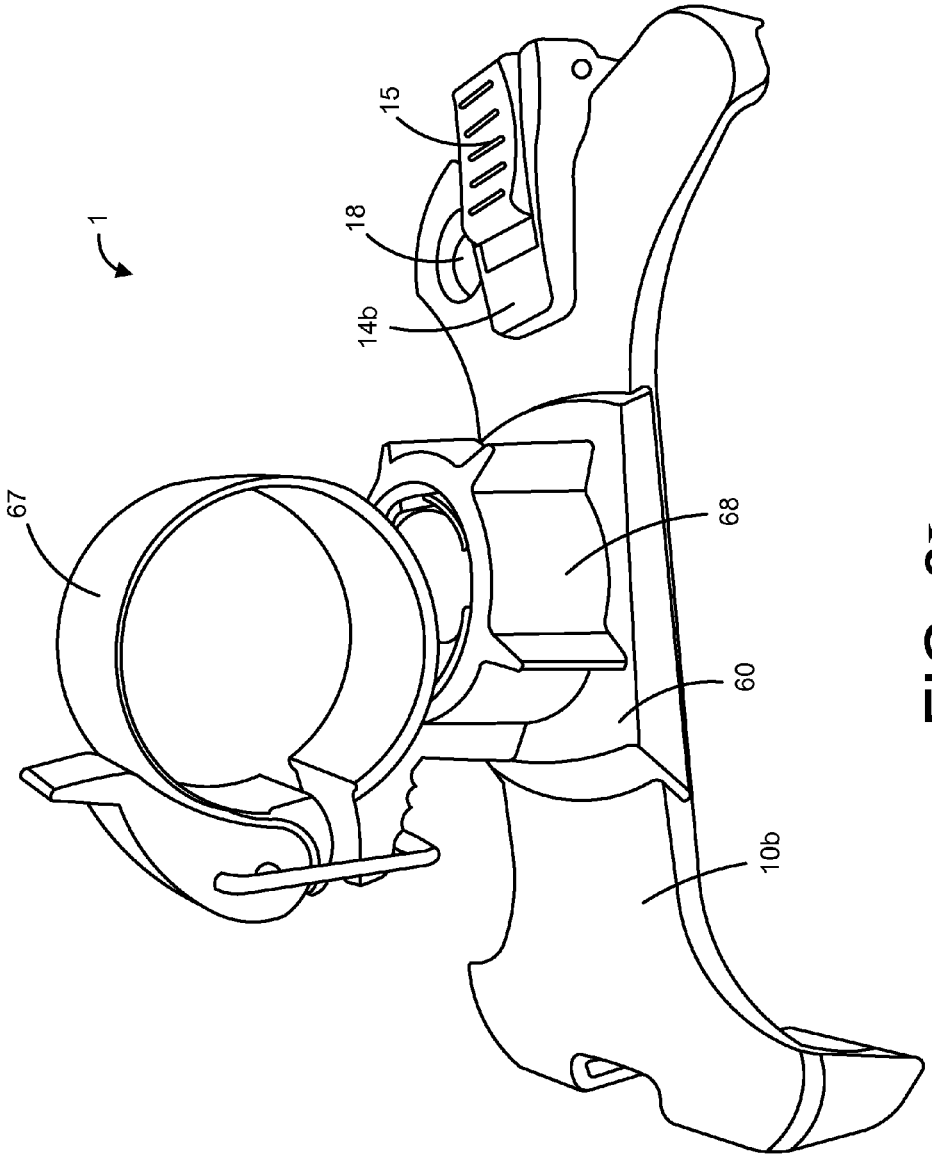

FIG. 6I

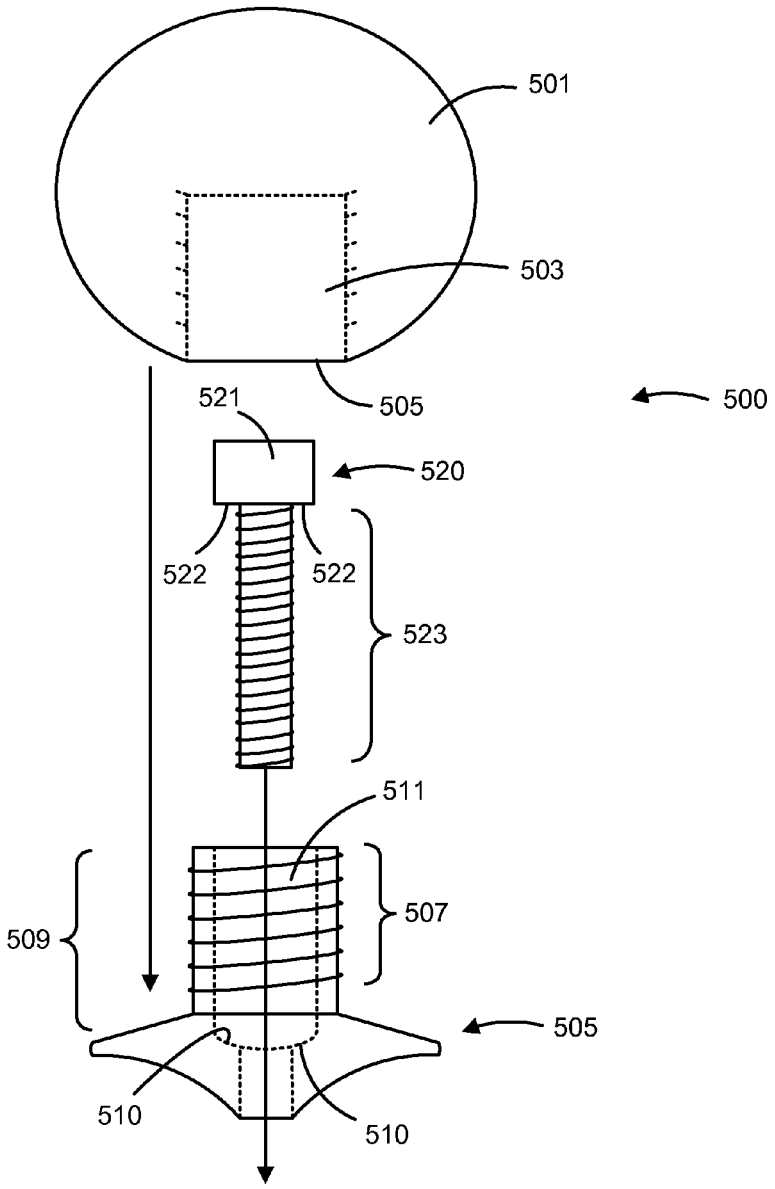

FIG. 6J

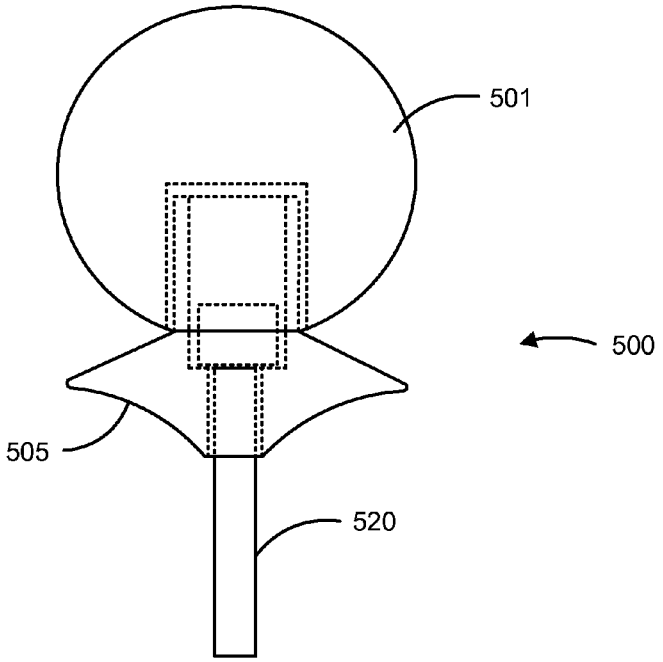

FIG. 6K

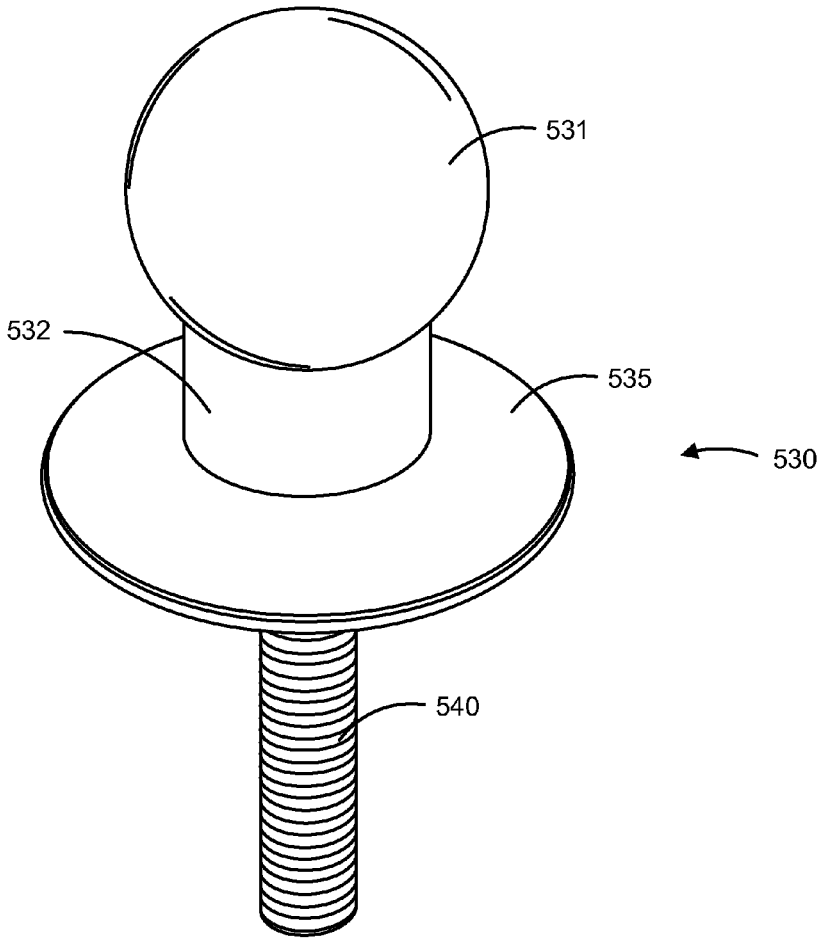

FIG. 6L

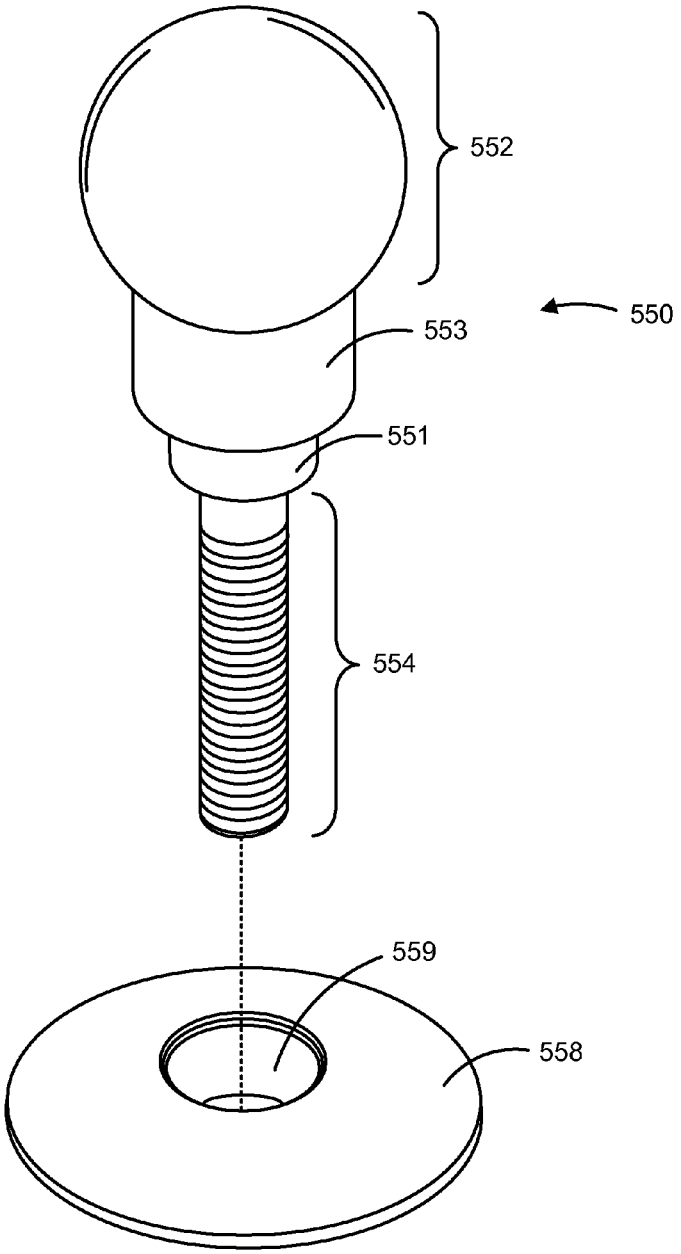

FIG. 6M

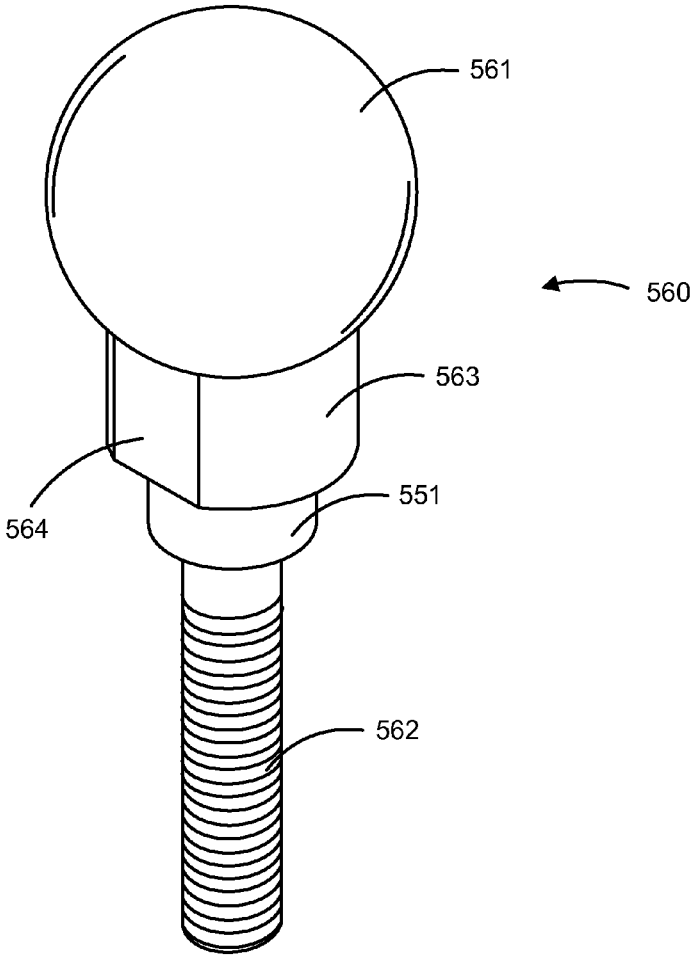

FIG. 6N

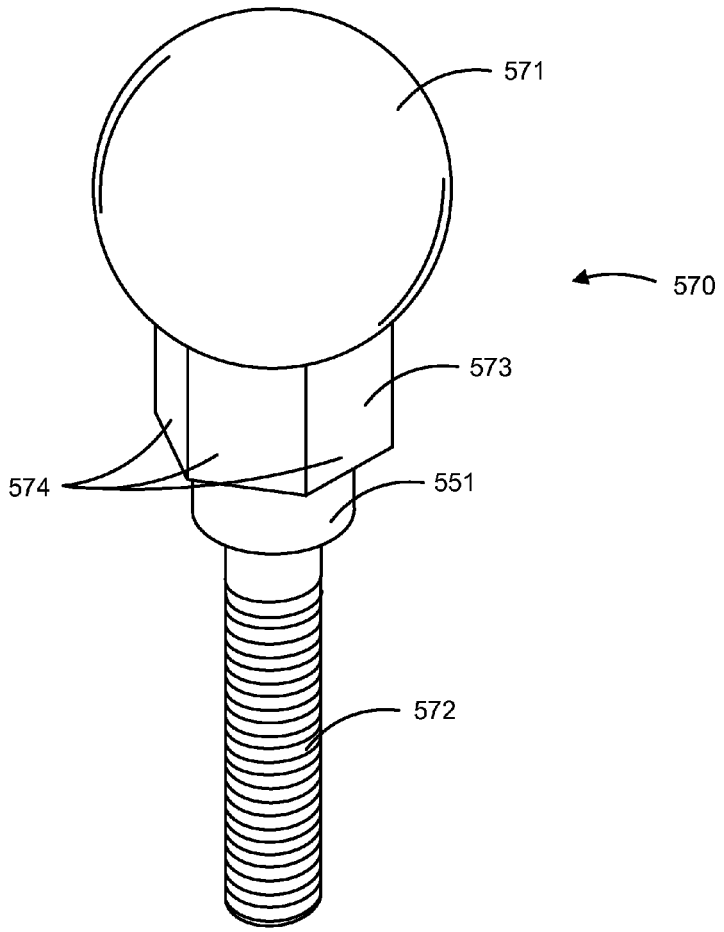

FIG. 6O

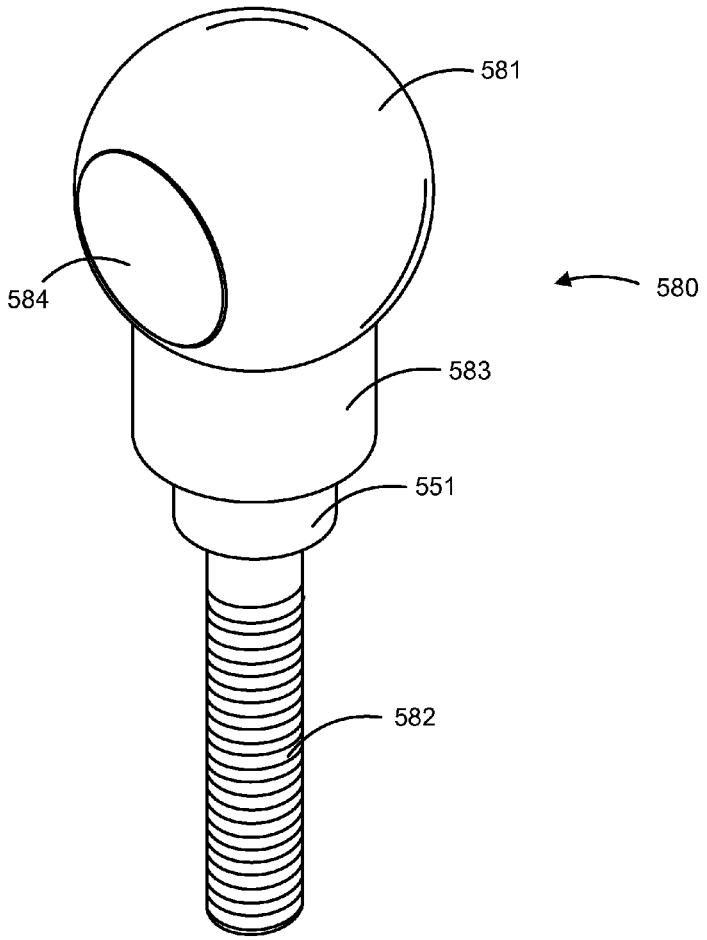

FIG. 6P

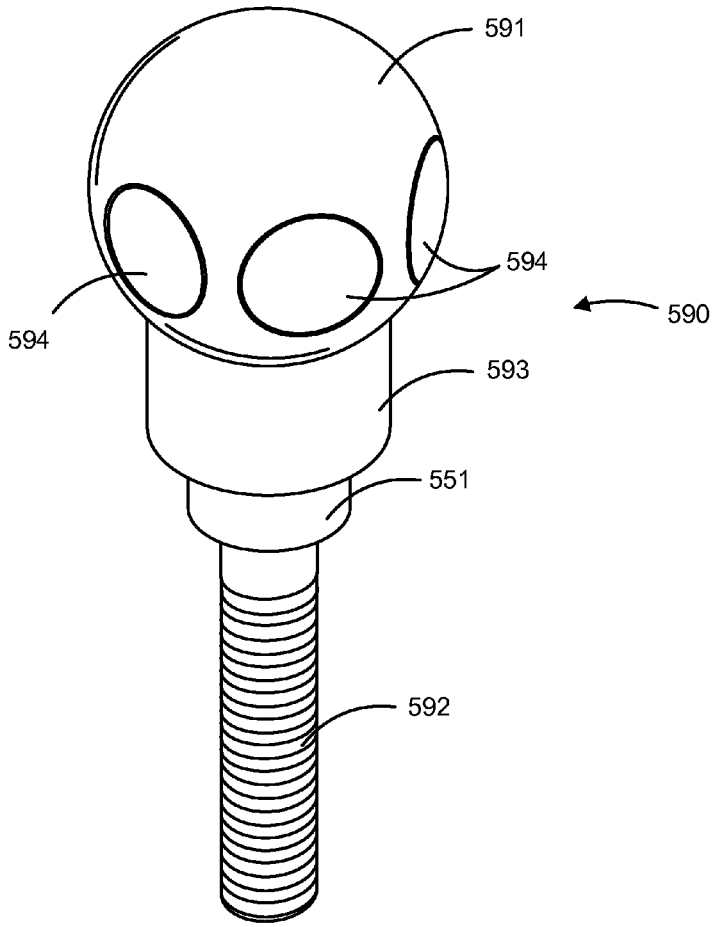

FIG. 6Q

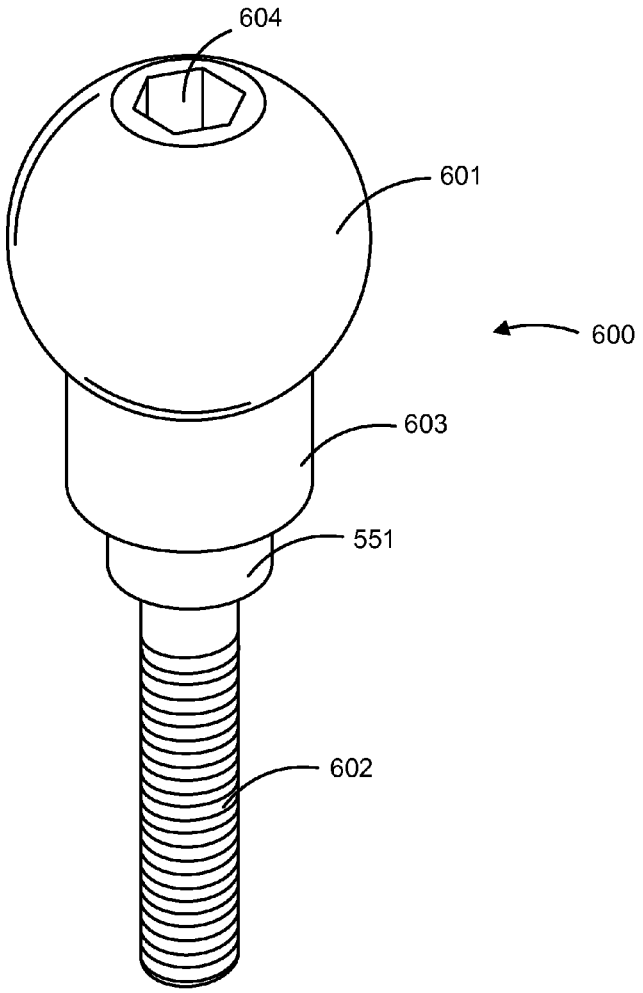

FIG. 6R

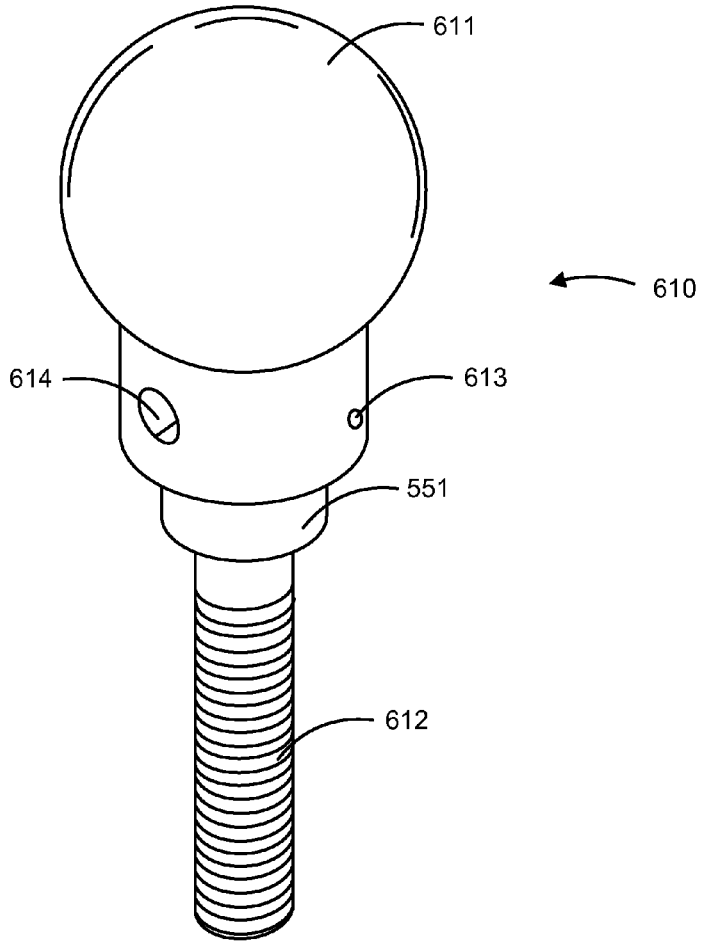

FIG. 6S

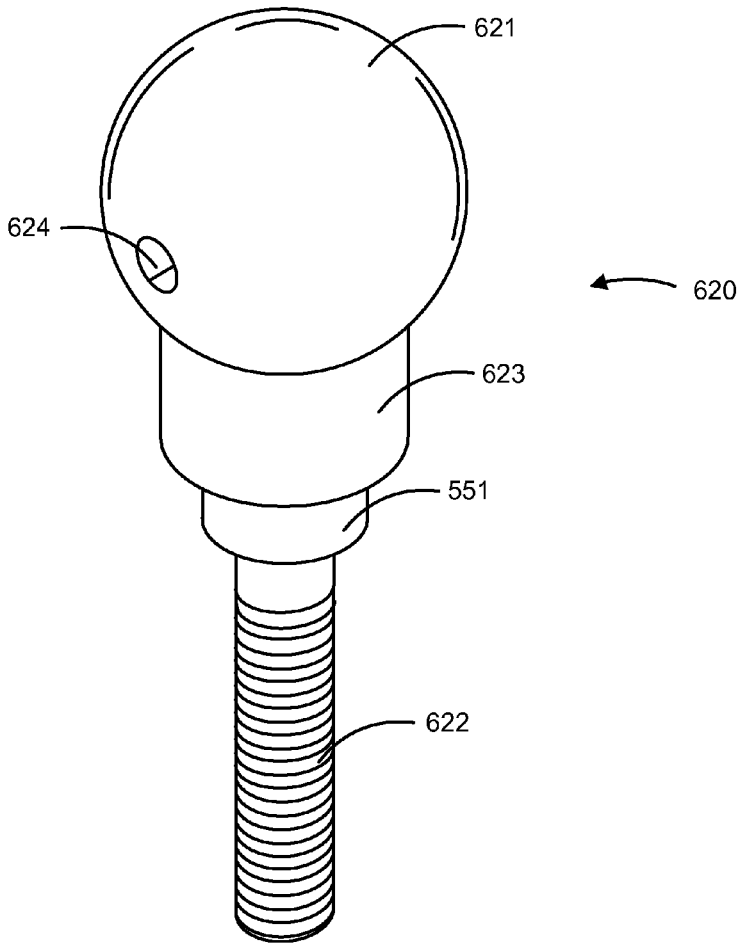

FIG. 6T

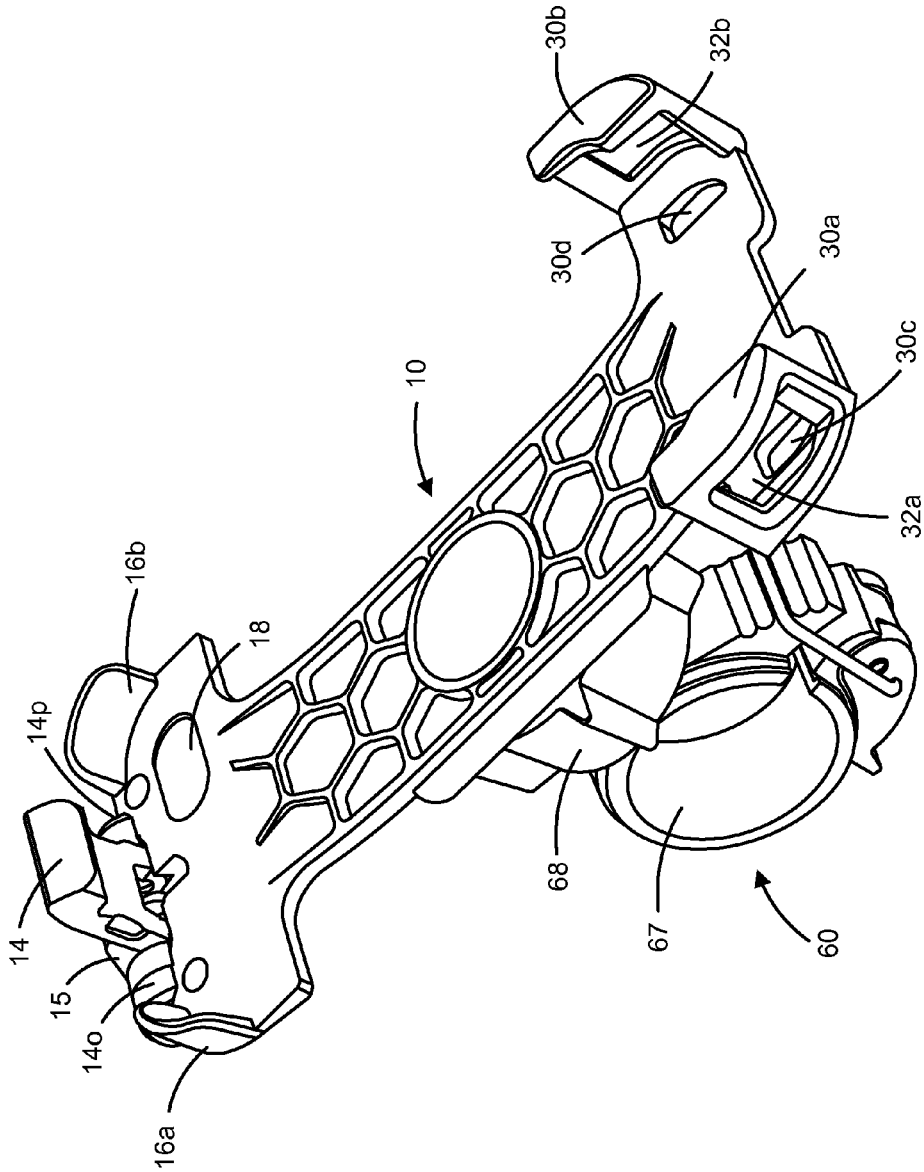

FIG. 6U

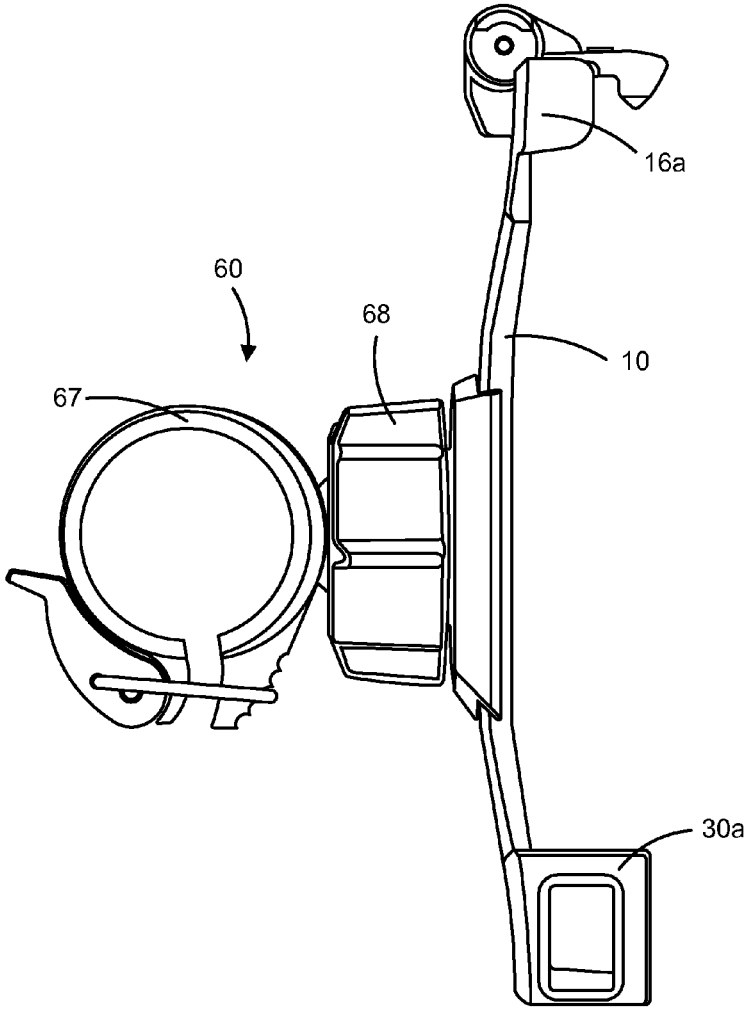

FIG. 6V

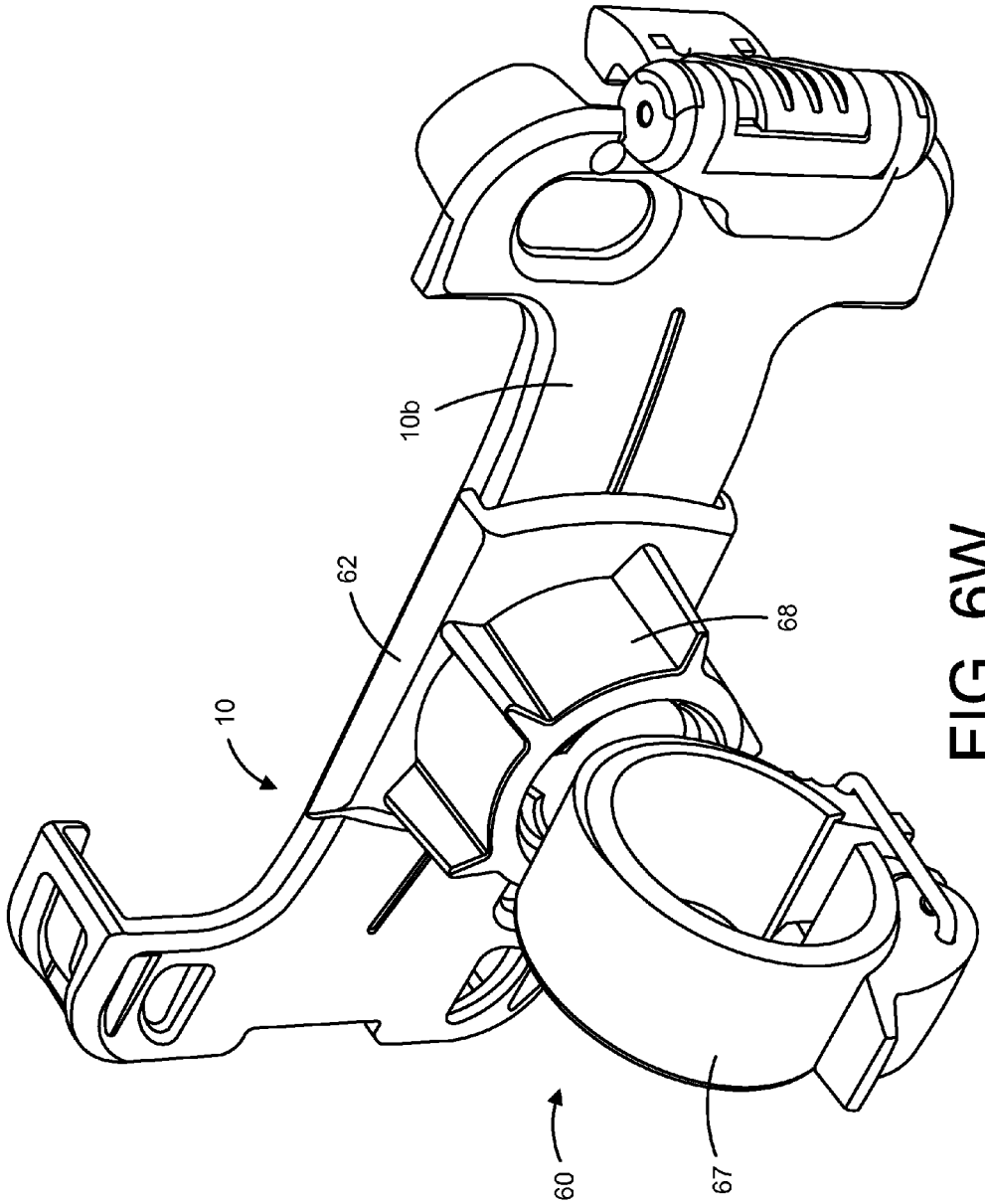

FIG. 6W

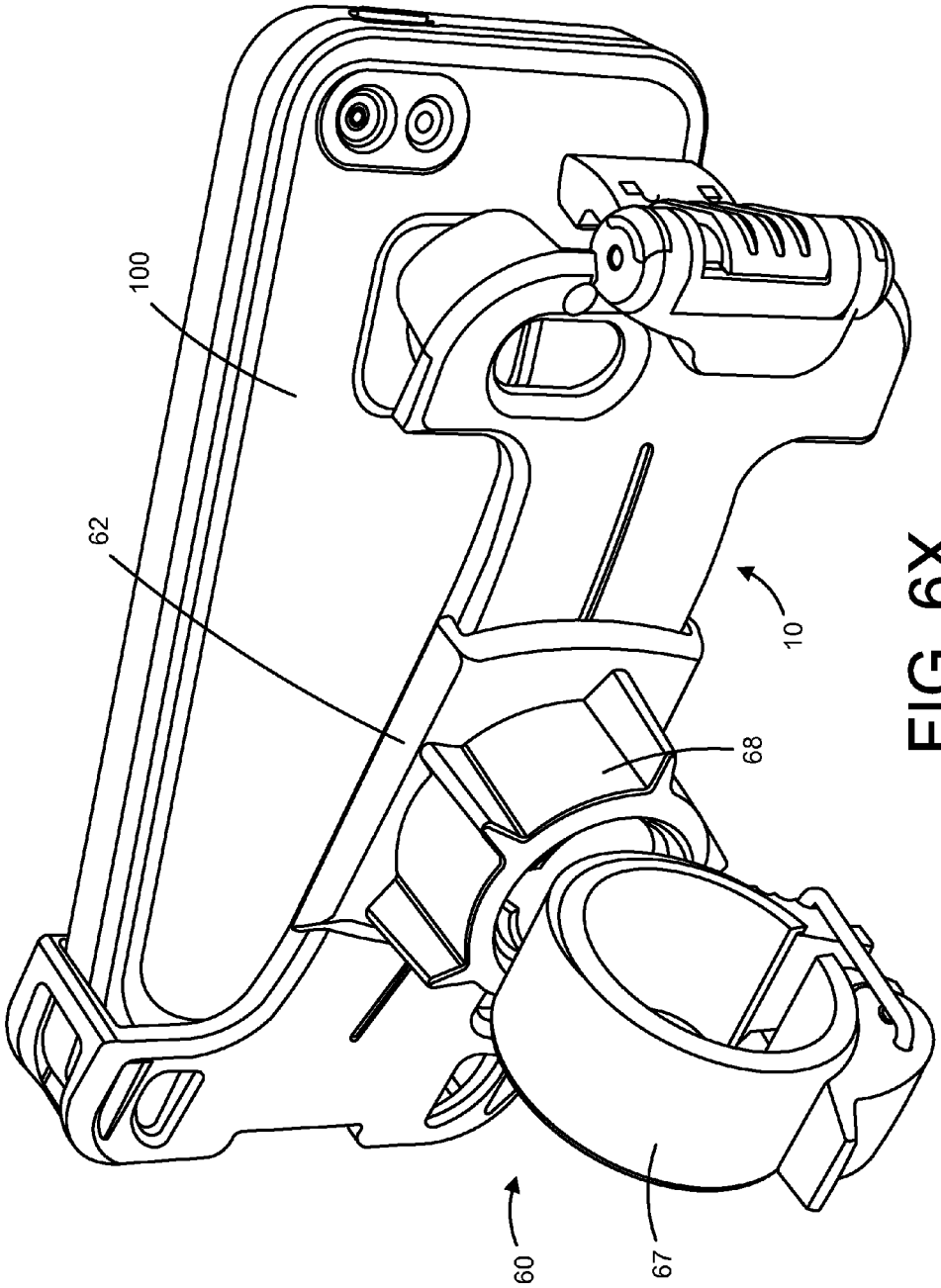

FIG. 6X

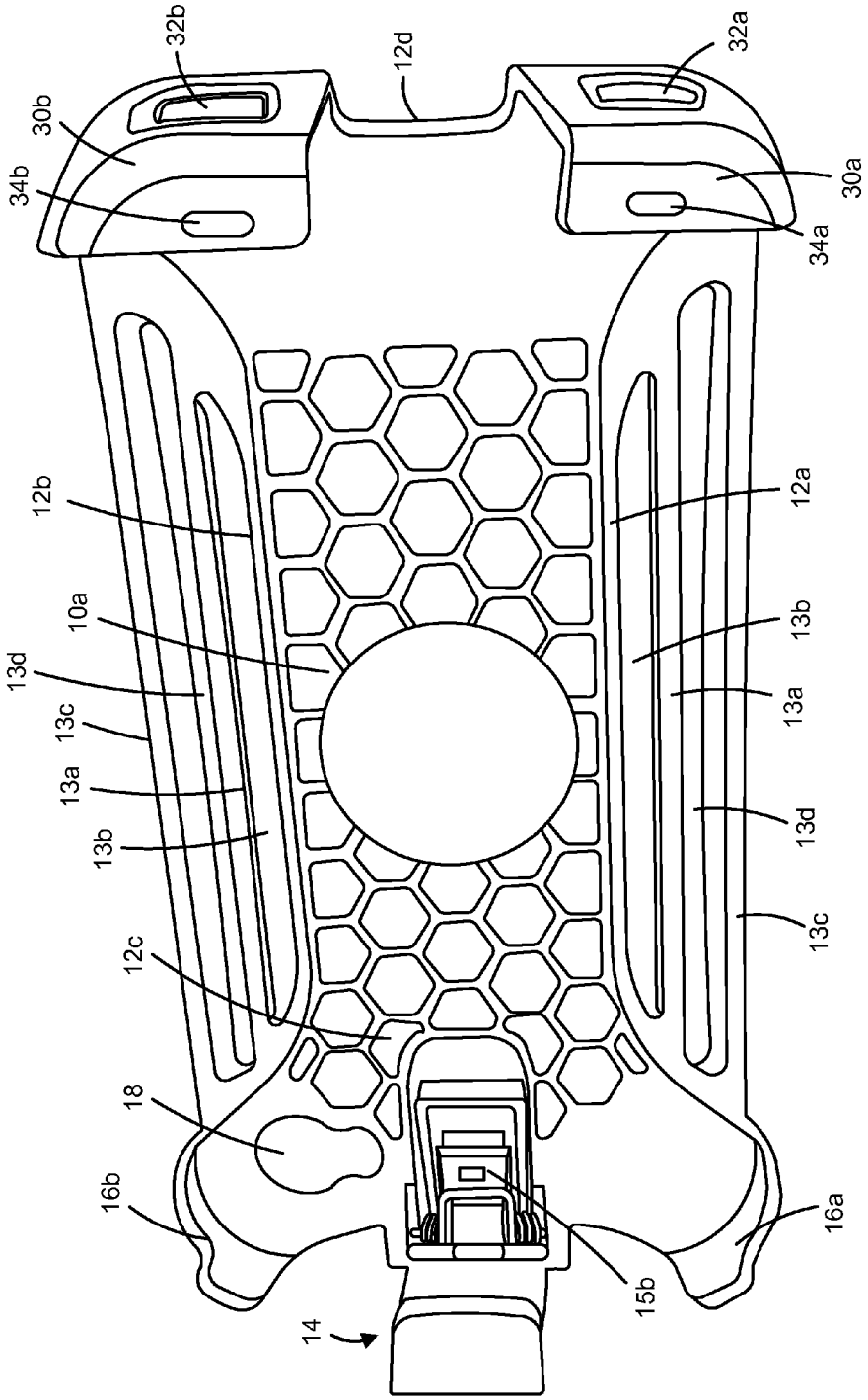
32b
30b
34b
12d
32a
30a
34a
12b
10a
13d
13c
13a
13b
12c
18
16b
14
15b
16a
12a
13b
13a
13d
13c

FIG. 7A

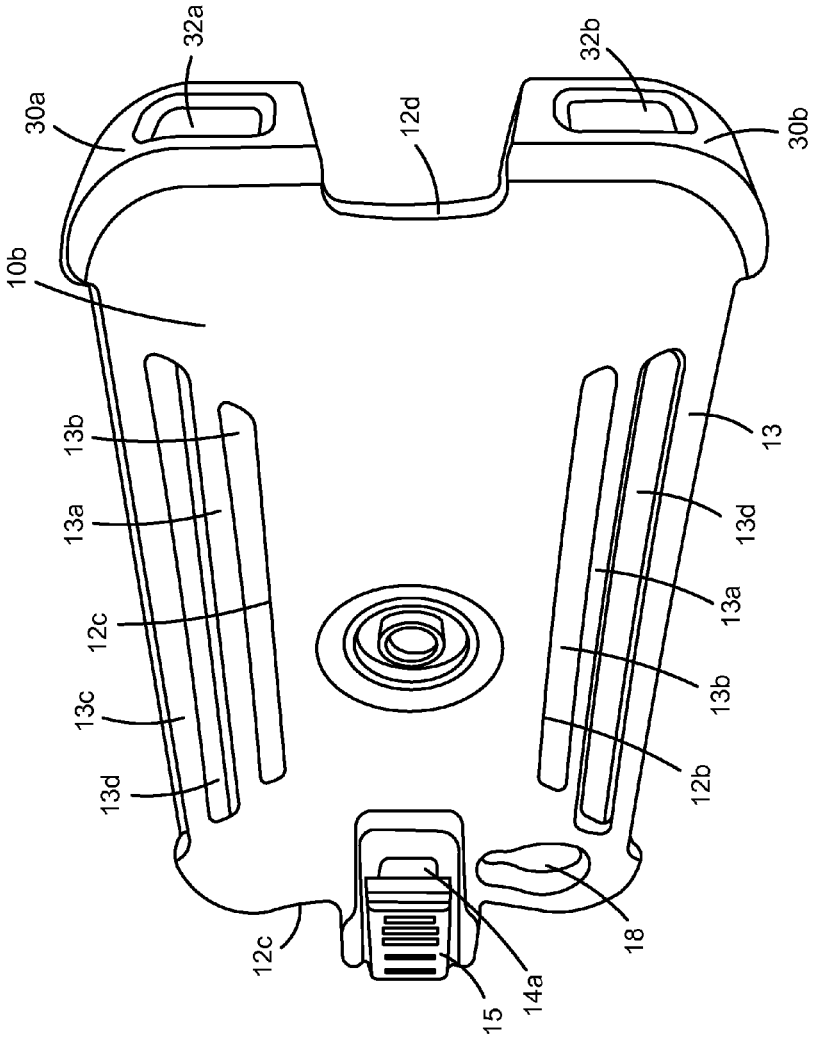
30a
32a
10b
13b
13a
12c
13c
13d
12c
15
14a
12d
32b
30b
13
13d
13a
13b
12b
18

FIG. 7B

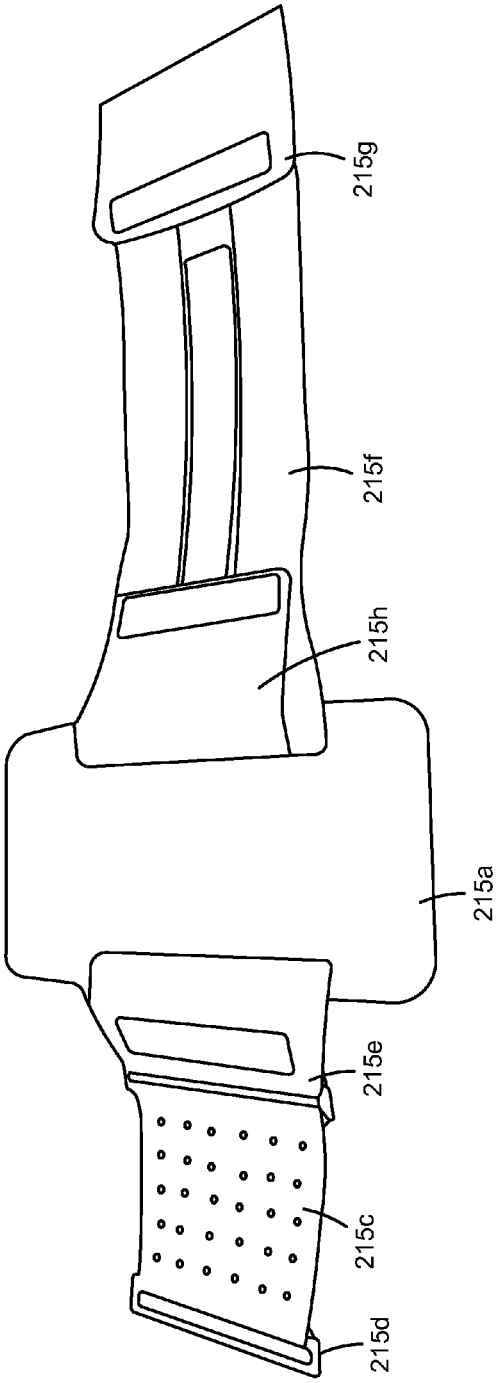

FIG. 7C

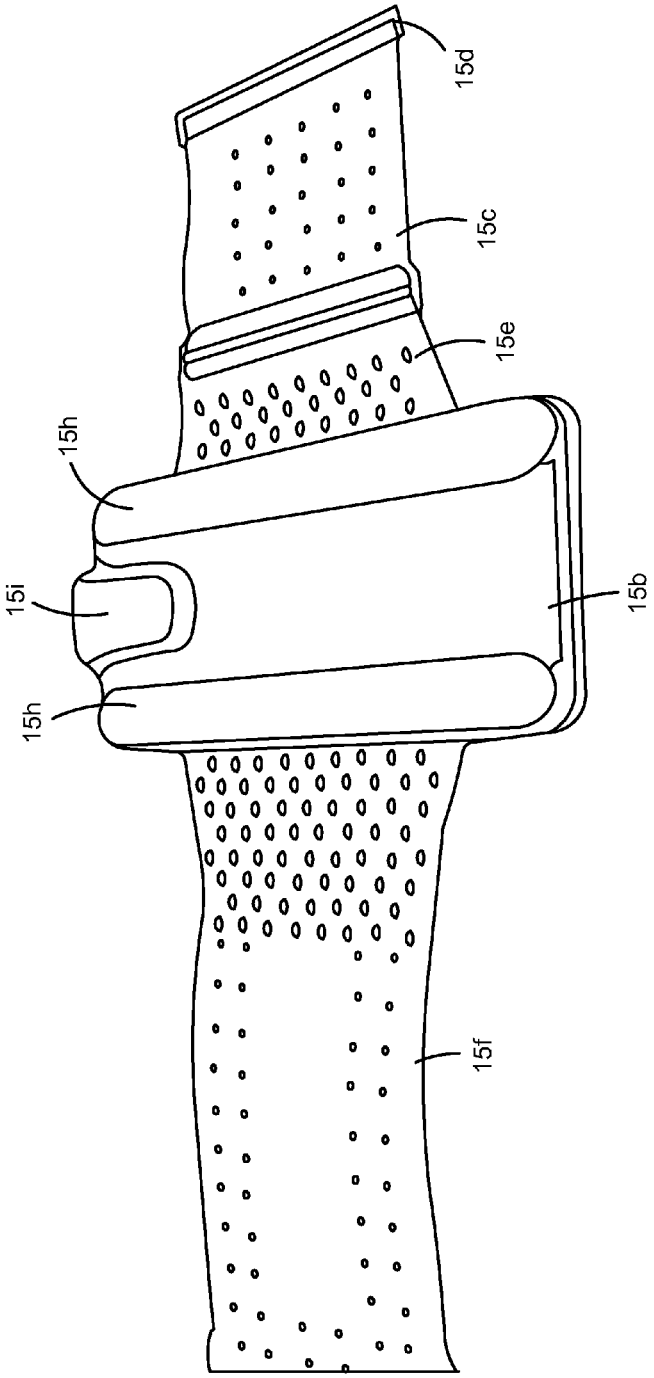

FIG. 7D

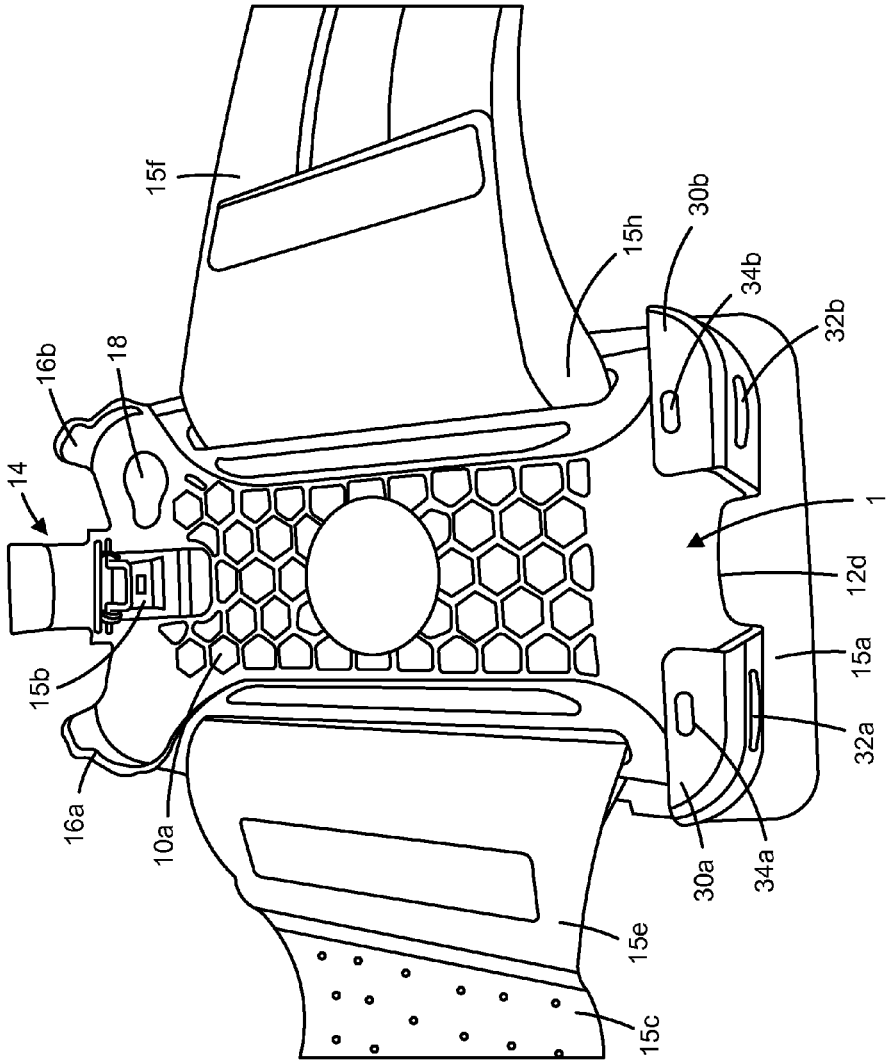
15f
16b
18
14
15b
16a
10a
15h
30b
34b
32b
1
12d
15a
32a
30a
34a
15e
15c

FIG. 7E

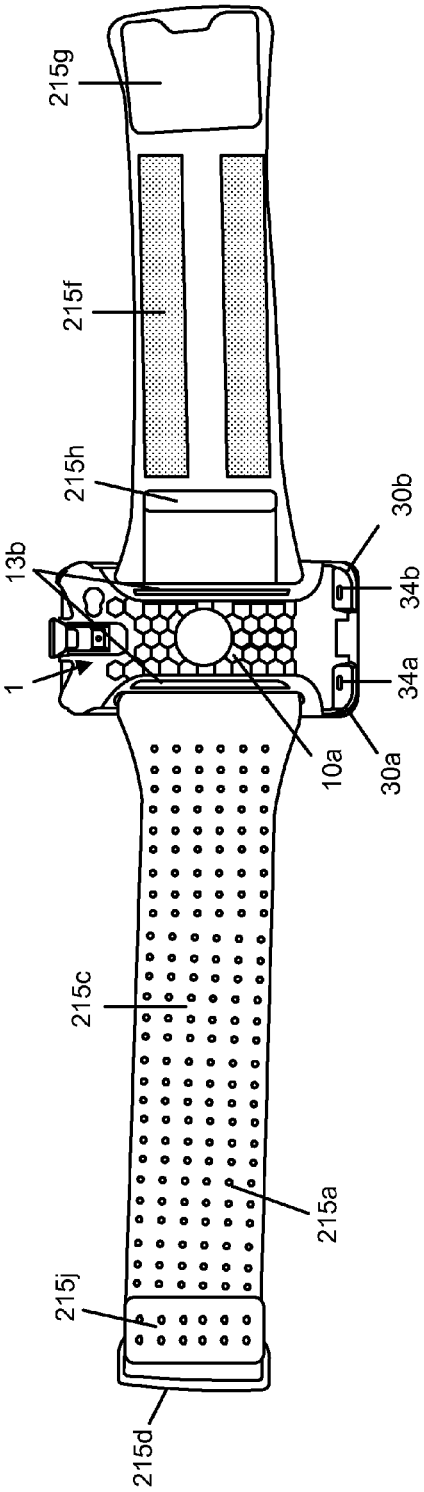

FIG. 7F(a)

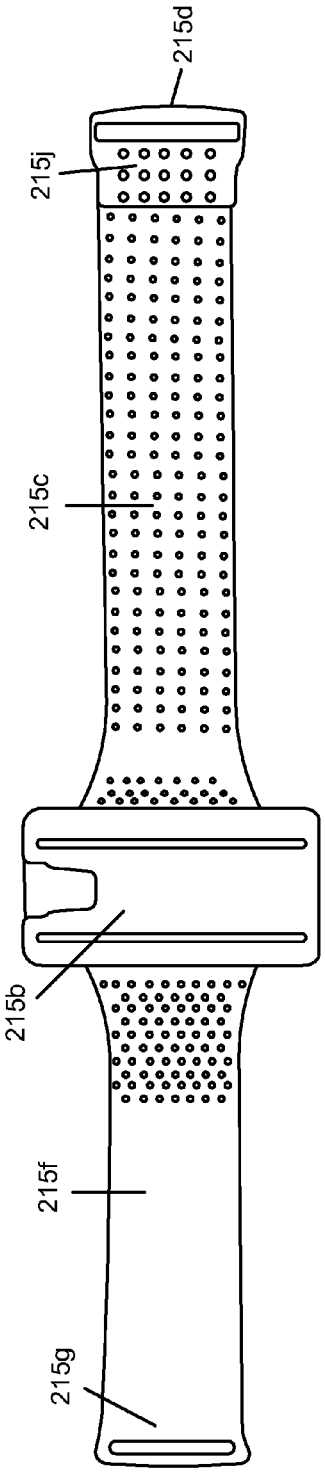

FIG. 7F(b)

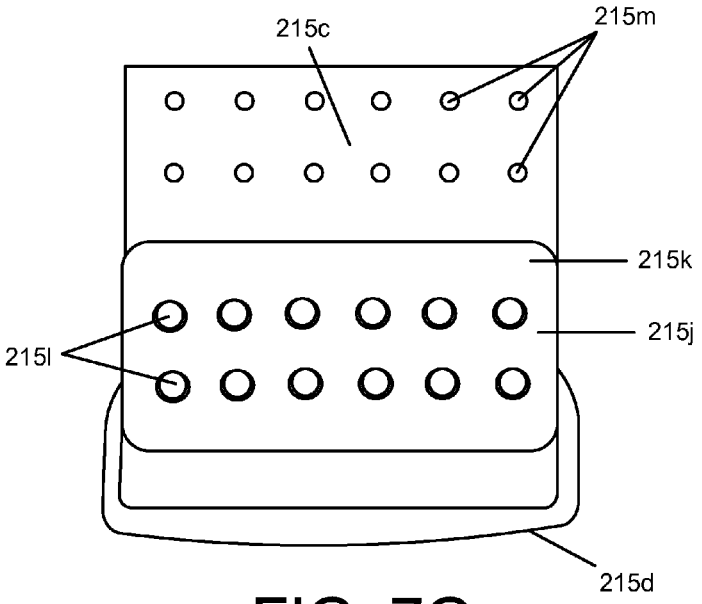
215c
215m
215k
215j
215l
215d

FIG. 7G

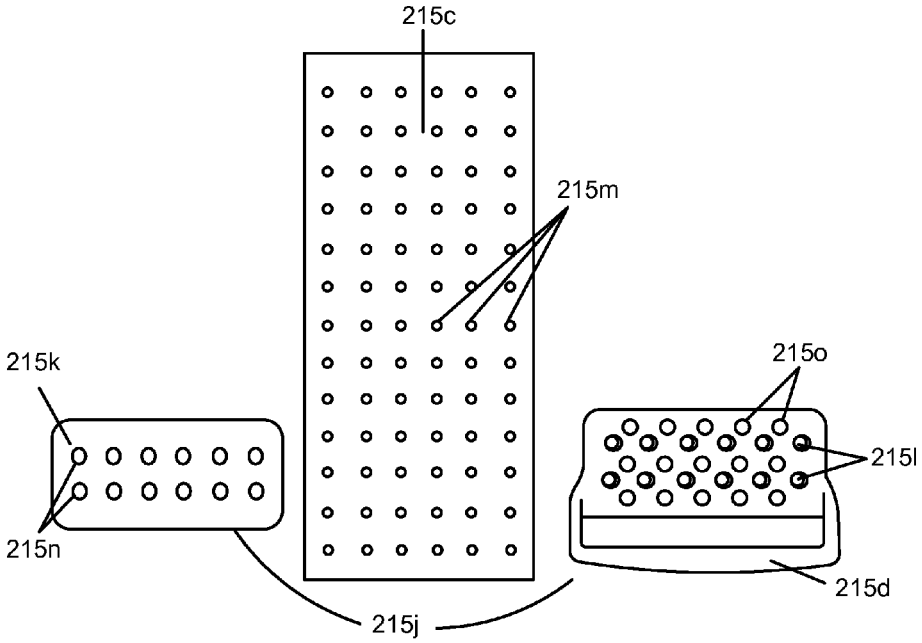
215c
215m
215k
215o
215l
215n
215d
215j

FIG. 7H

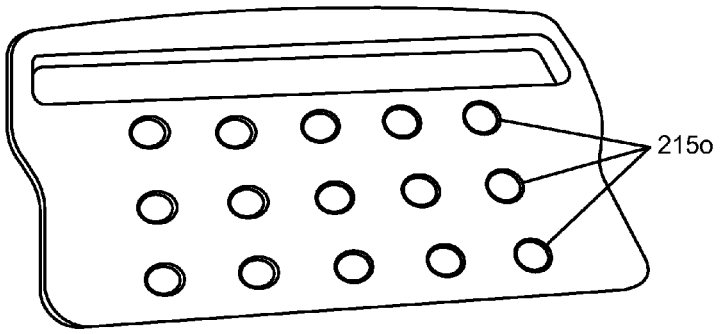

FIG. 7I

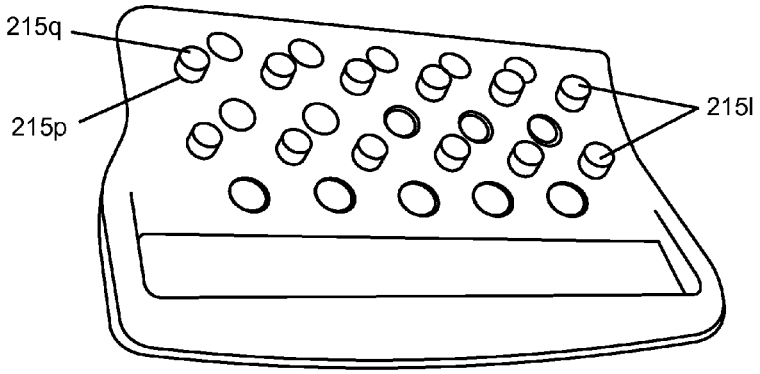

FIG. 7J

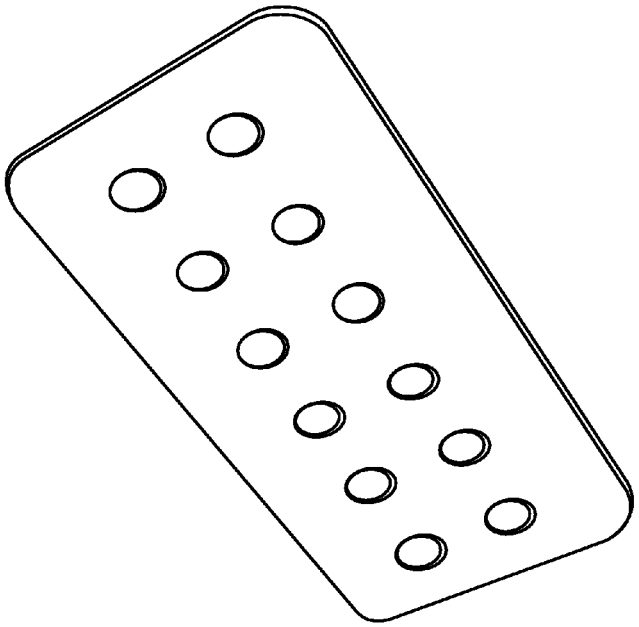

FIG. 7K

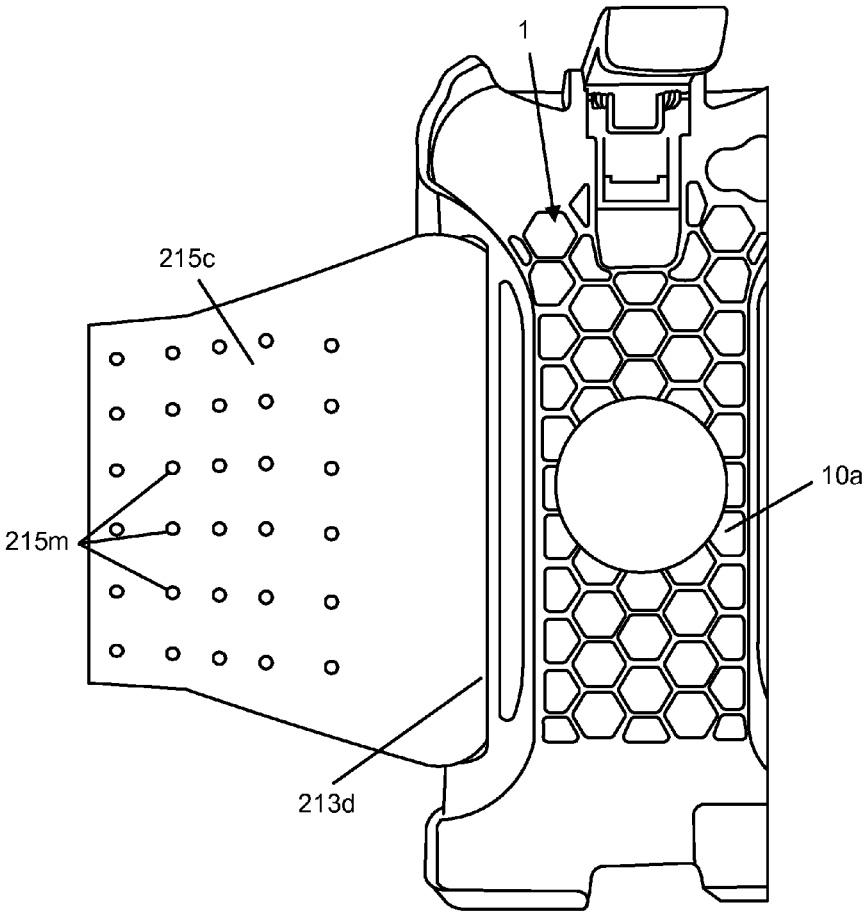

FIG. 7L

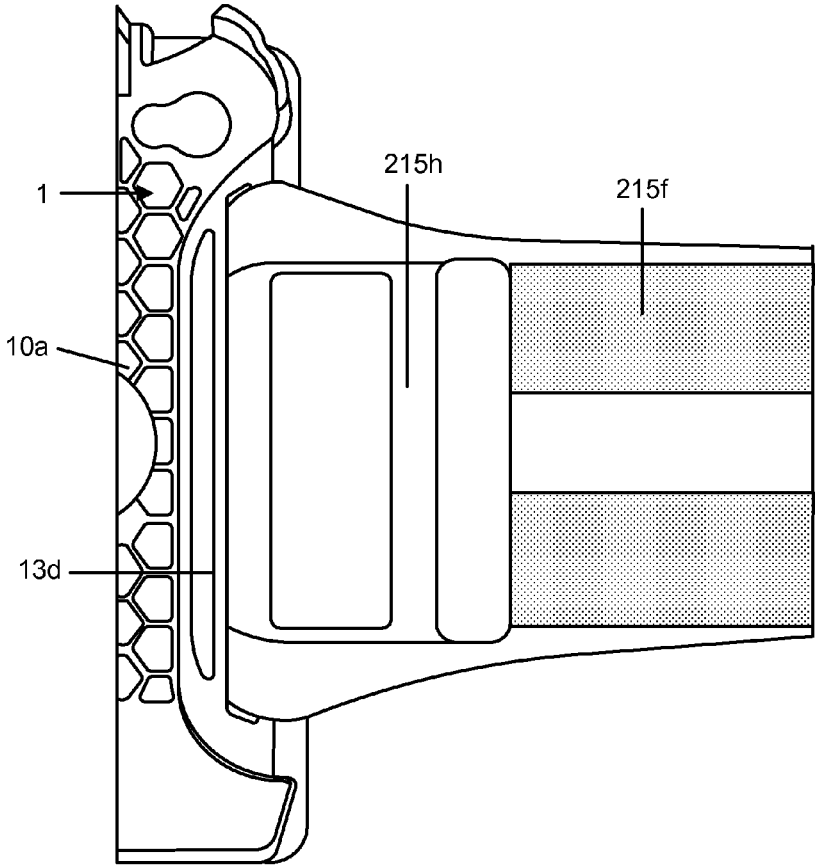

FIG. 7M

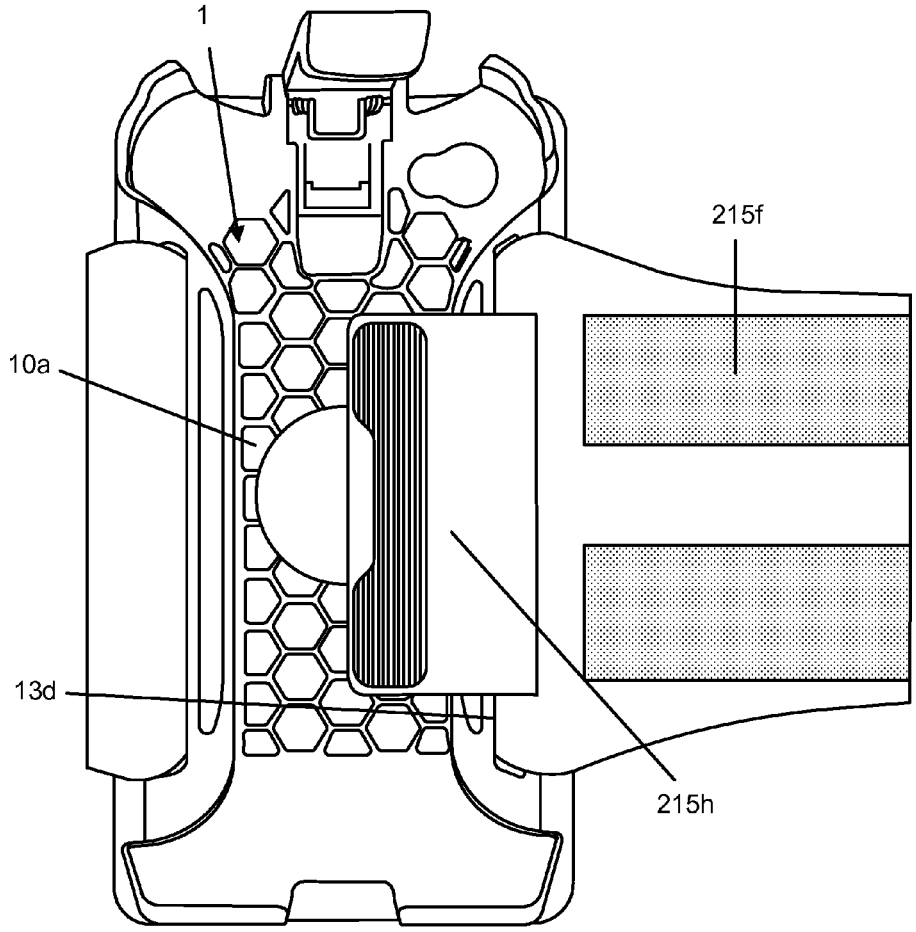

FIG. 7N

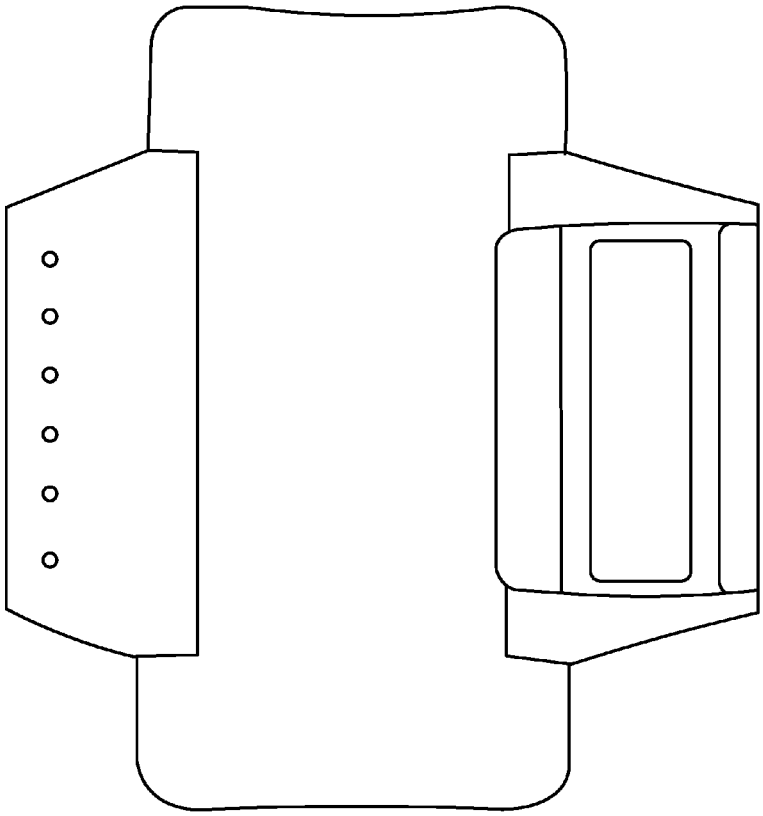

FIG. 7O

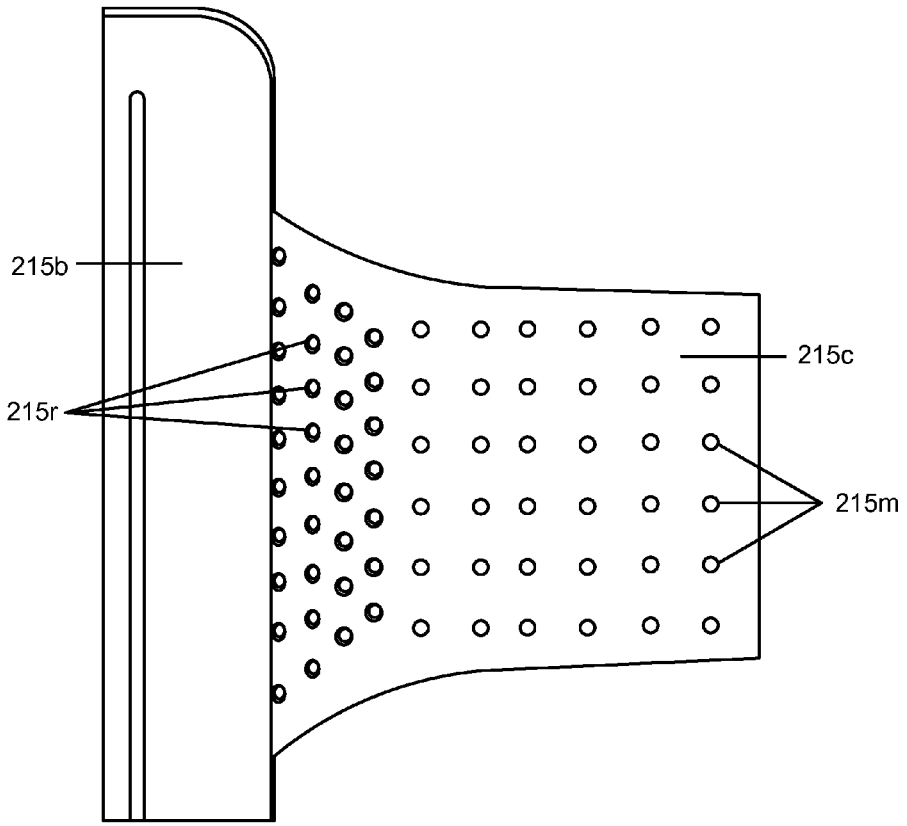

FIG. 7P

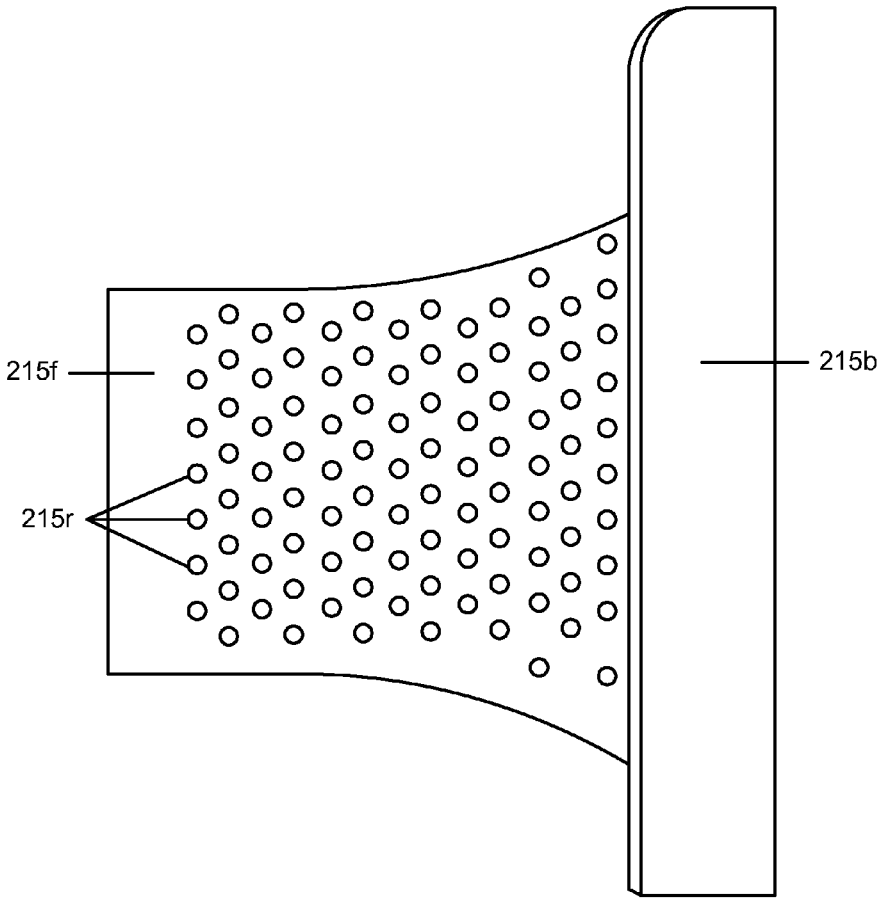

FIG. 7Q

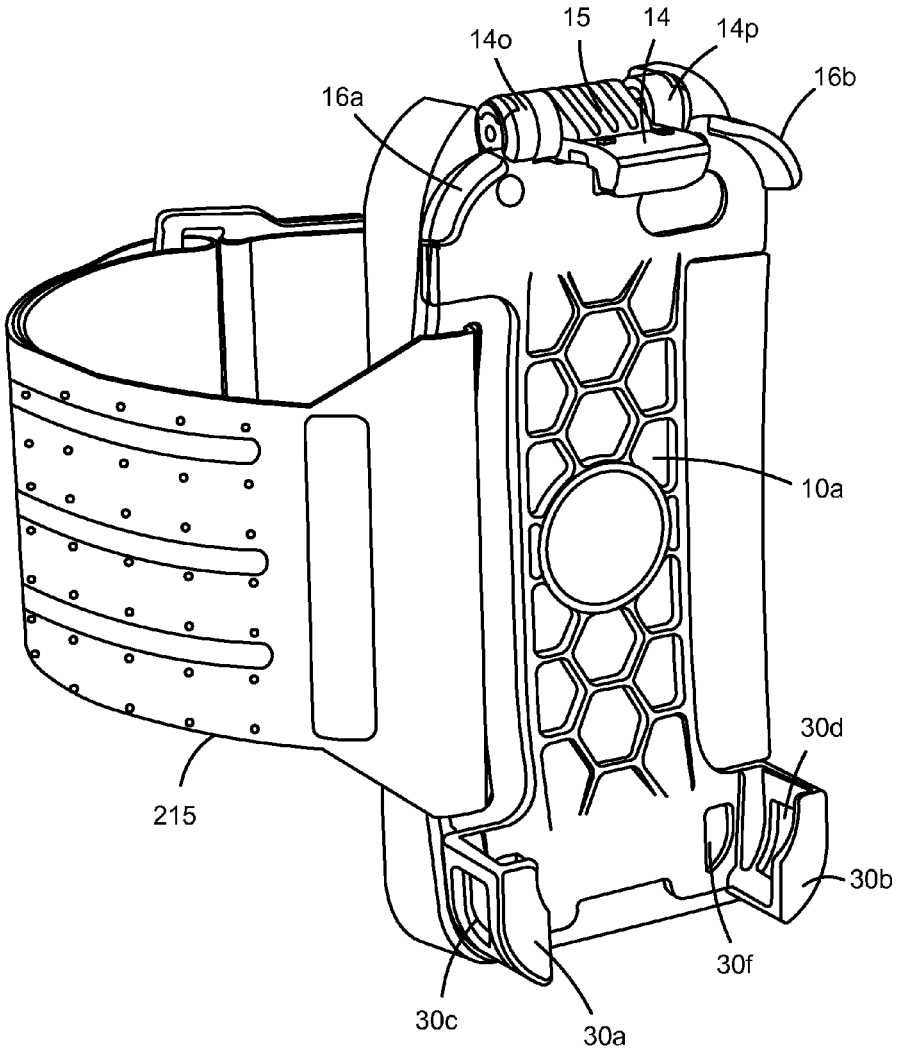

FIG. 7R

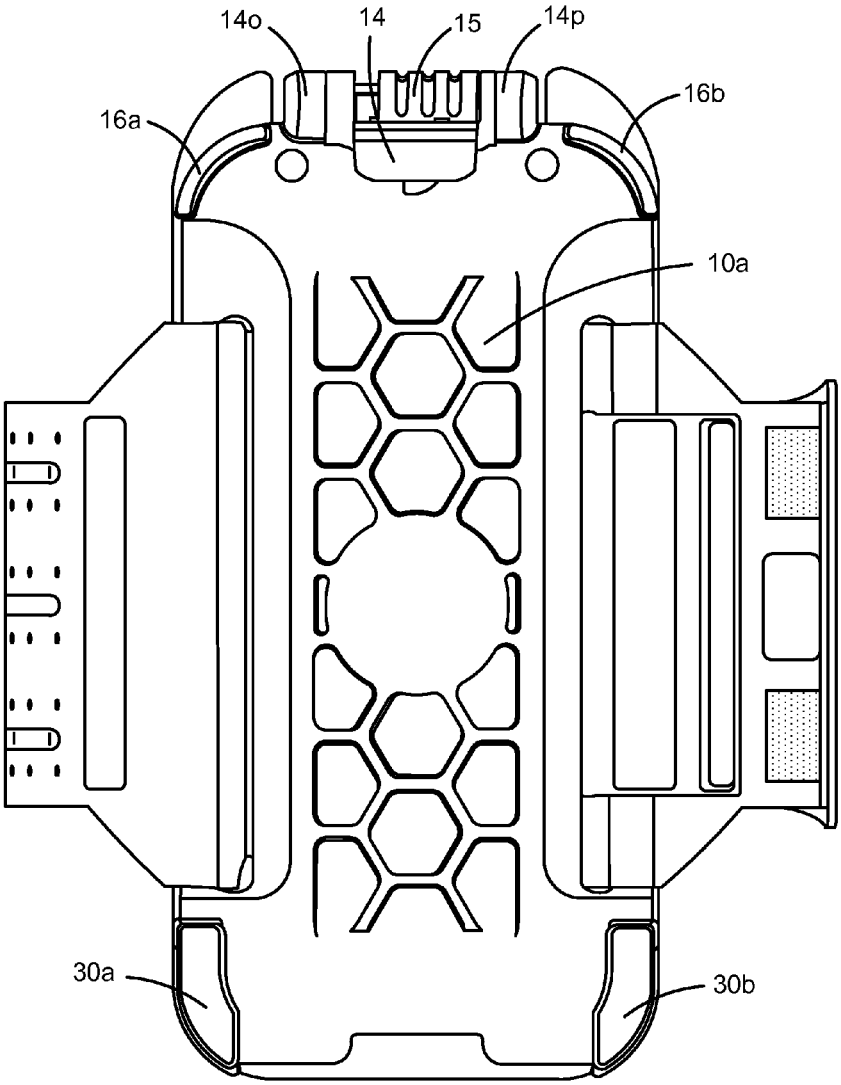

FIG. 7S

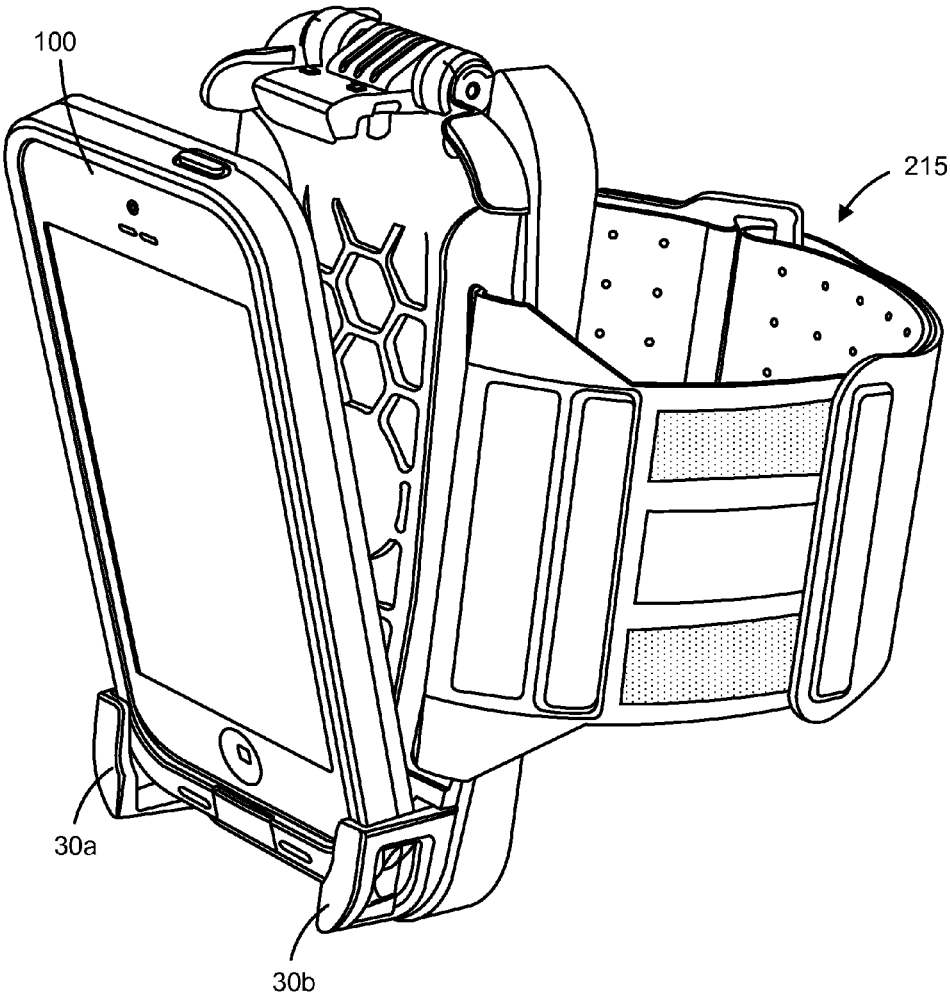

FIG. 7T

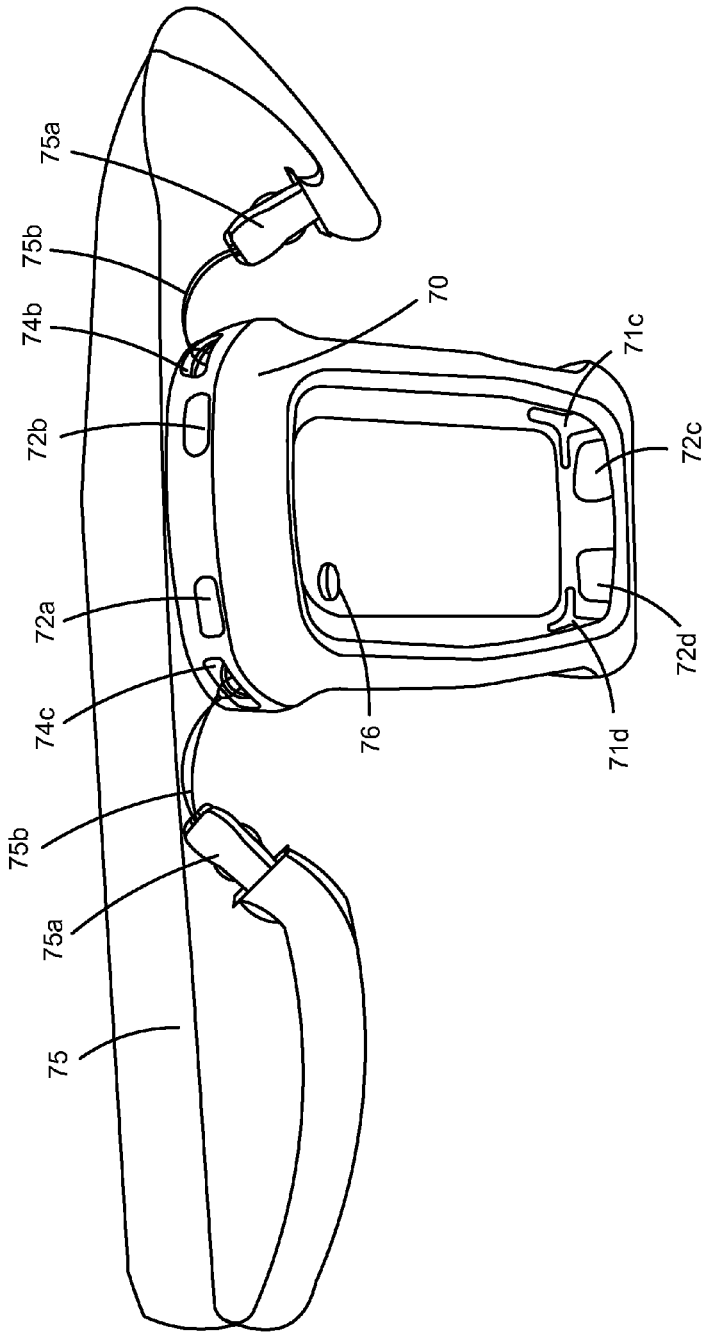

FIG. 8A

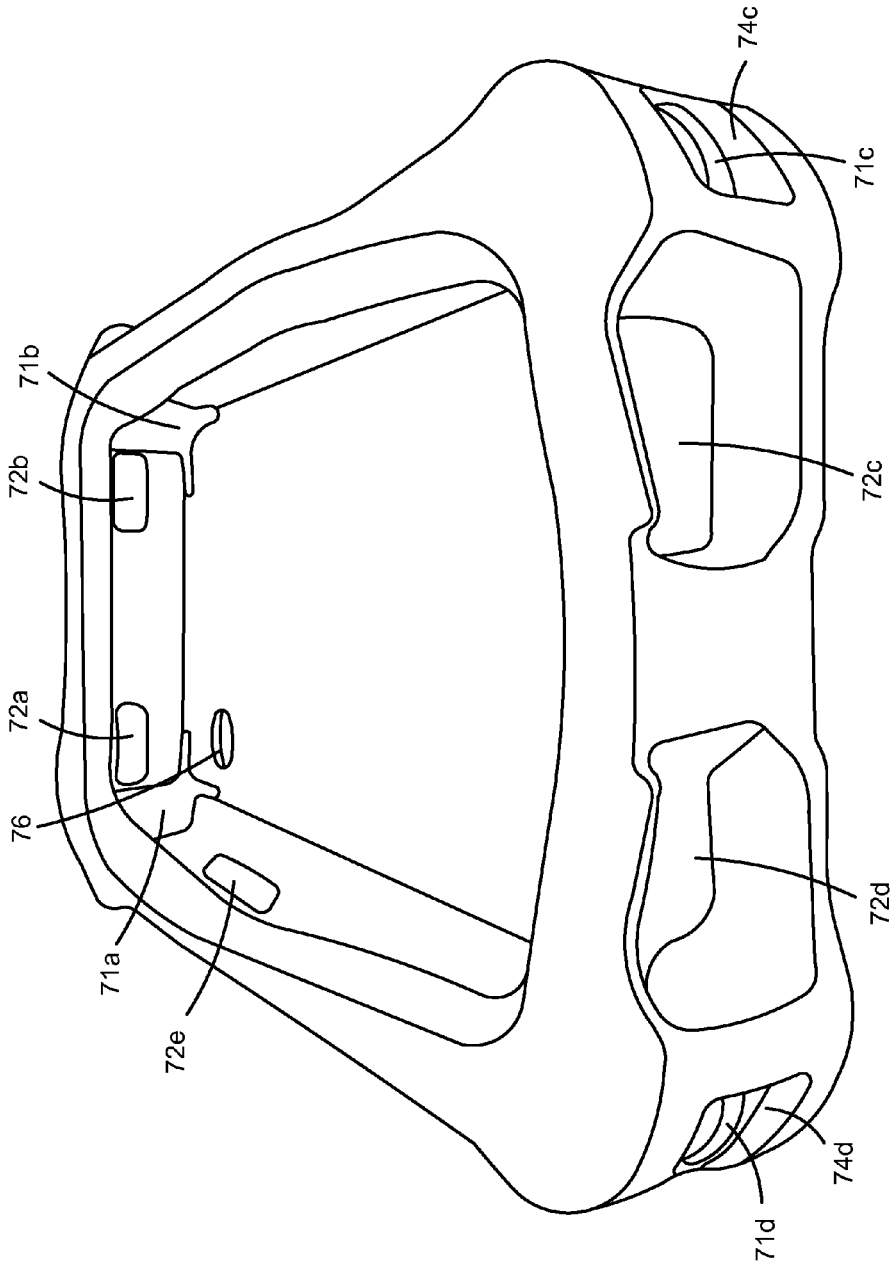

FIG. 8B

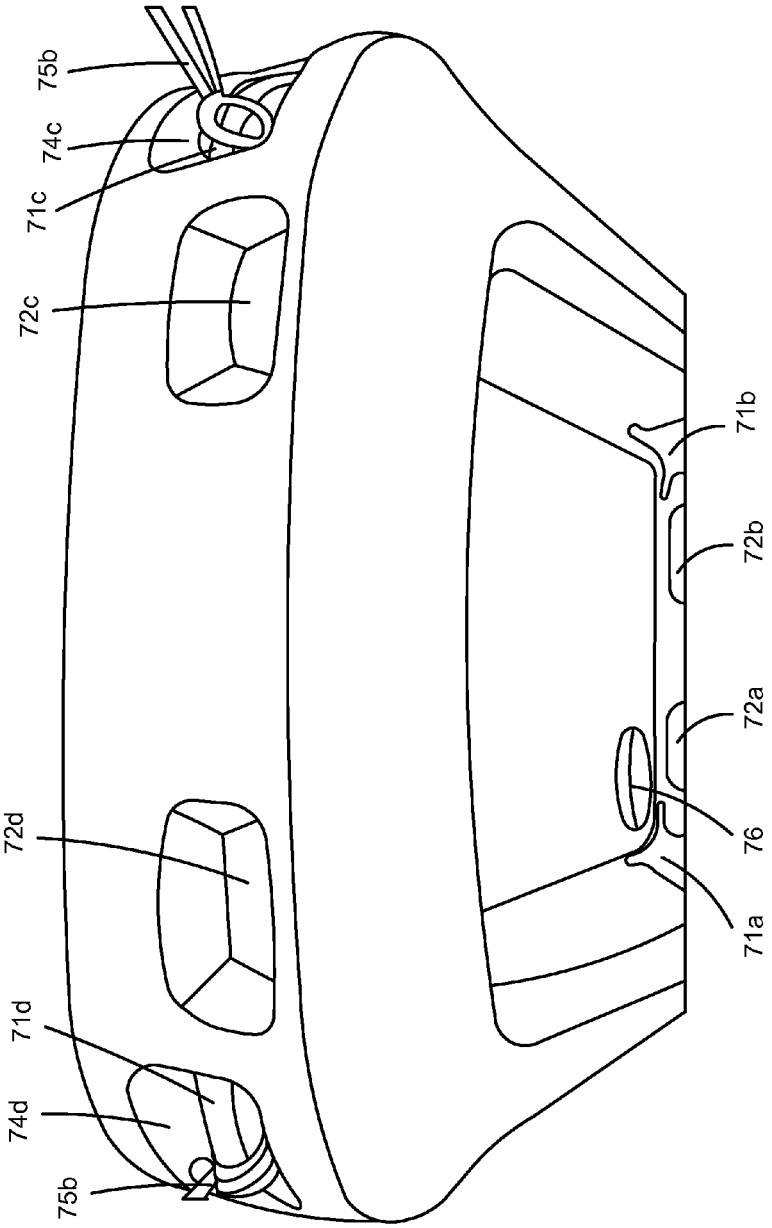

FIG. 8C

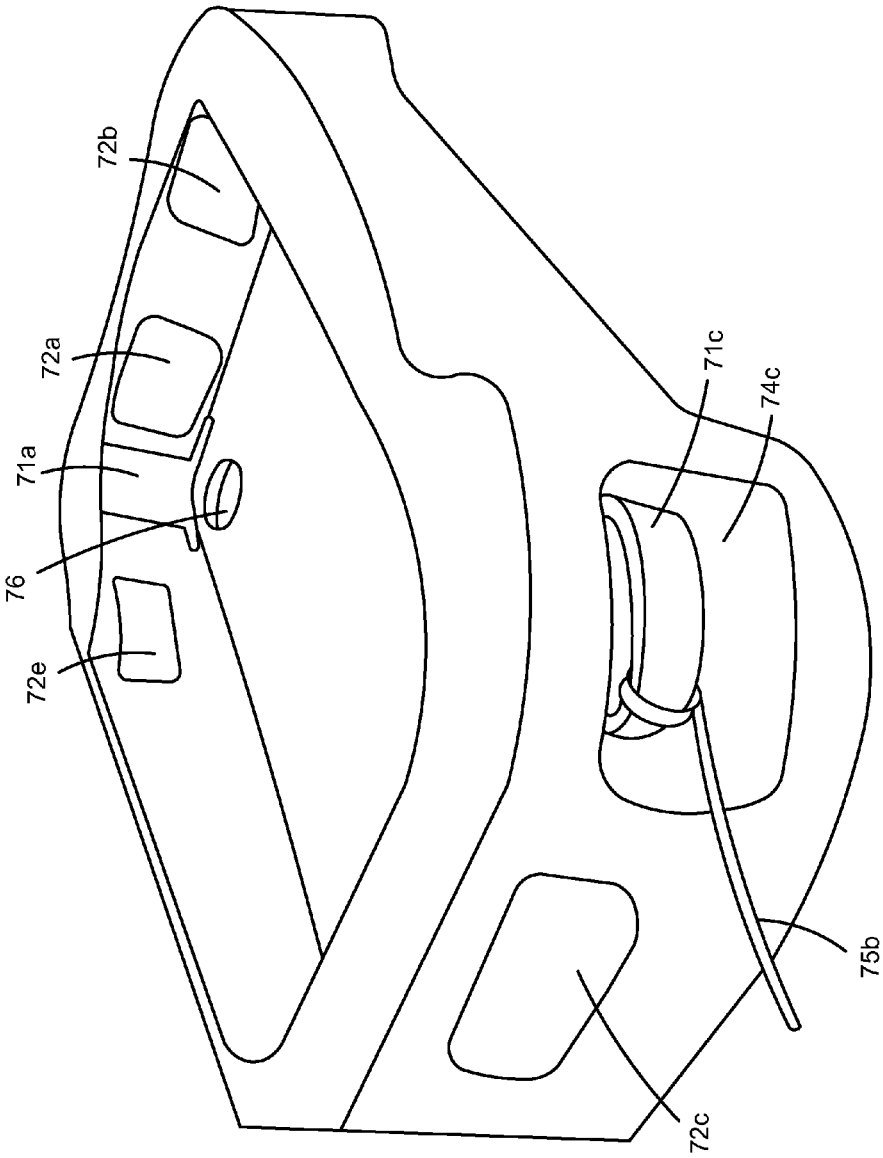

FIG. 8D

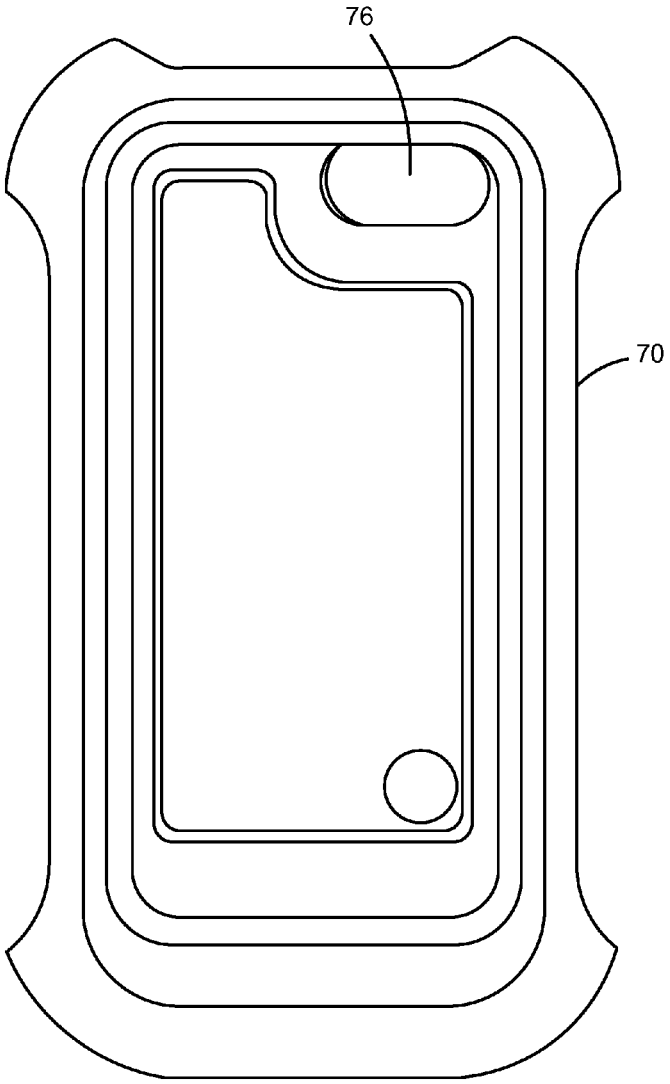

FIG. 8E

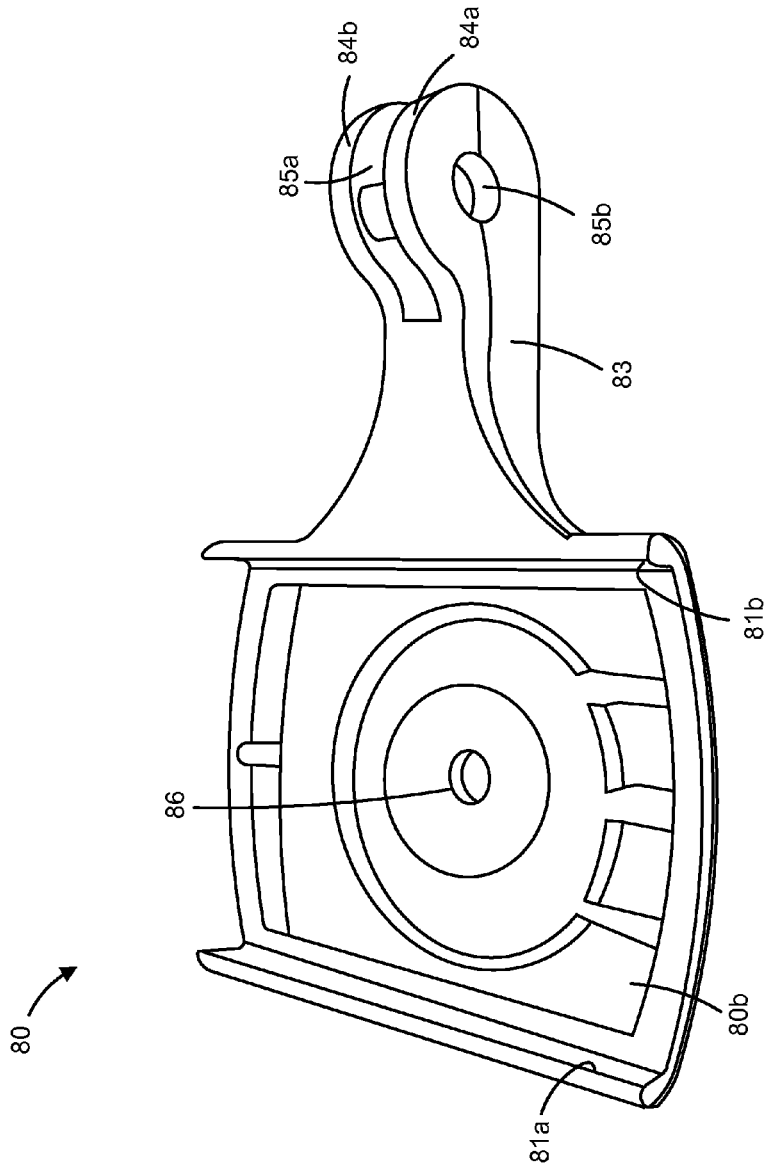

FIG. 9A

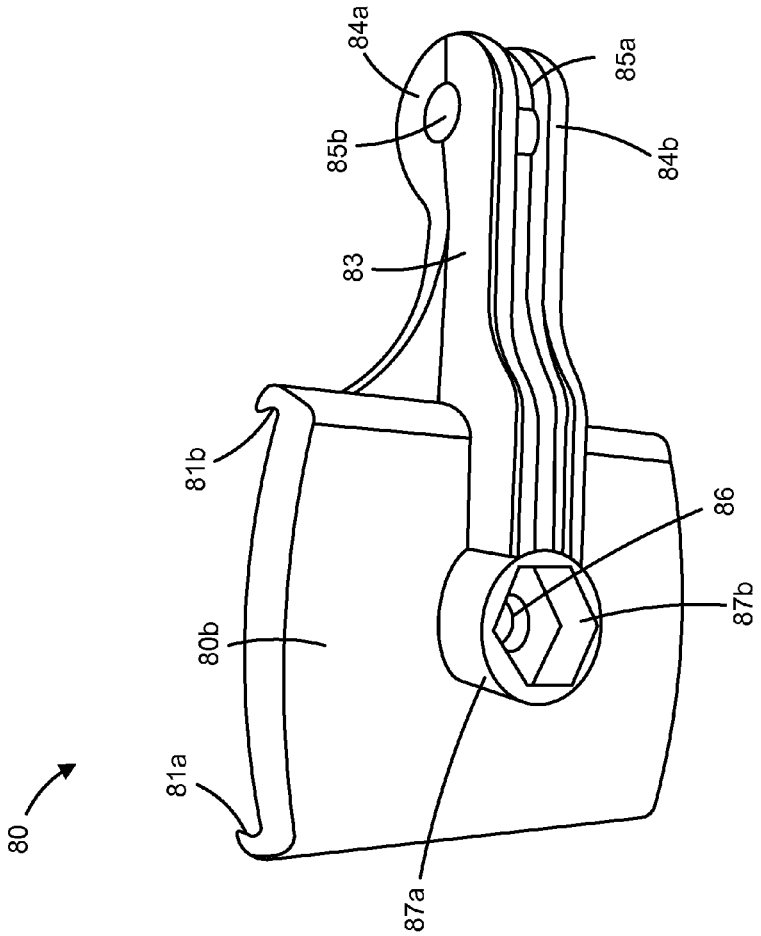

FIG. 9B

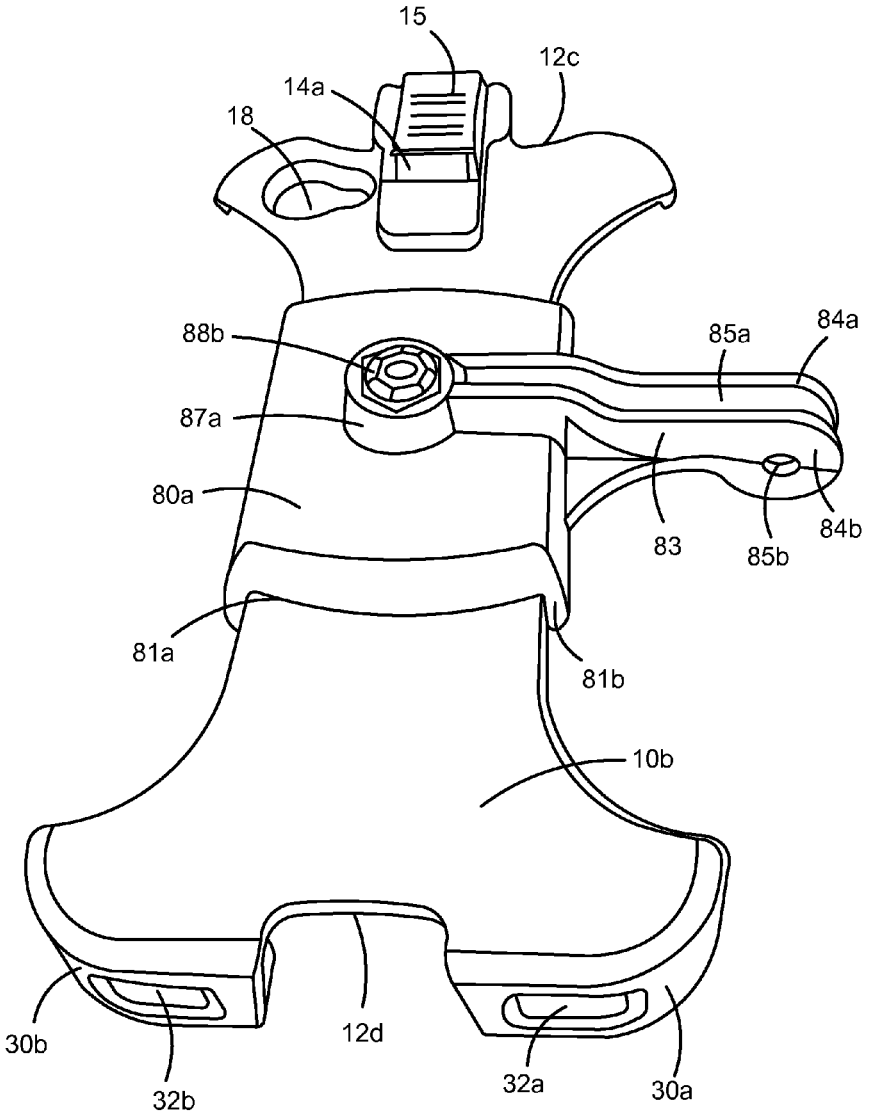
15
12c
14a
18
88b
85a
84a
87a
80a
83
85b
84b
81a
81b
10b
30b
12d
32b
32a
30a

FIG. 9C

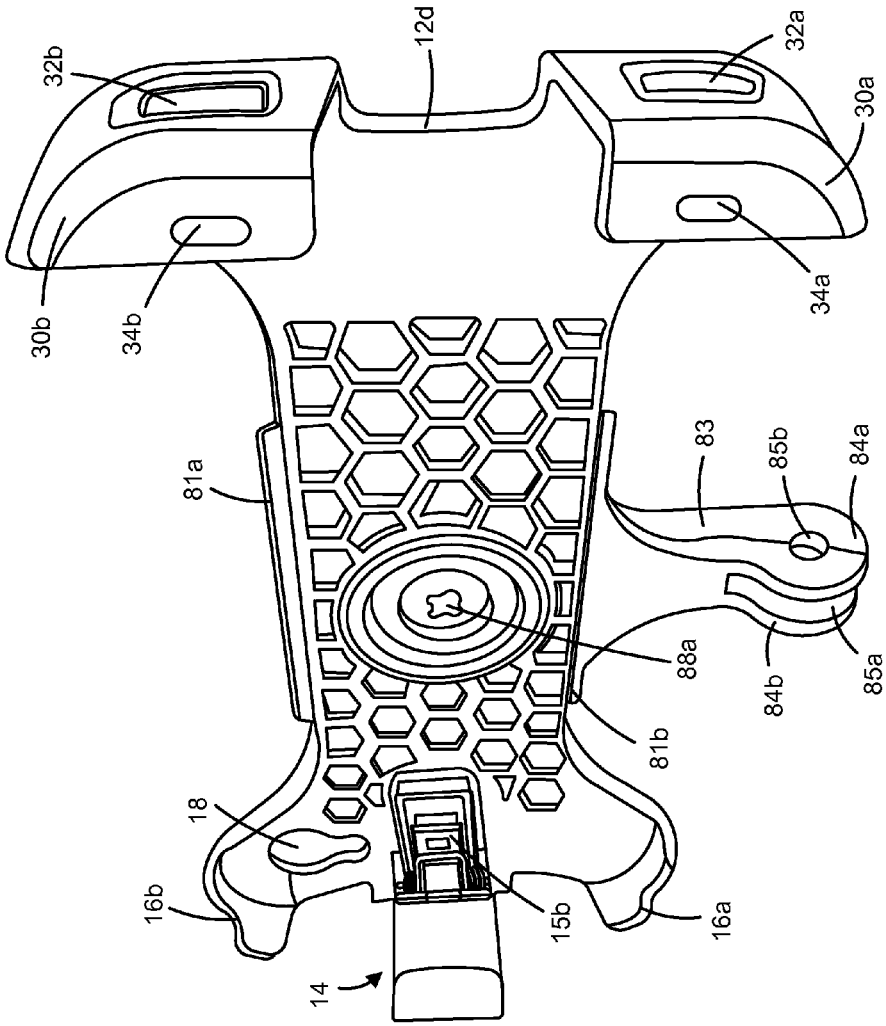
32b
12d
32a
30a
30b
34b
34a
81a
83
85b
84a
88a
84b
85a
81b
18
16b
15b
16a
14

FIG. 9D

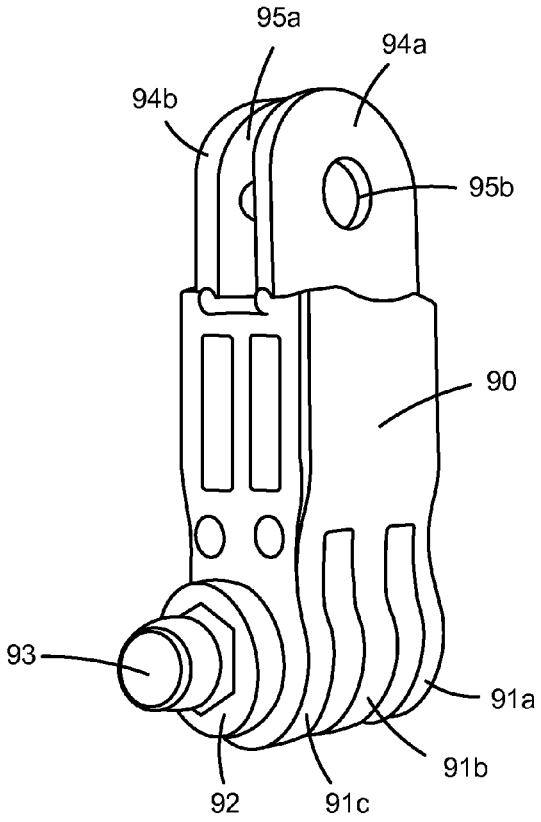

FIG. 9E

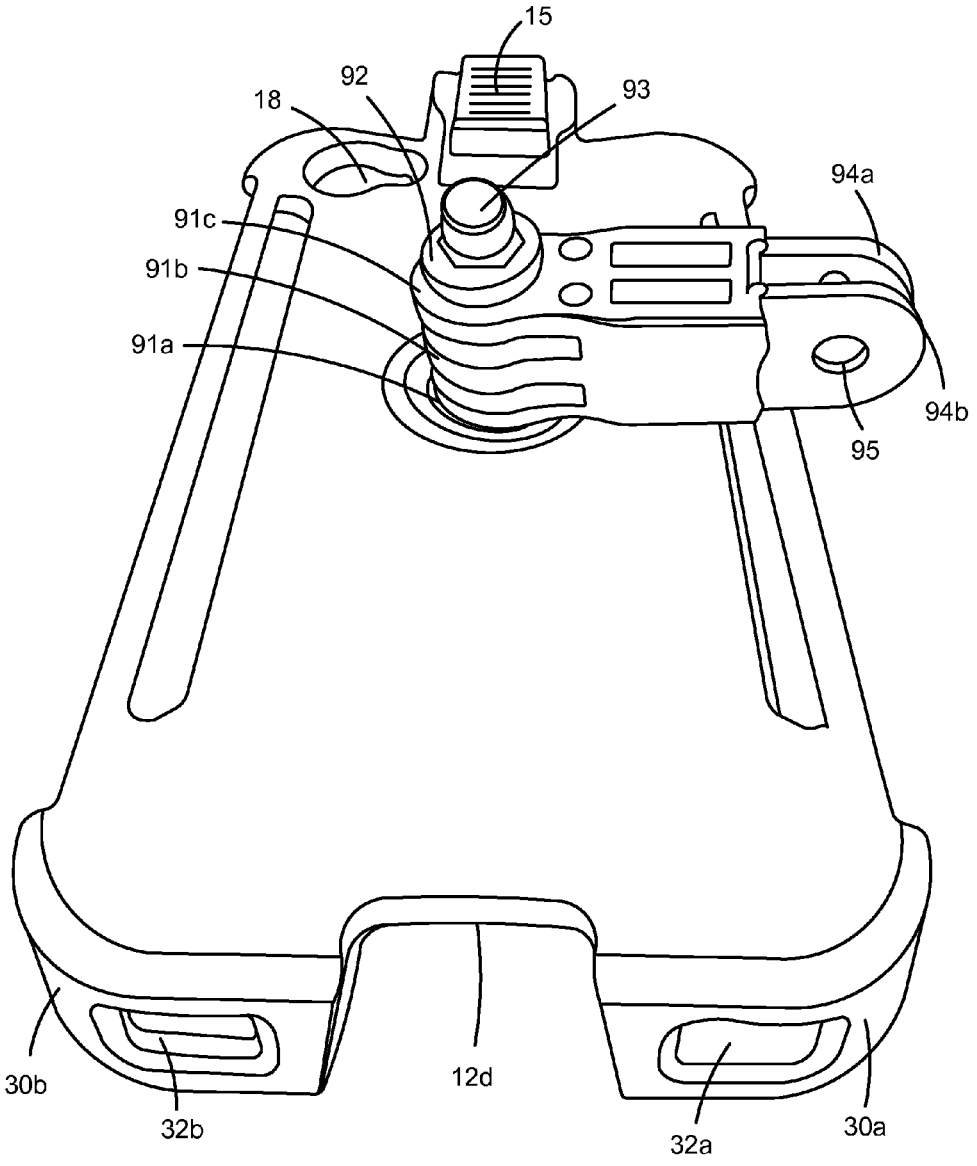

FIG. 9F

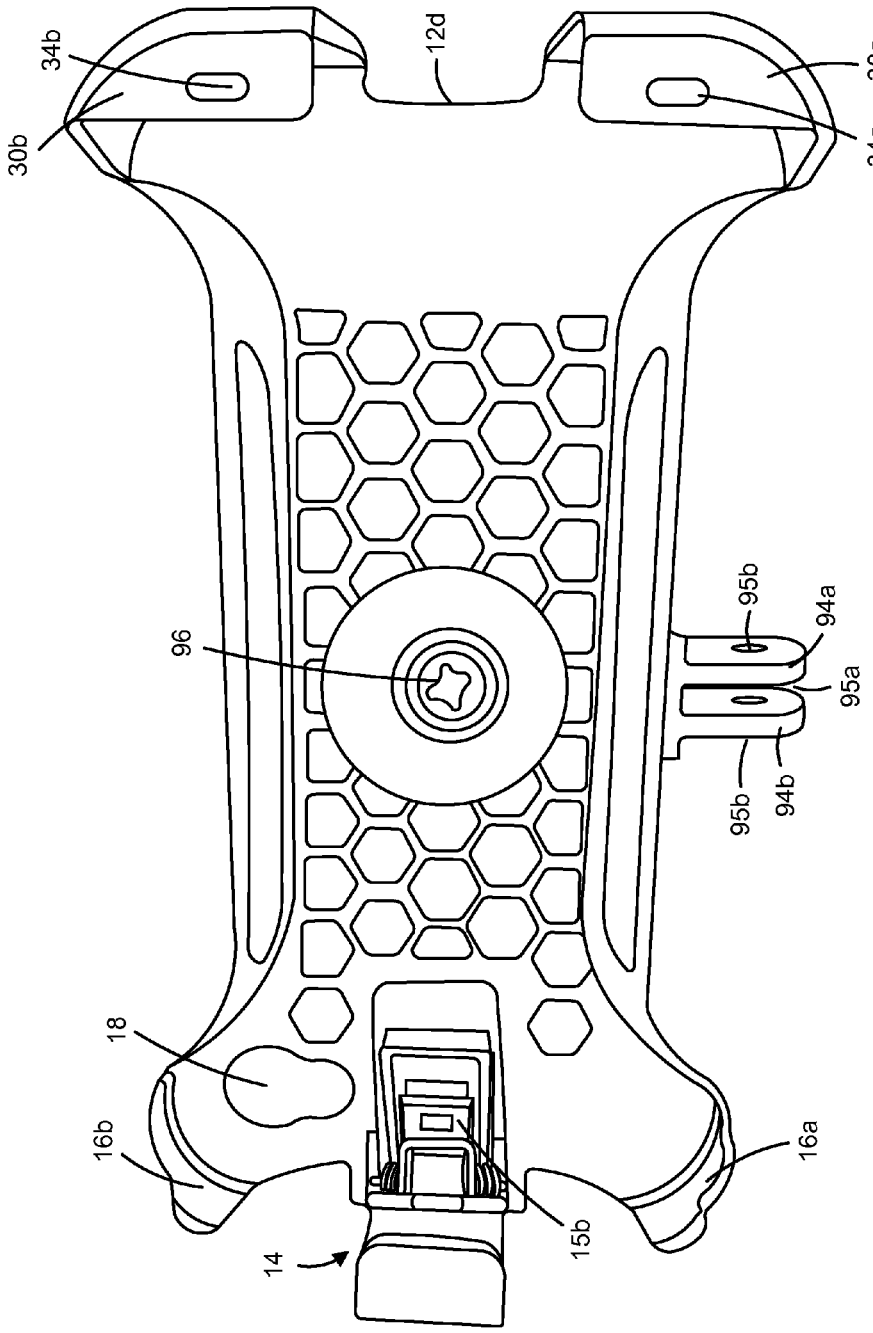

FIG. 9G

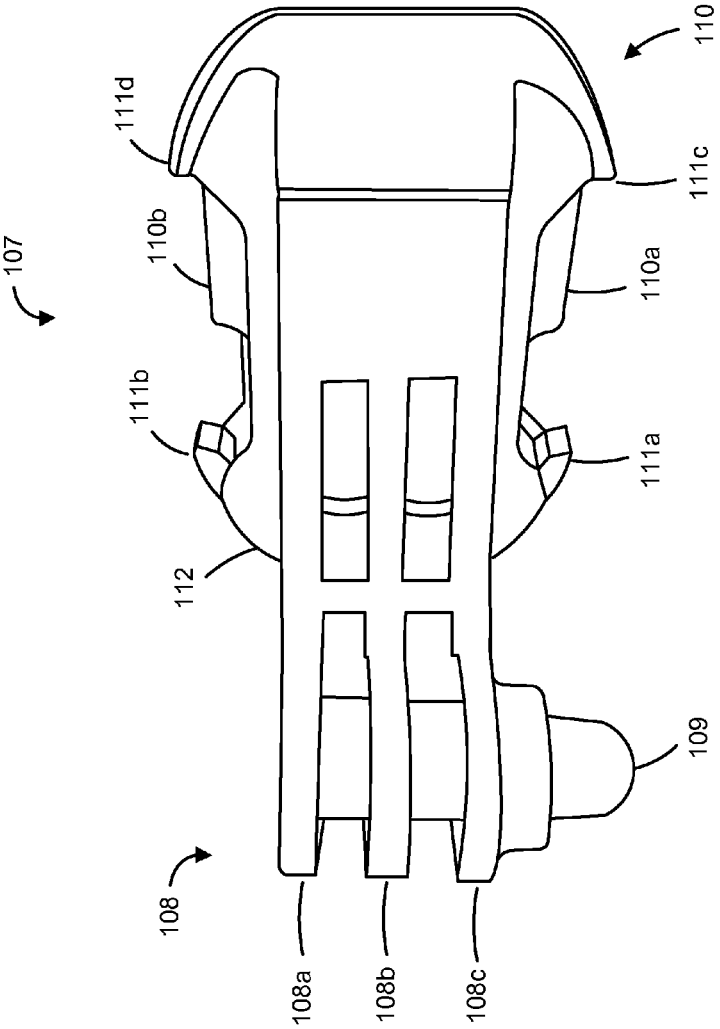
107
108
108a
108b
108c
109
110
110a
110b
111a
111b
111c
111d
112

FIG. 10A

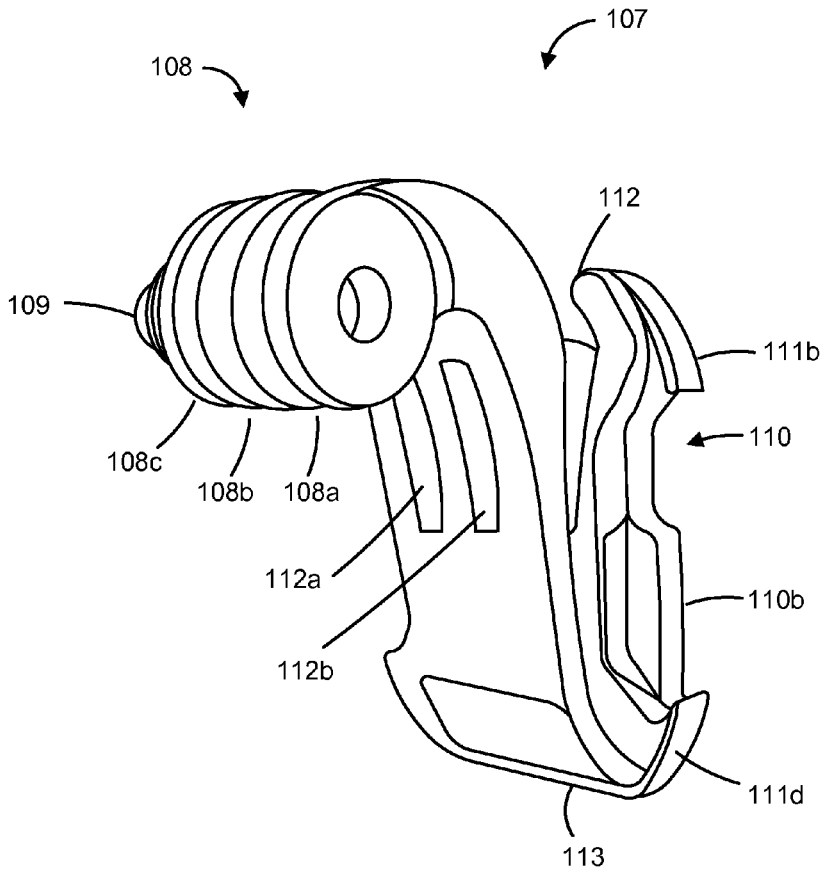
107
108
112
109
111b
110
108c
108b
108a
112a
110b
112b
111d
113

FIG. 10B

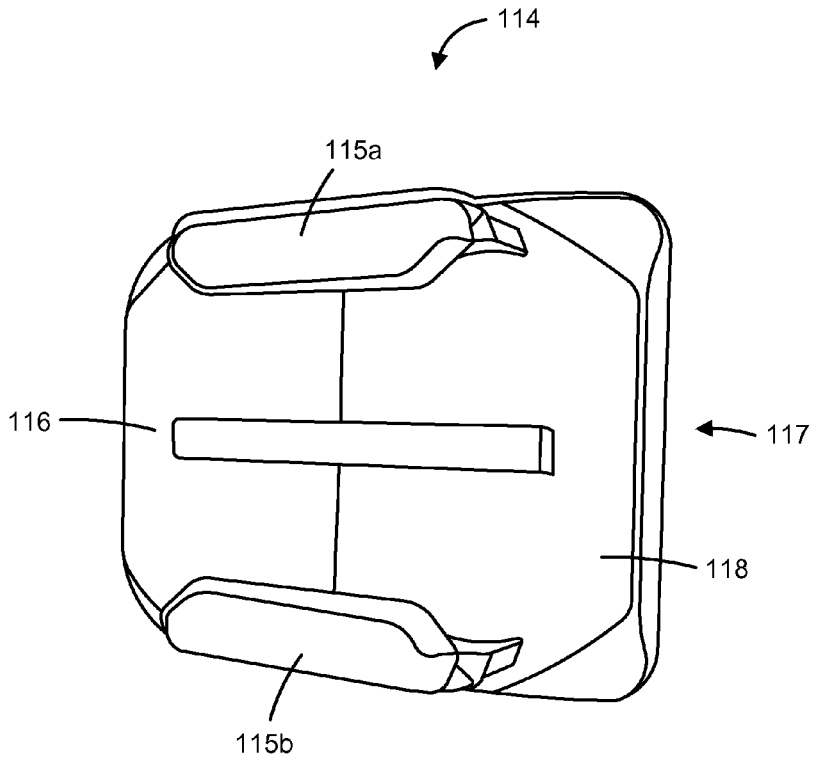

FIG. 10C

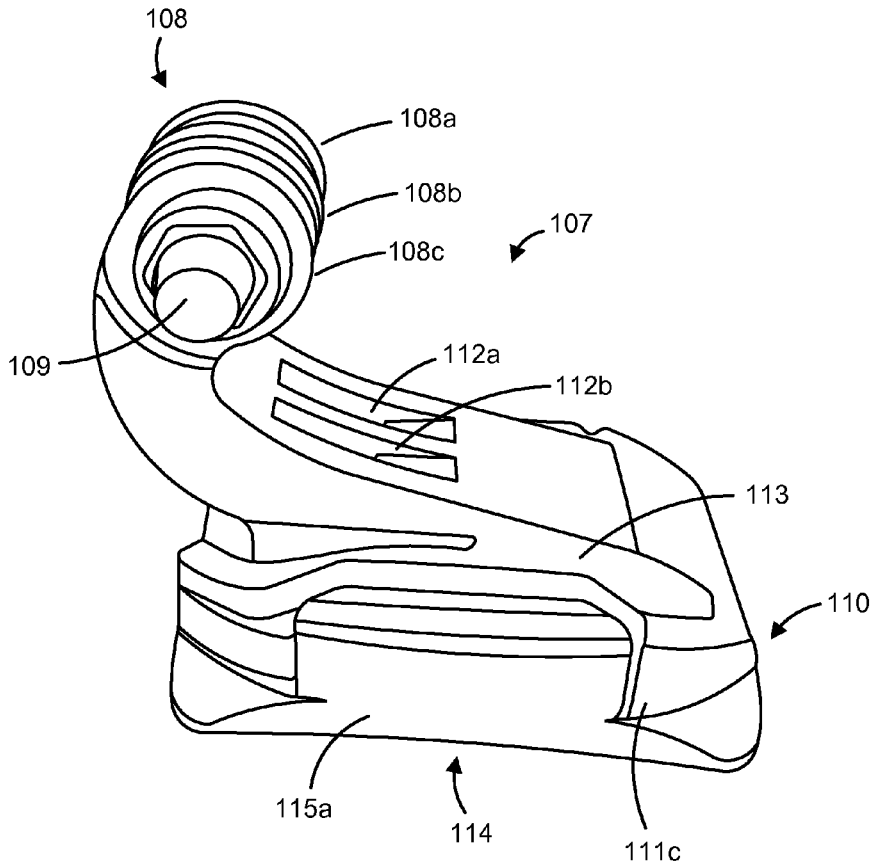

FIG. 10D

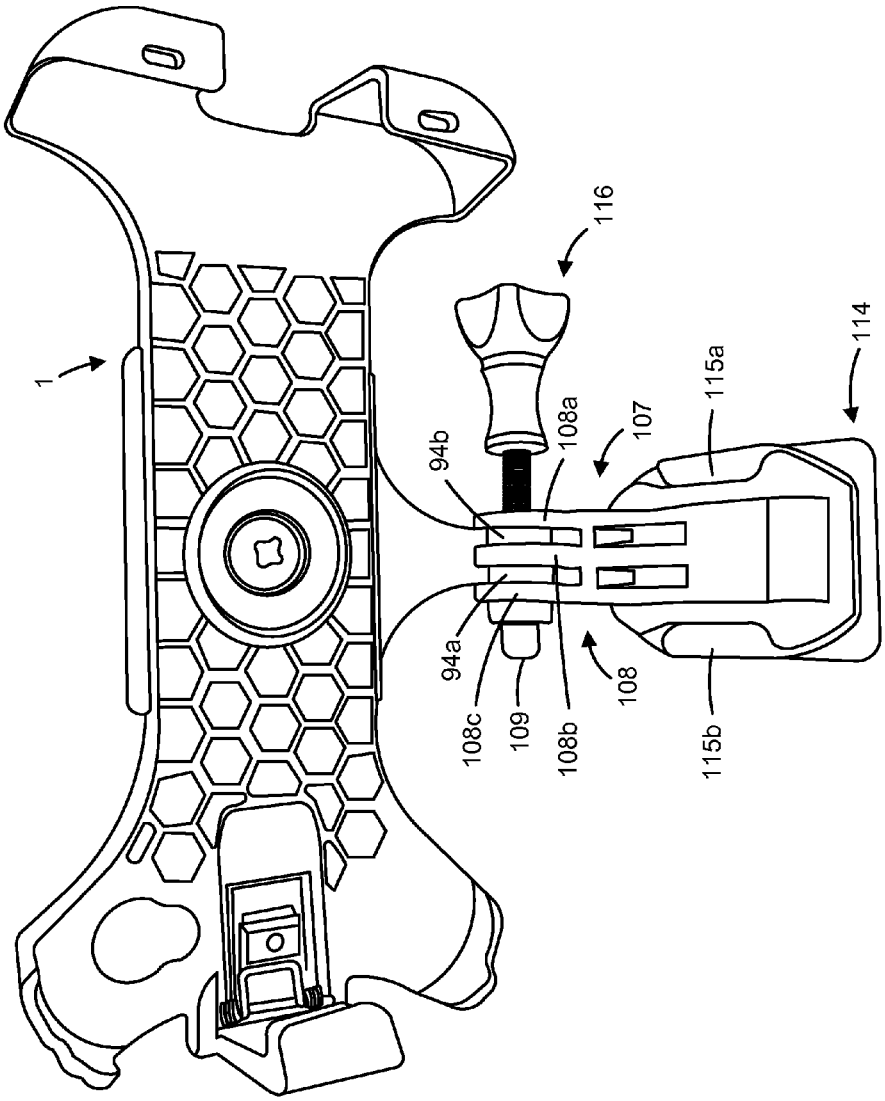

FIG. 10E

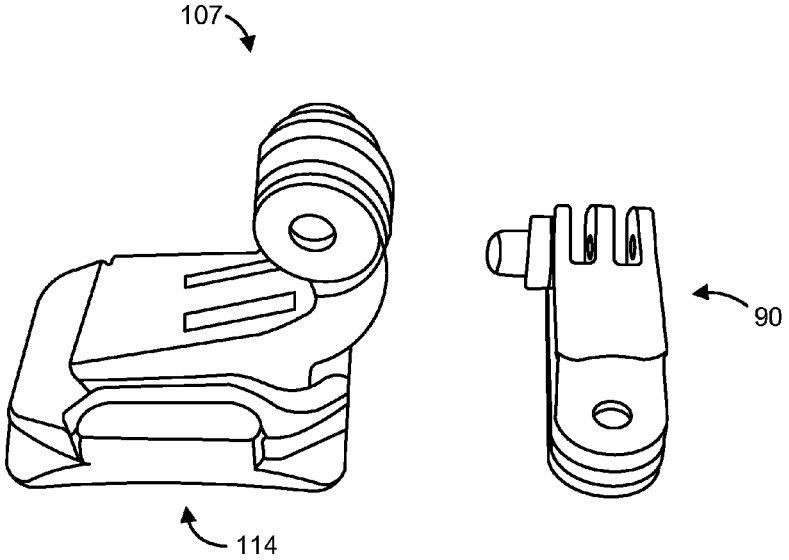

FIG. 10F

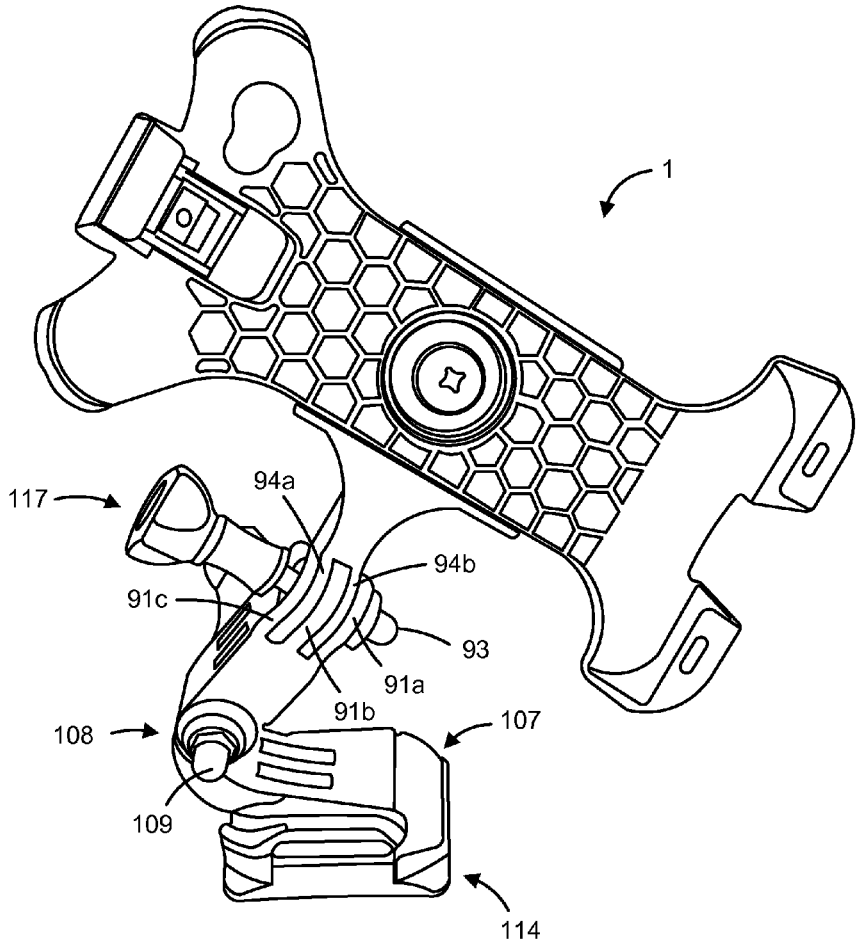

FIG. 10G

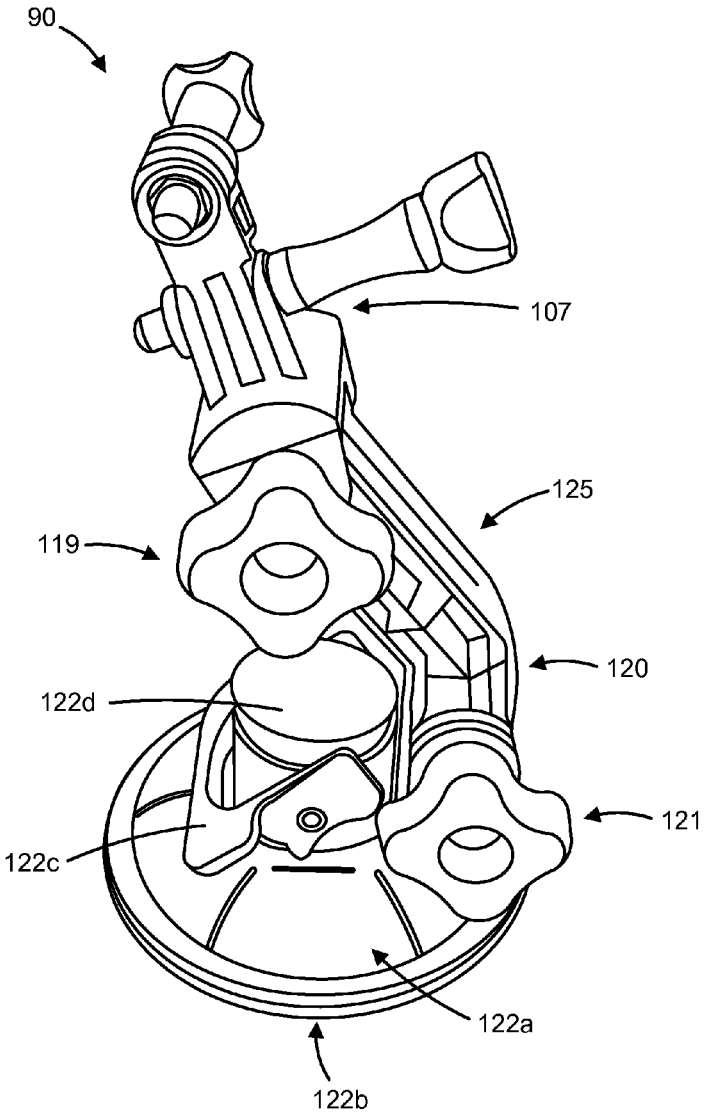

FIG. 11A

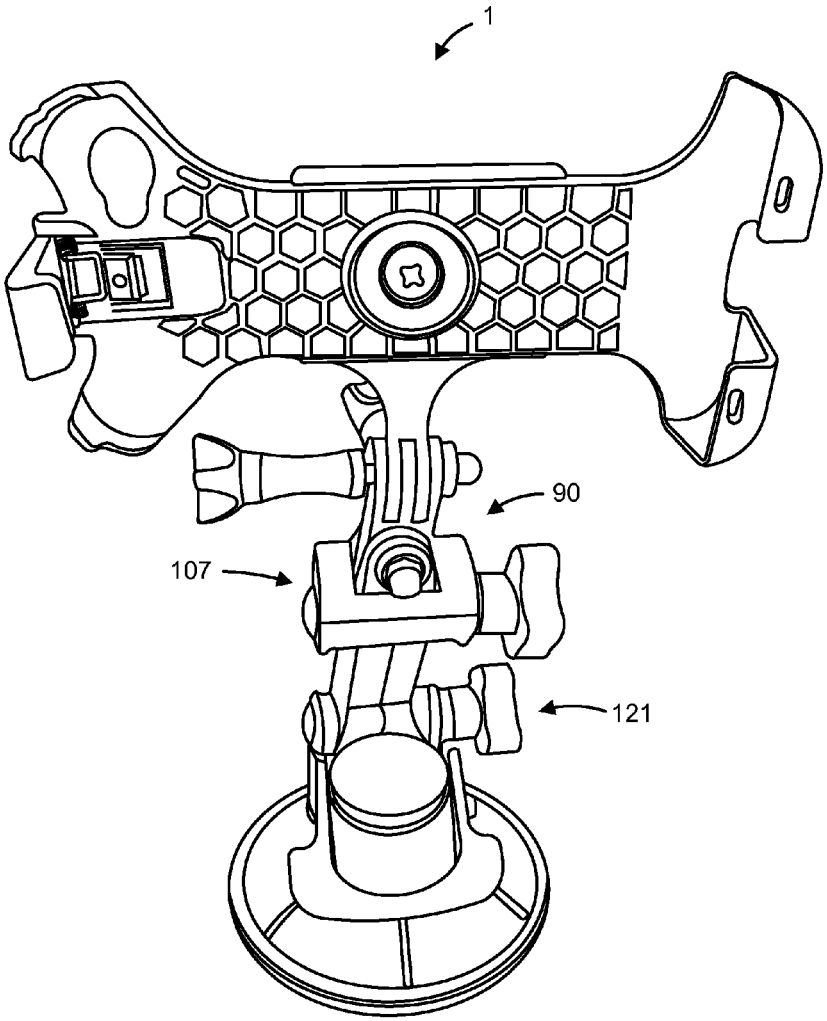

FIG. 11B

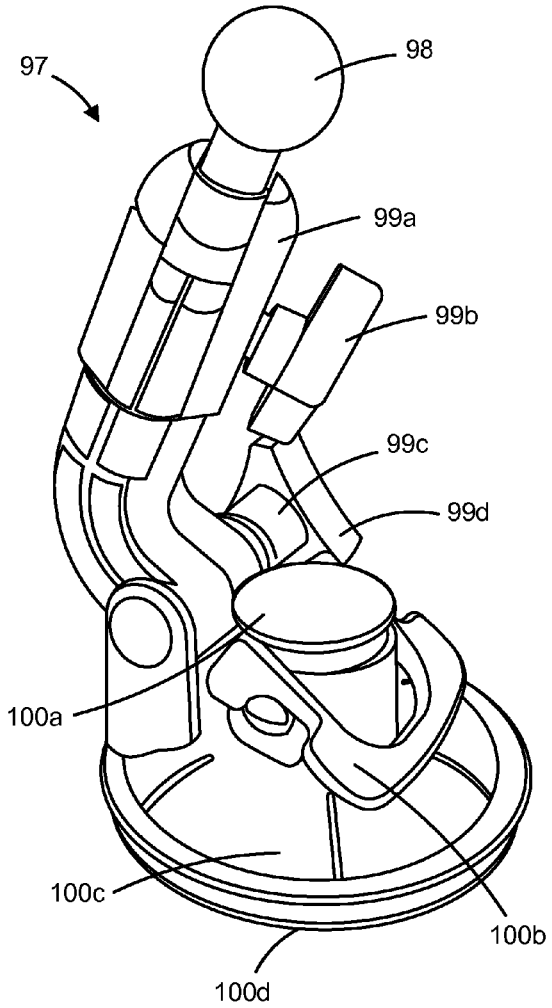

FIG. 11C

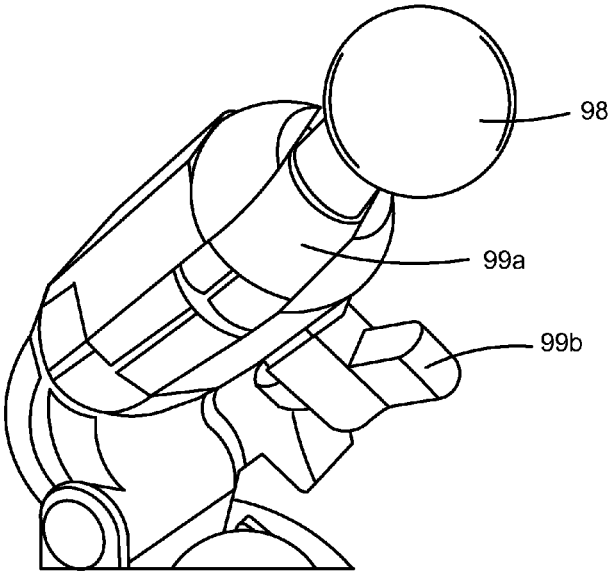

FIG. 11D

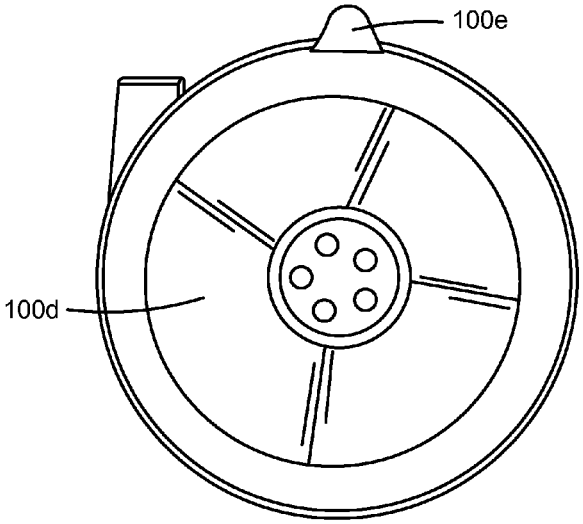

FIG. 11E

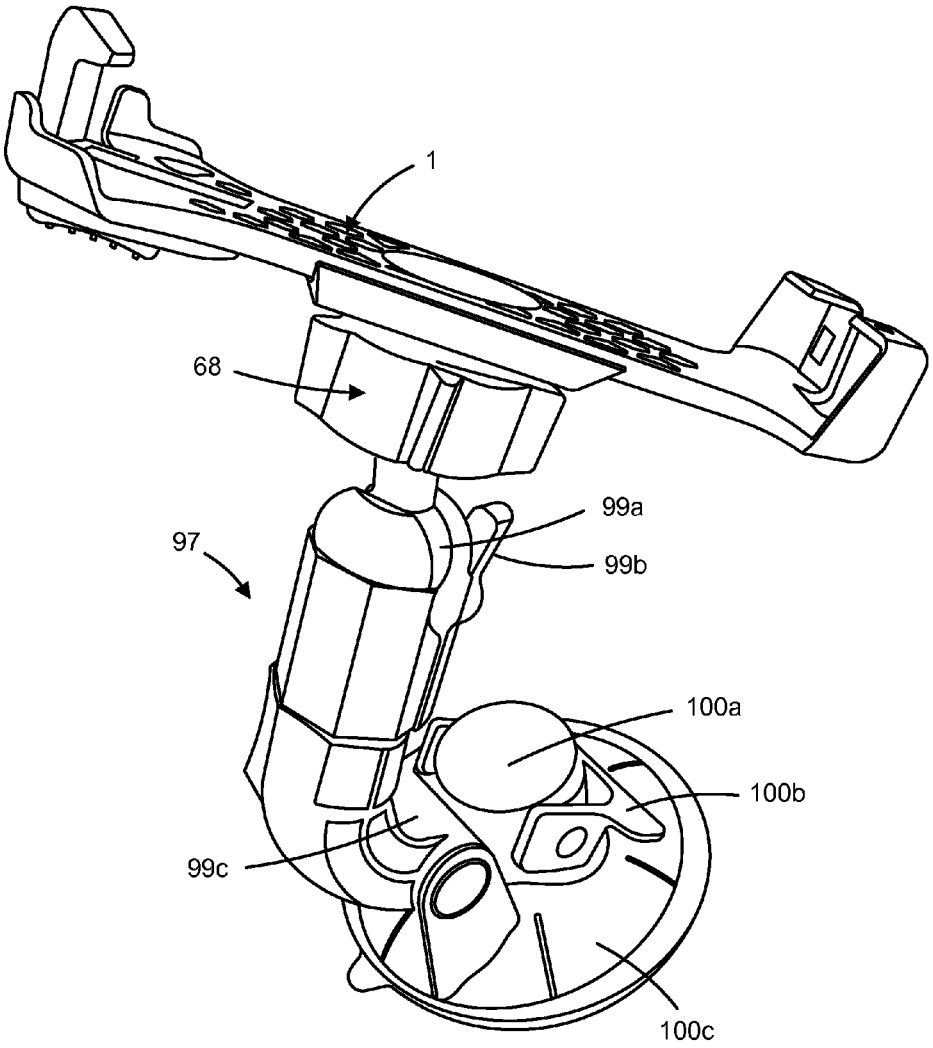

FIG. 11F

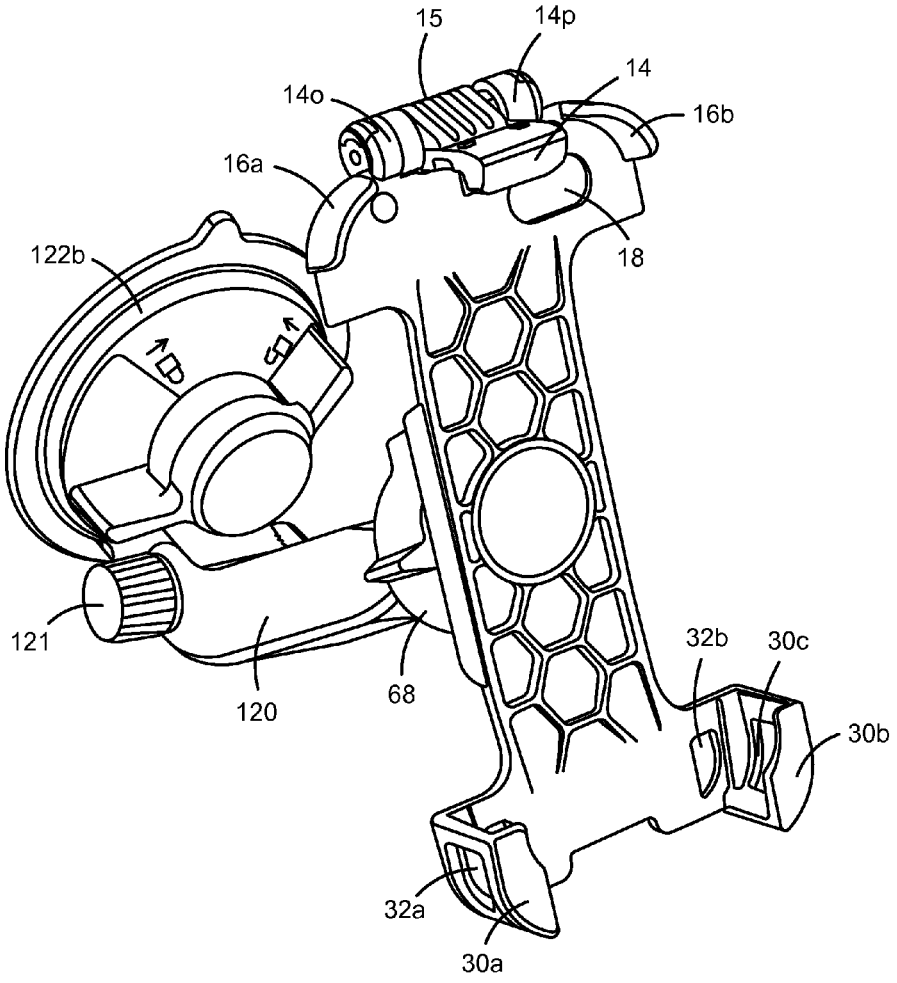

FIG. 11G

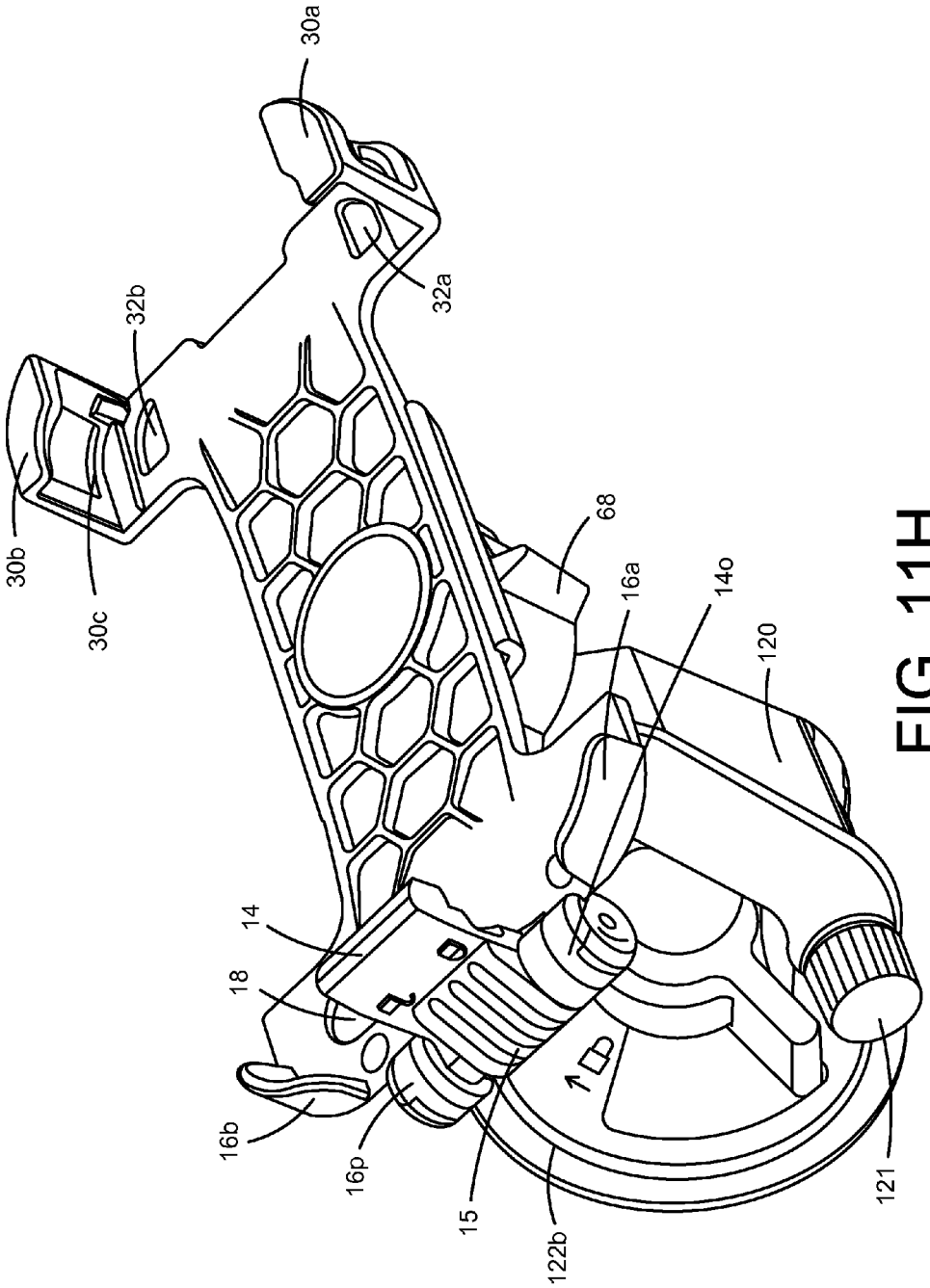

FIG. 11H

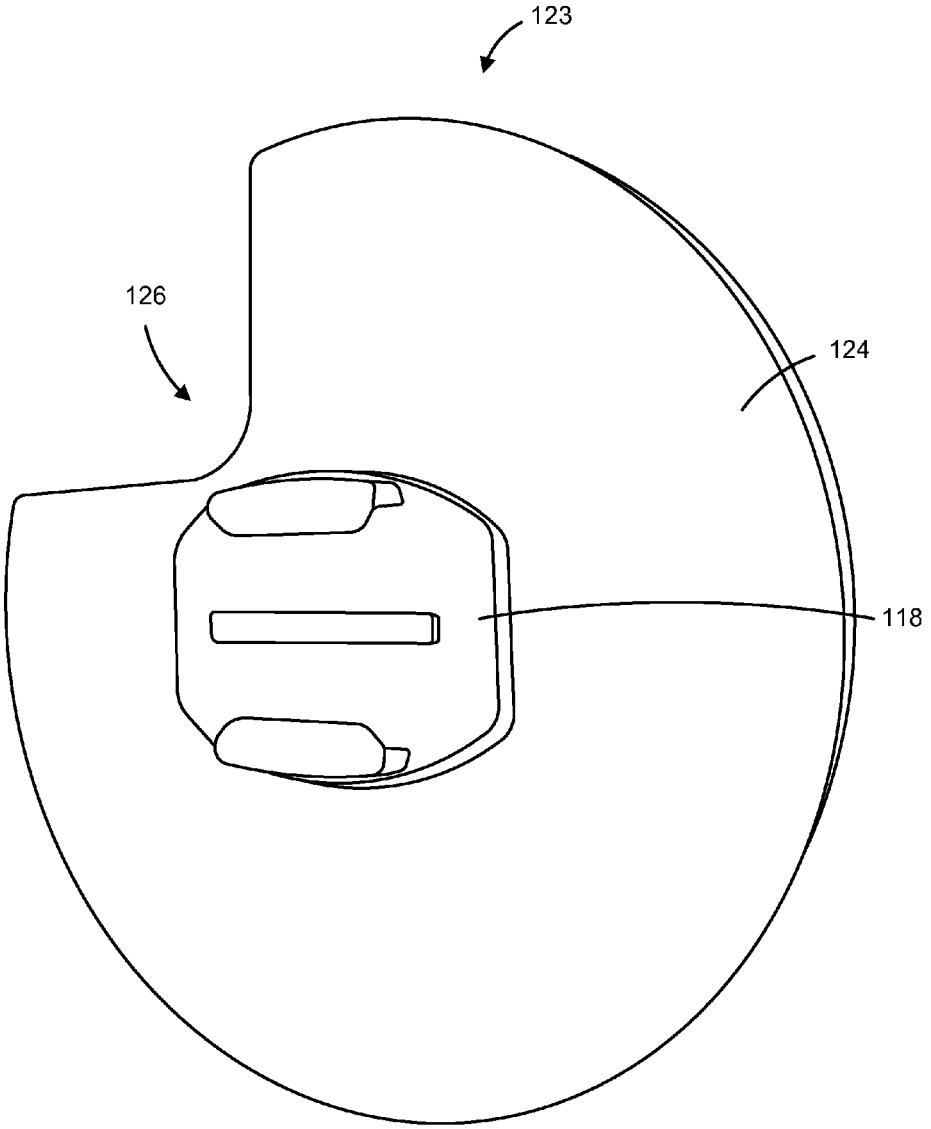

FIG. 12A

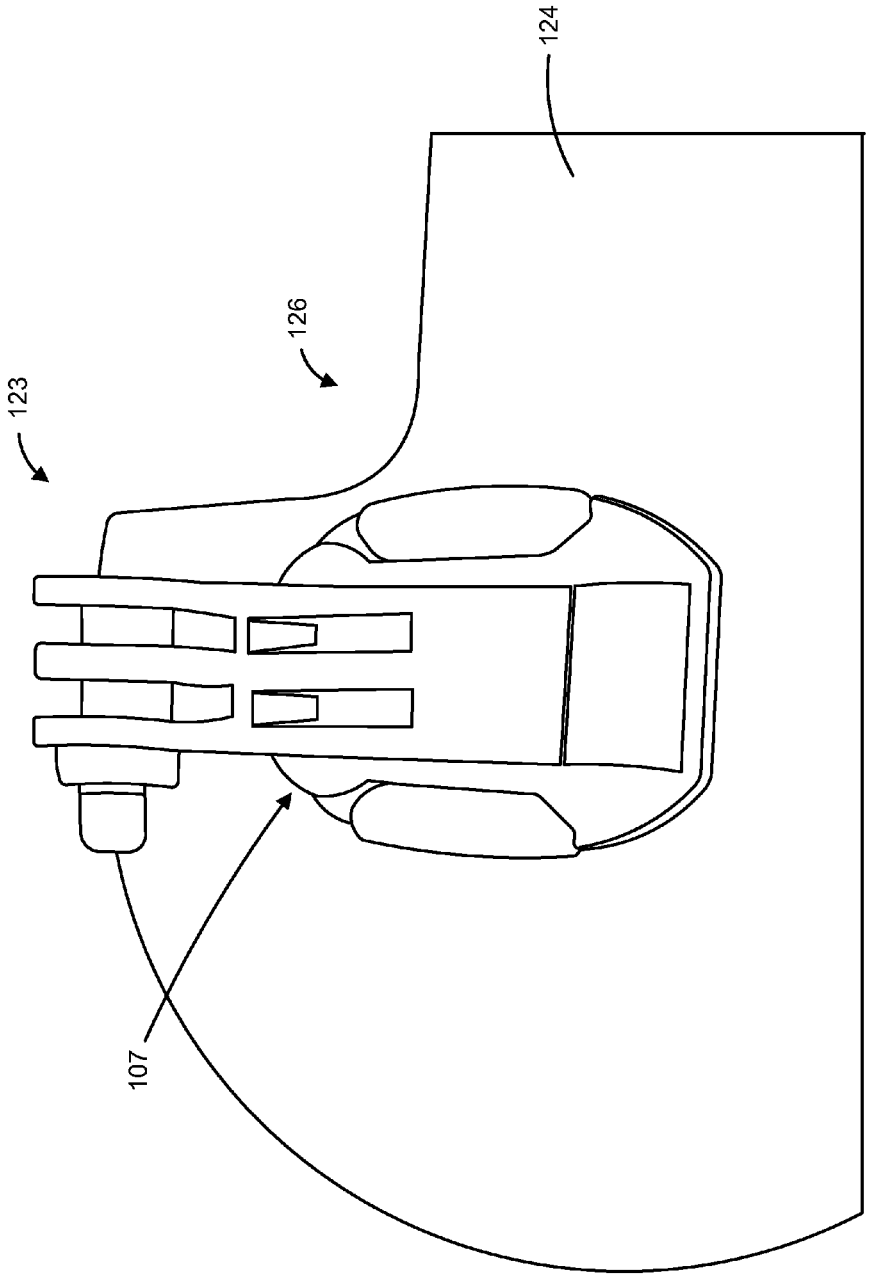

FIG. 12B

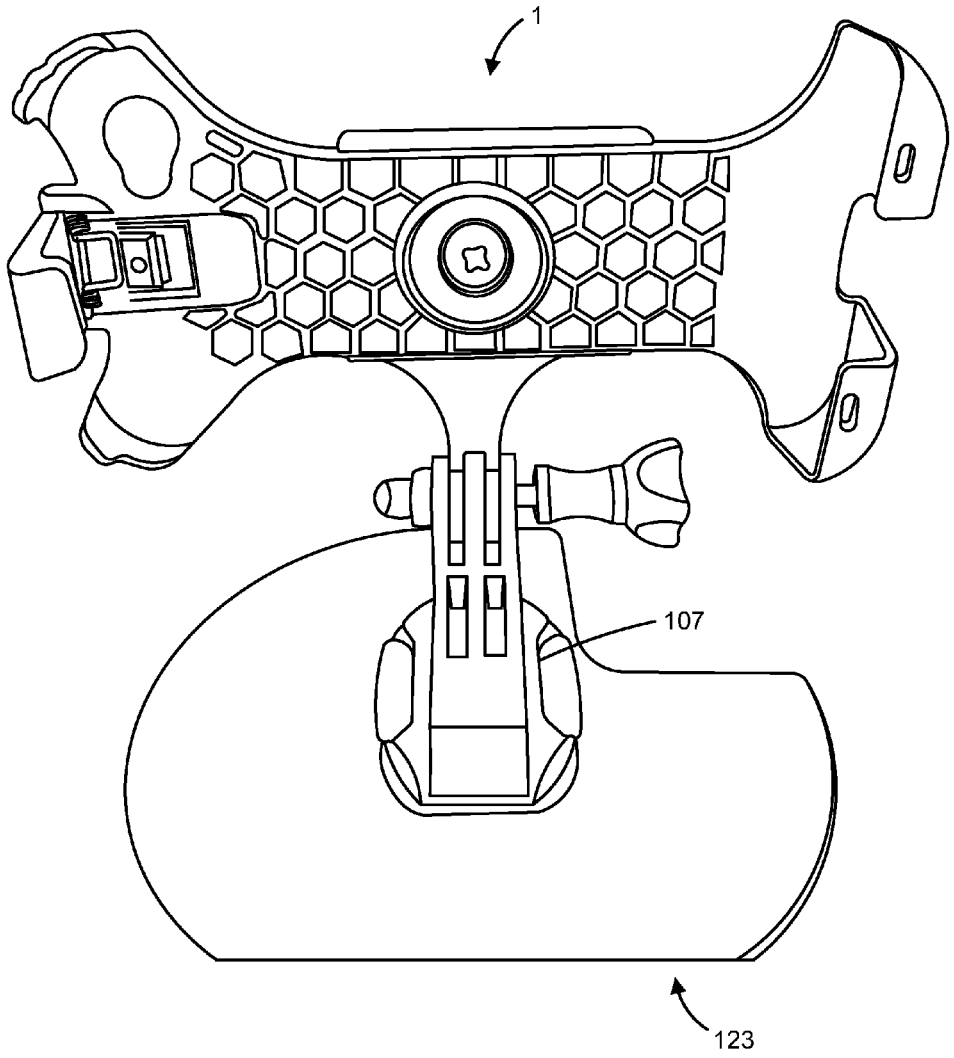

FIG. 12C

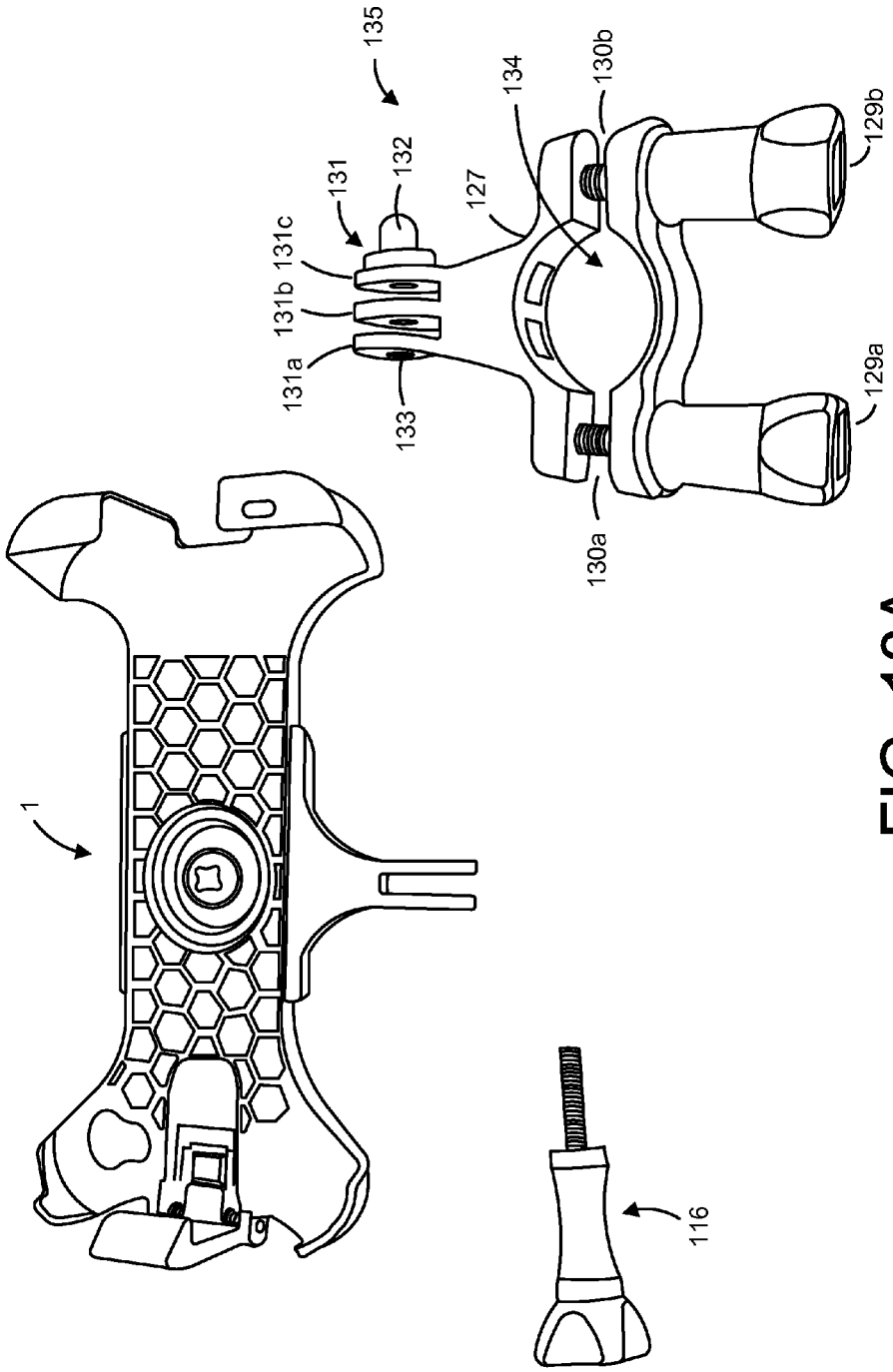
135
132
131
131c
131b
131a
133
127
134
130b
129b
129a
130a
1
116

FIG. 13A

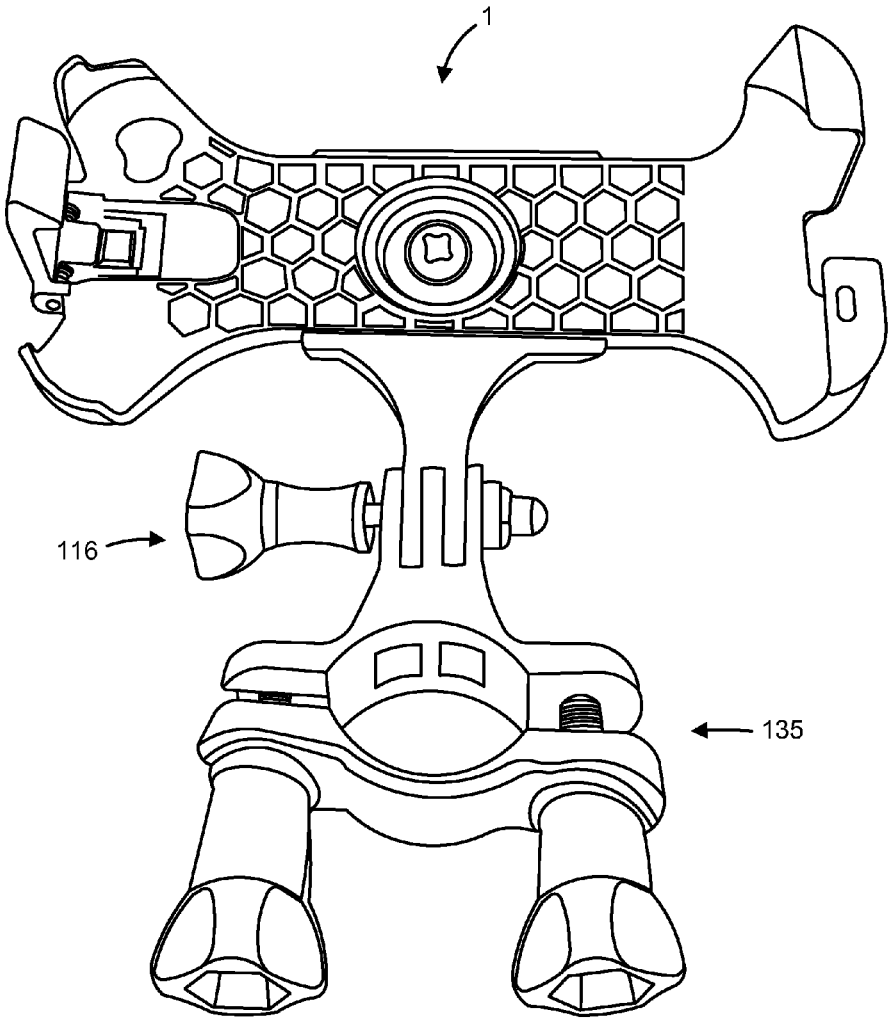

FIG. 13B

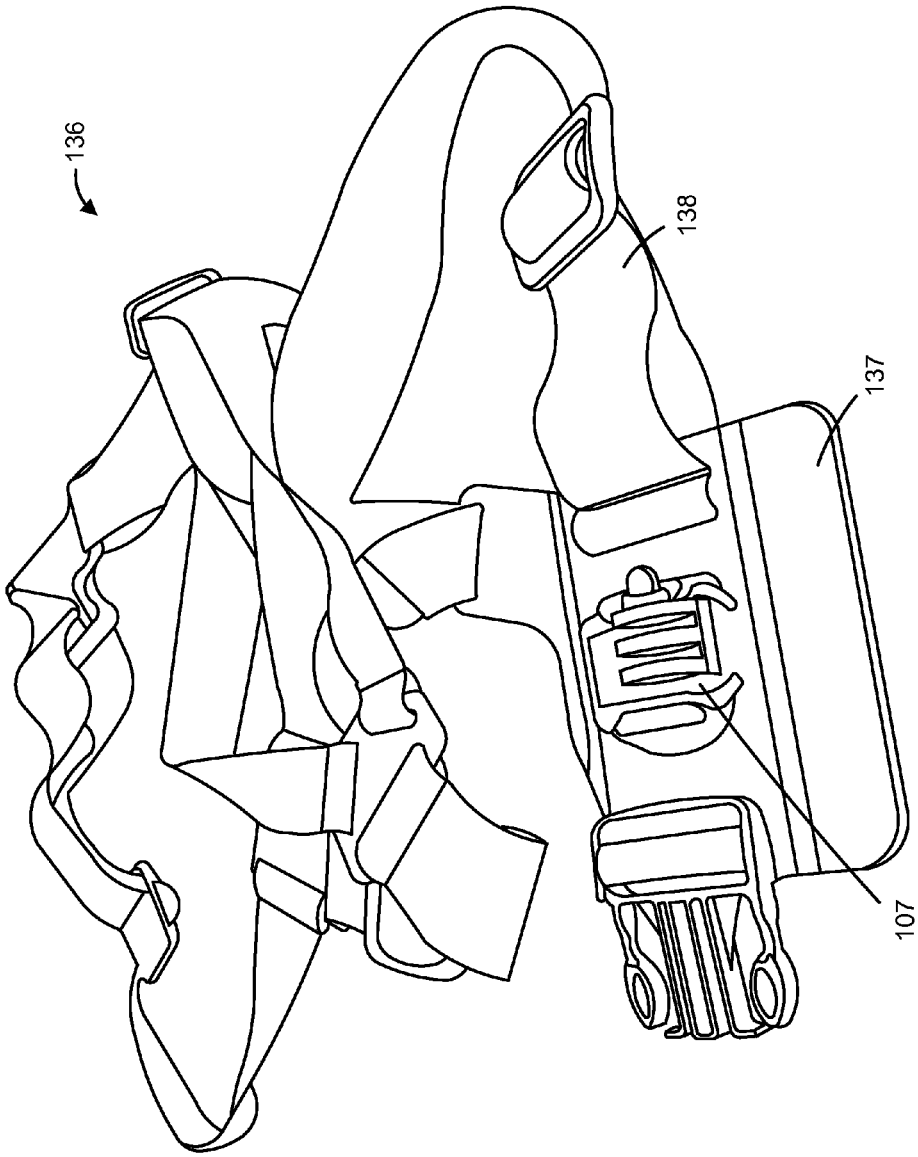

FIG. 14A

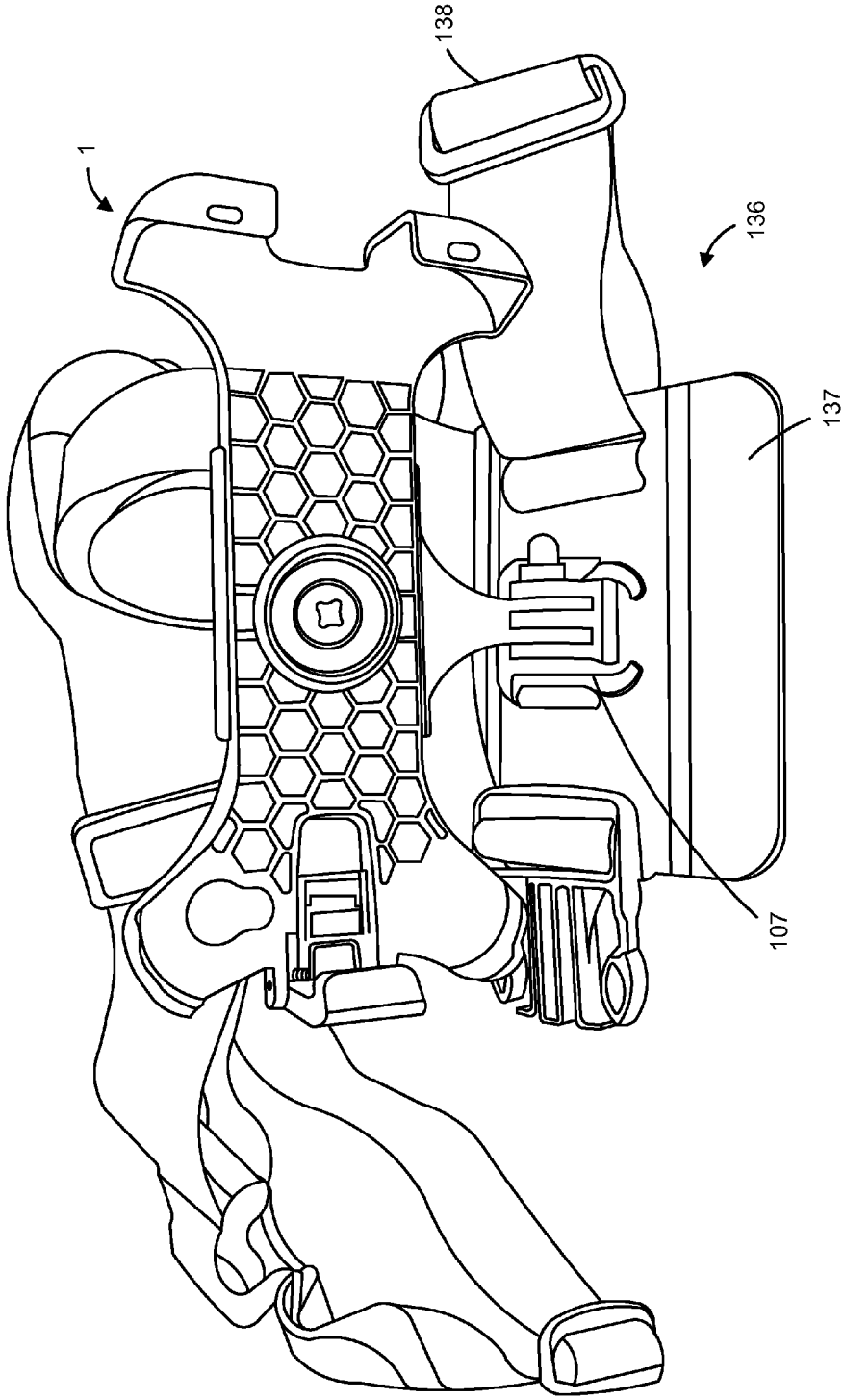

FIG. 14B

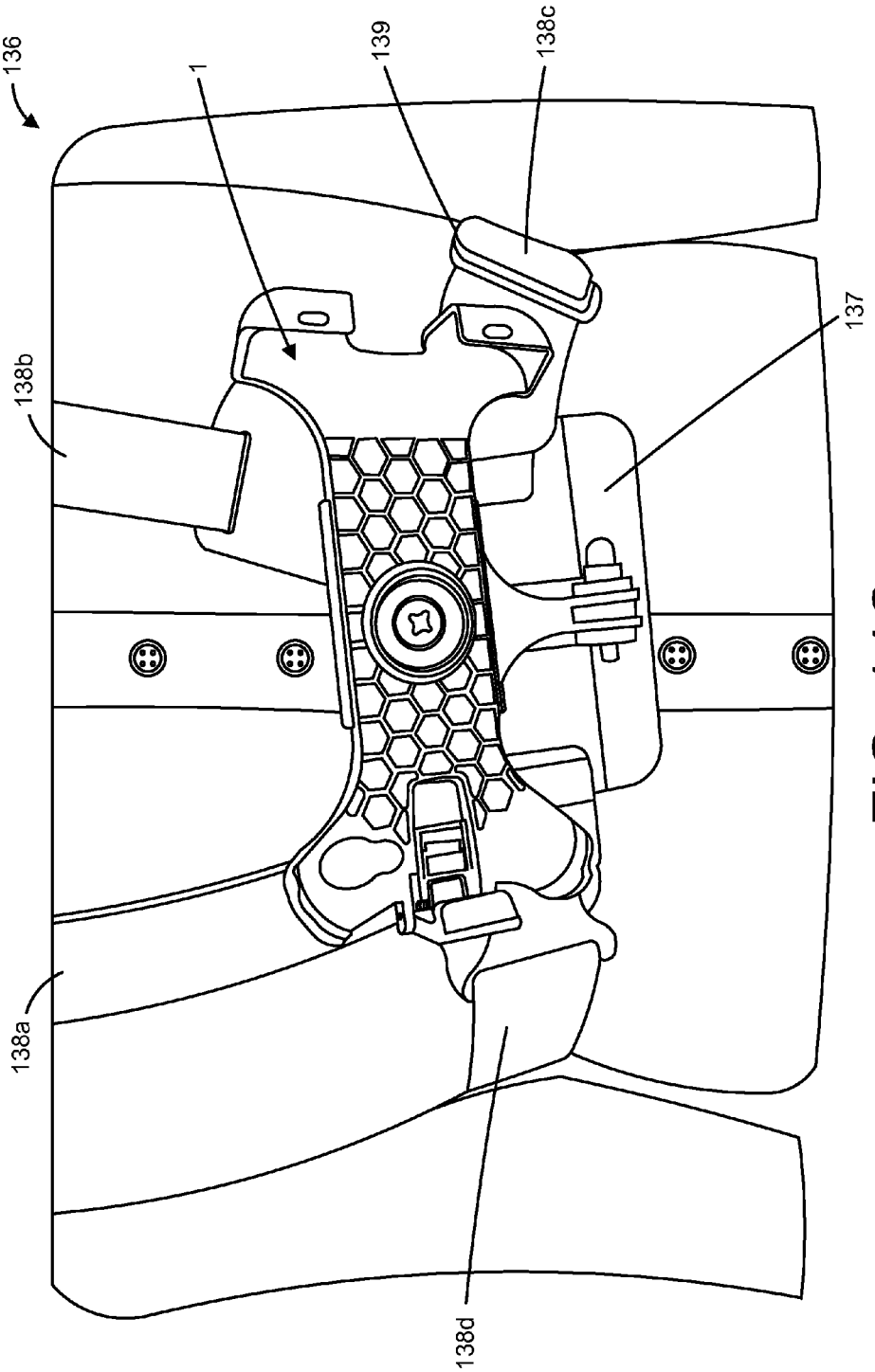

FIG. 14C

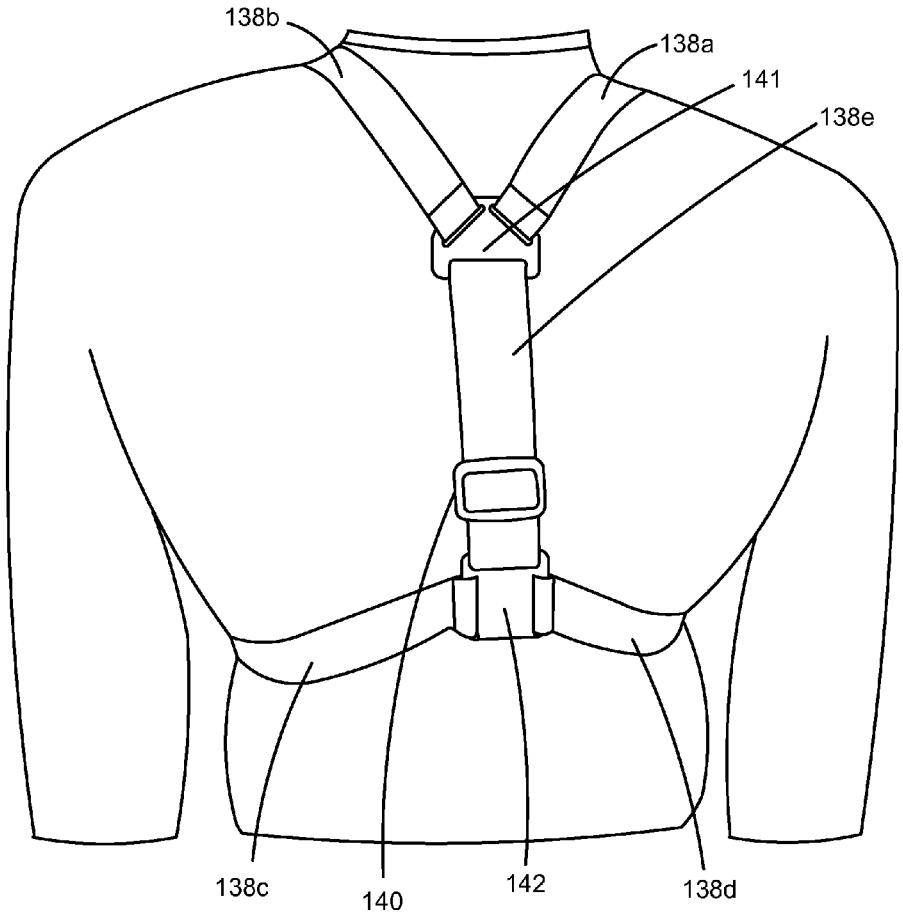

FIG. 14D

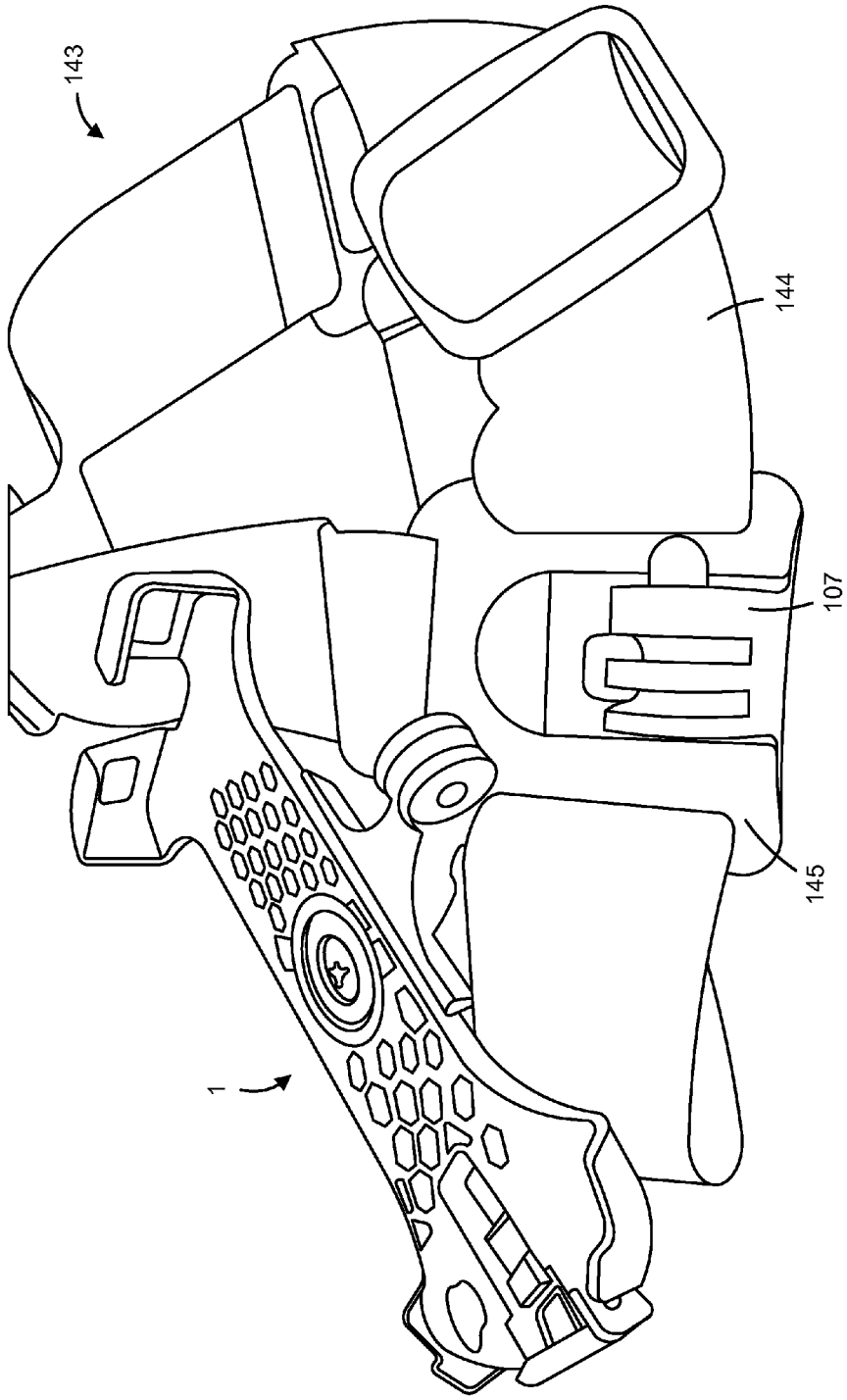

FIG. 15A

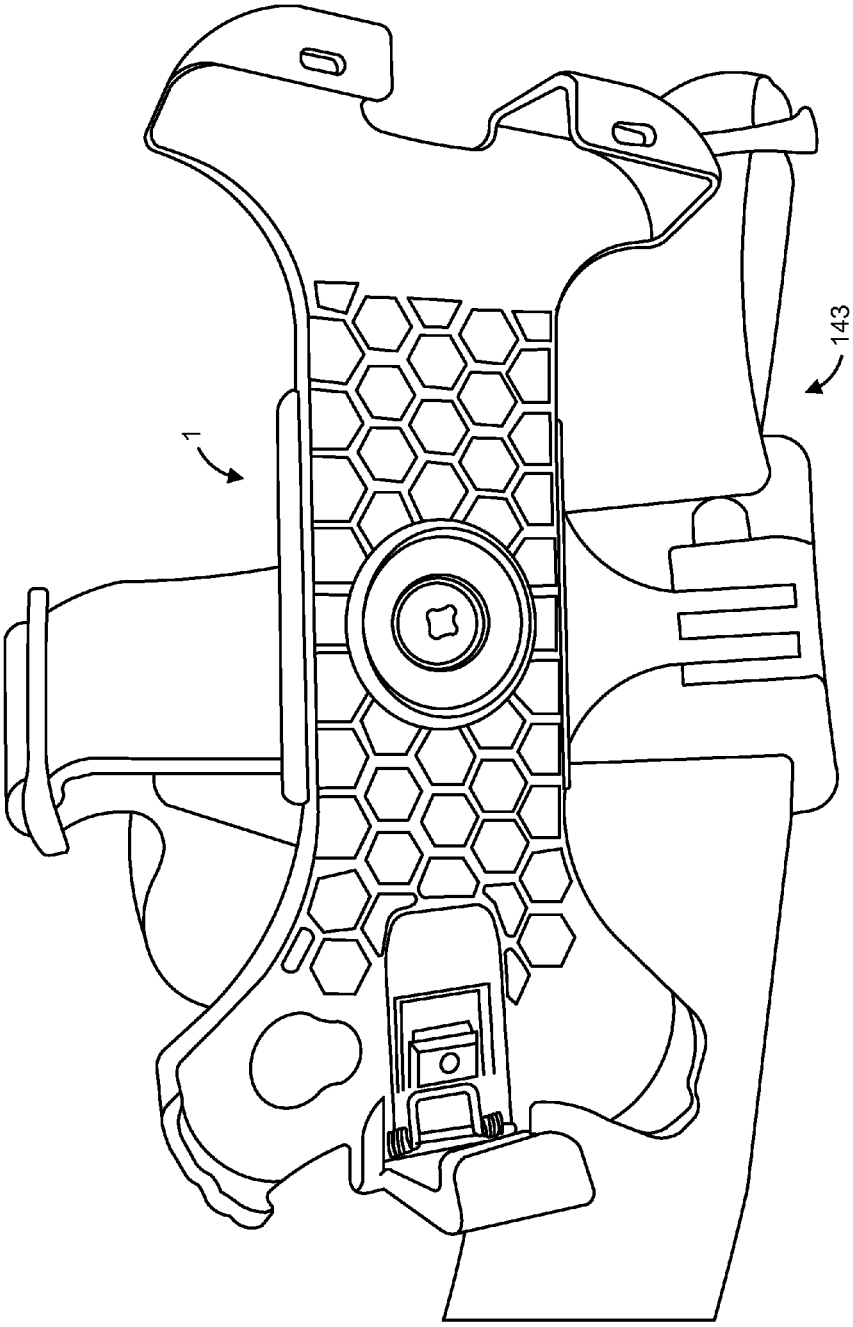

FIG. 15B

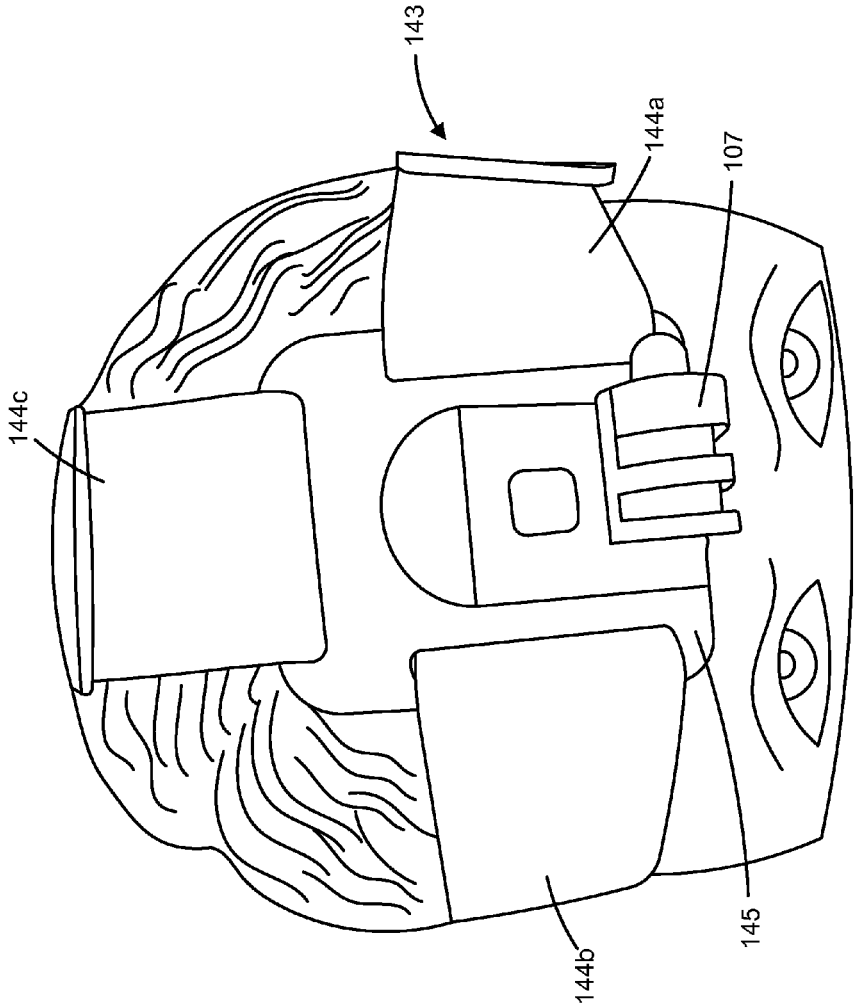

FIG. 15C

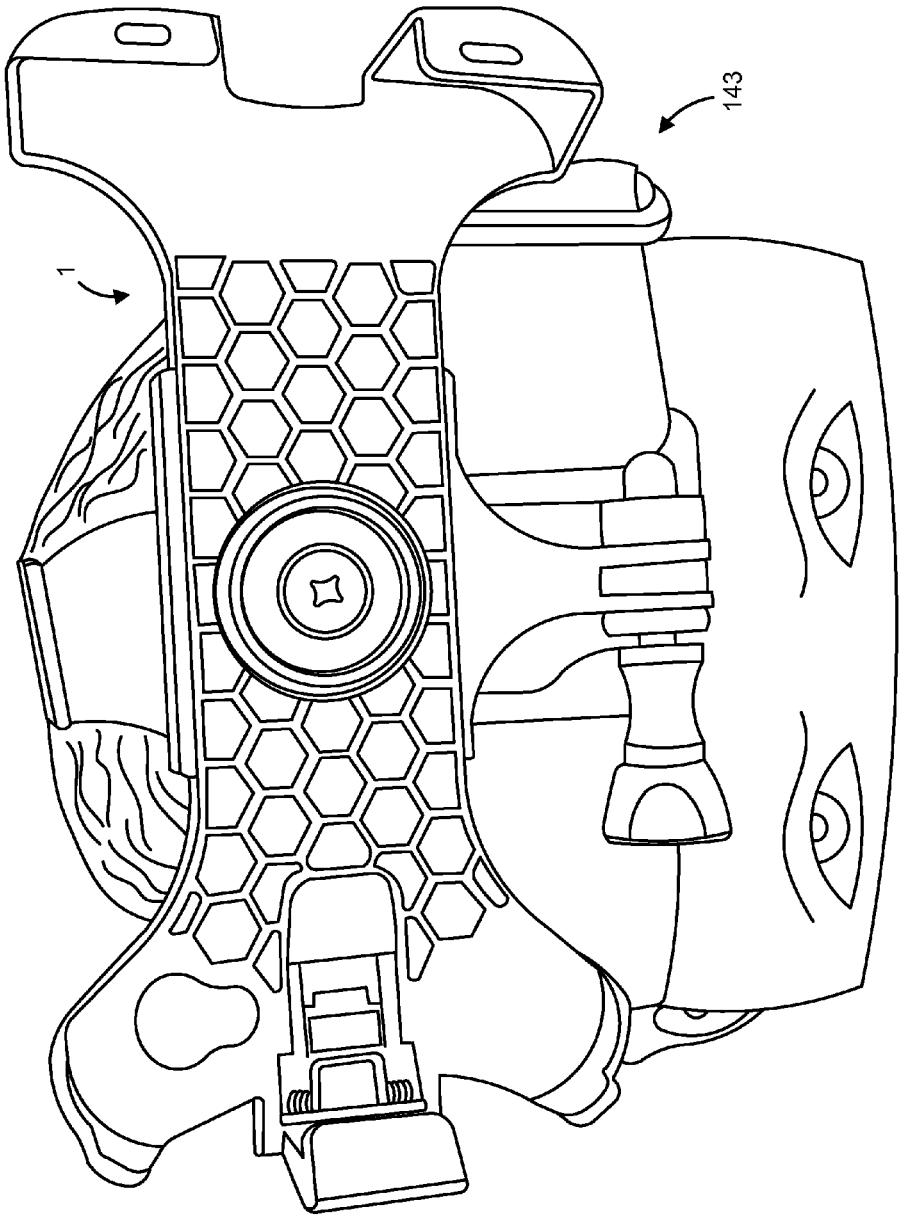

FIG. 15D

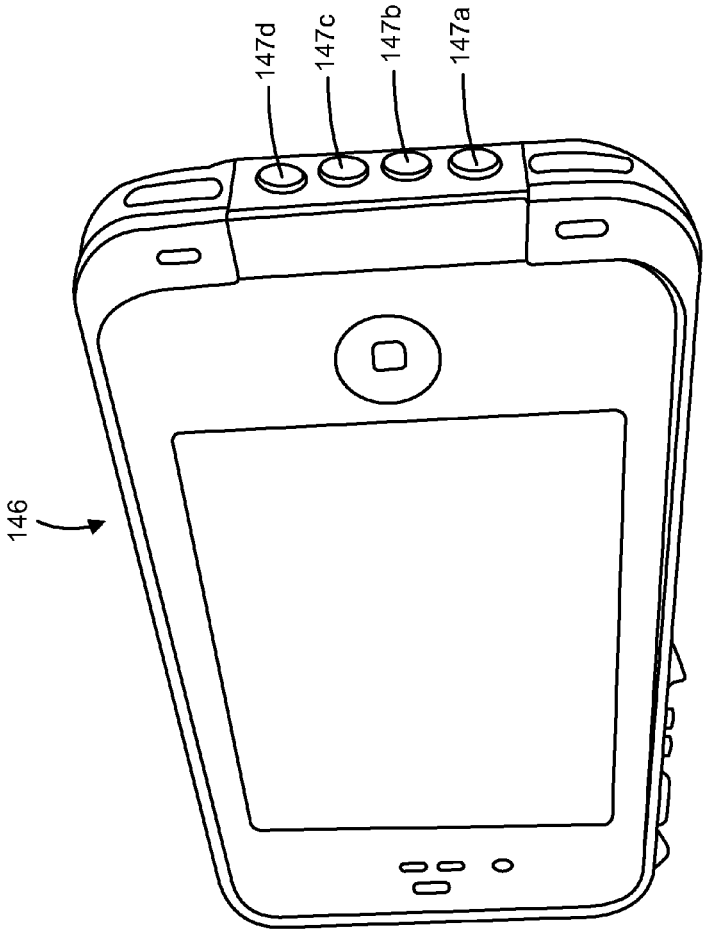

FIG. 16A

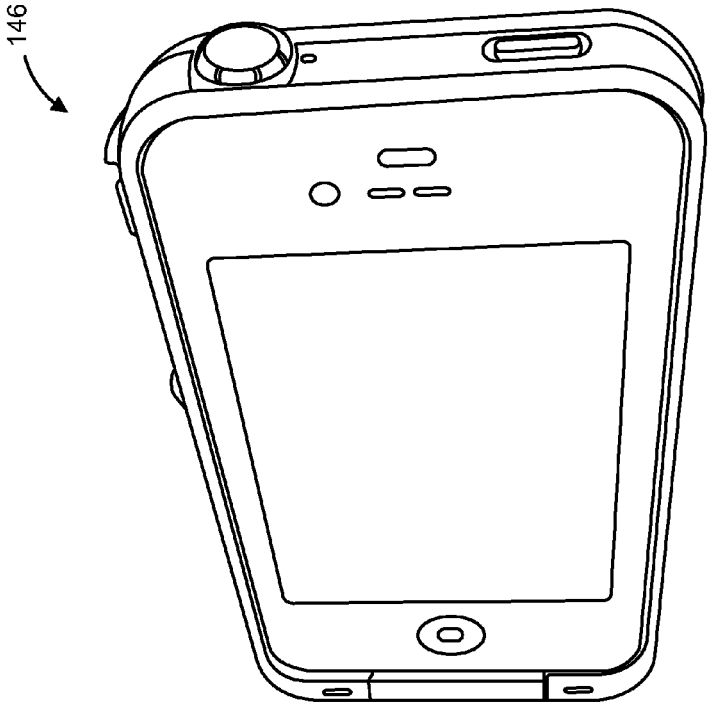

FIG. 16B

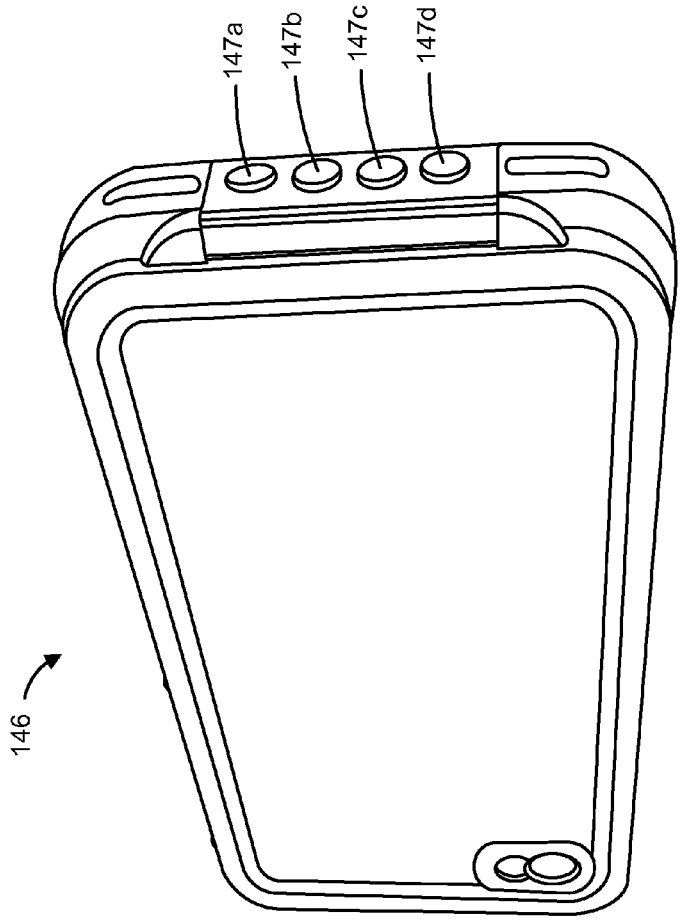

FIG. 16C

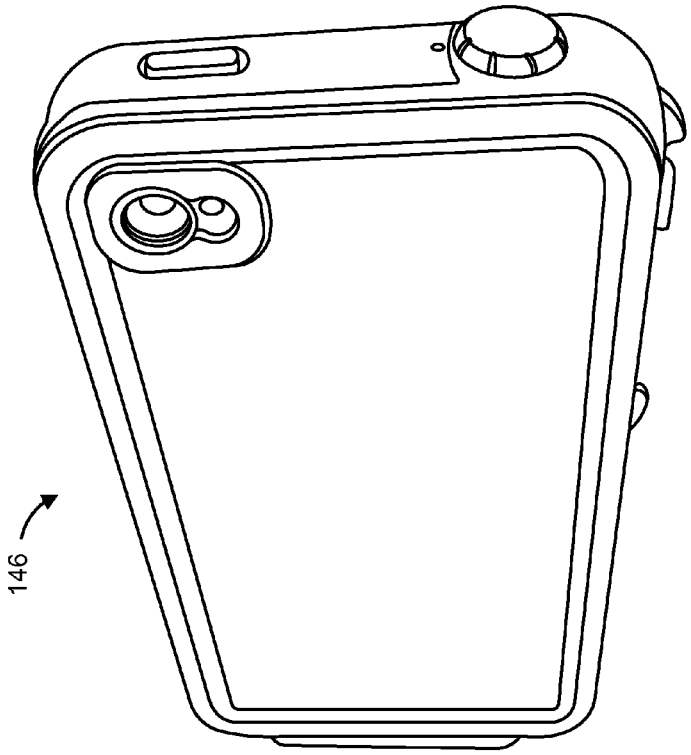

FIG. 16D

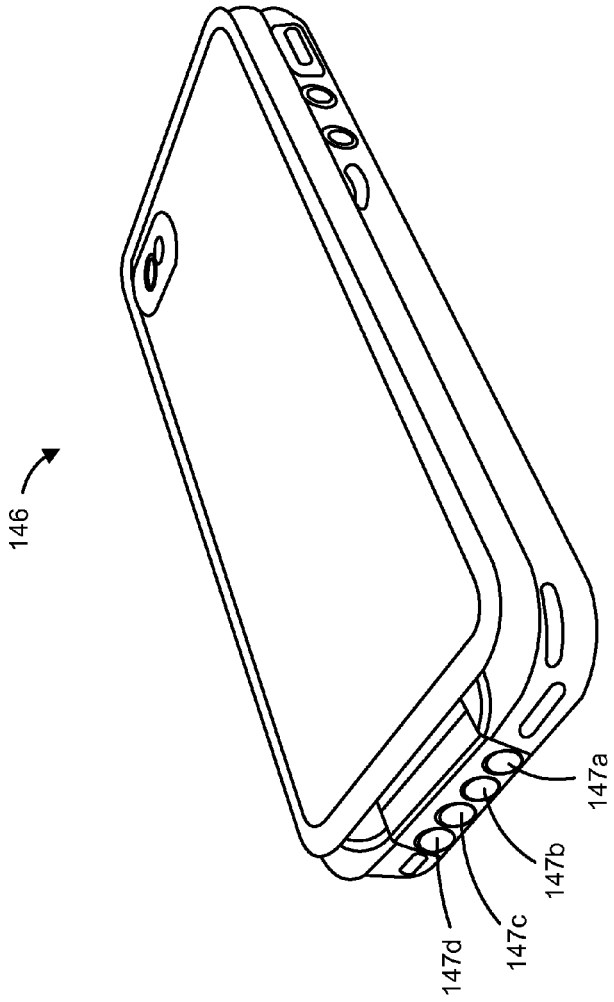

FIG. 16E

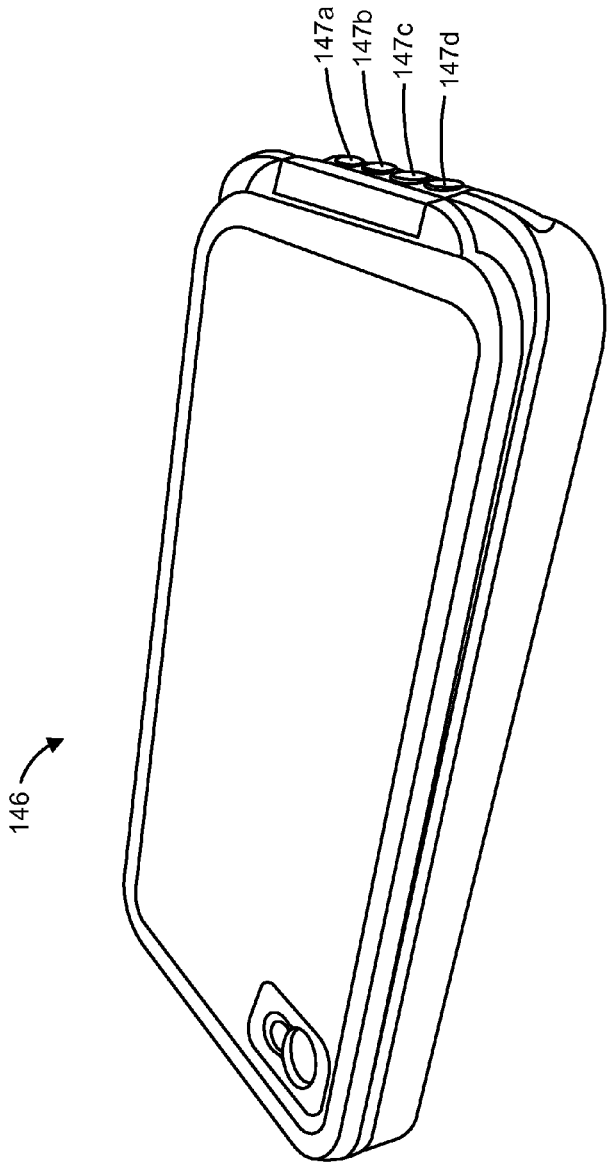

FIG. 16F

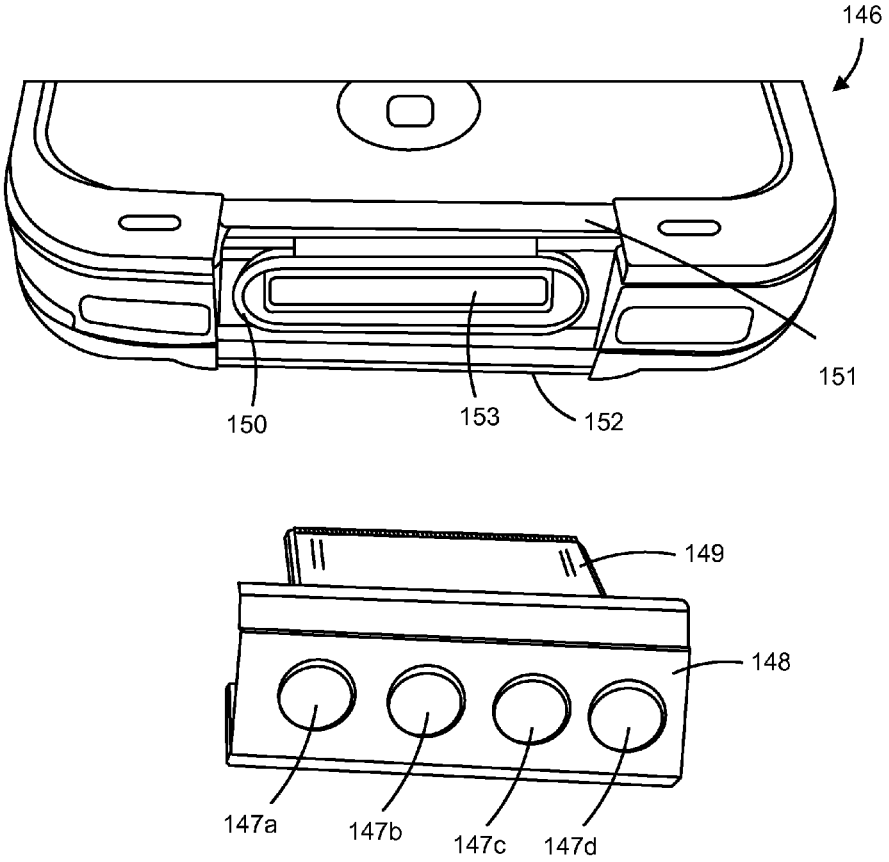

FIG. 17A

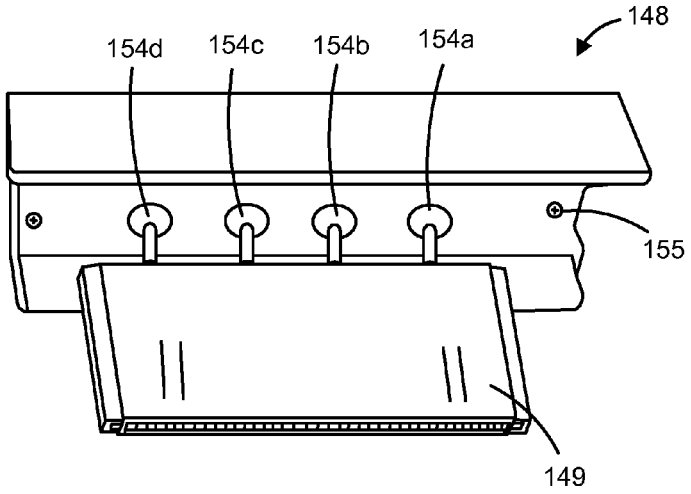

FIG. 17B

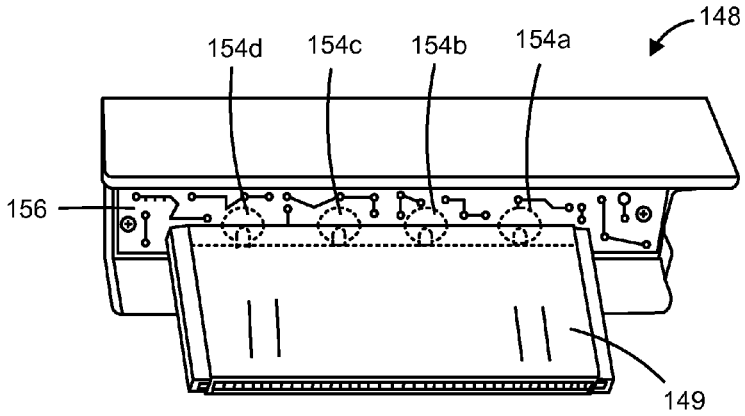

FIG. 17C

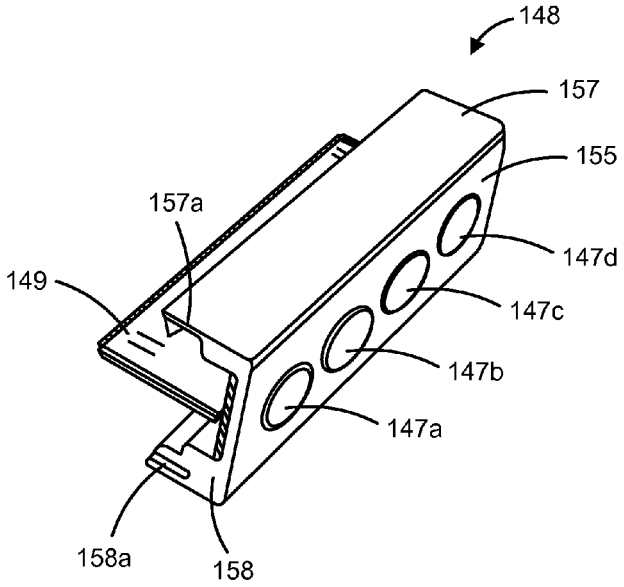

FIG. 17D

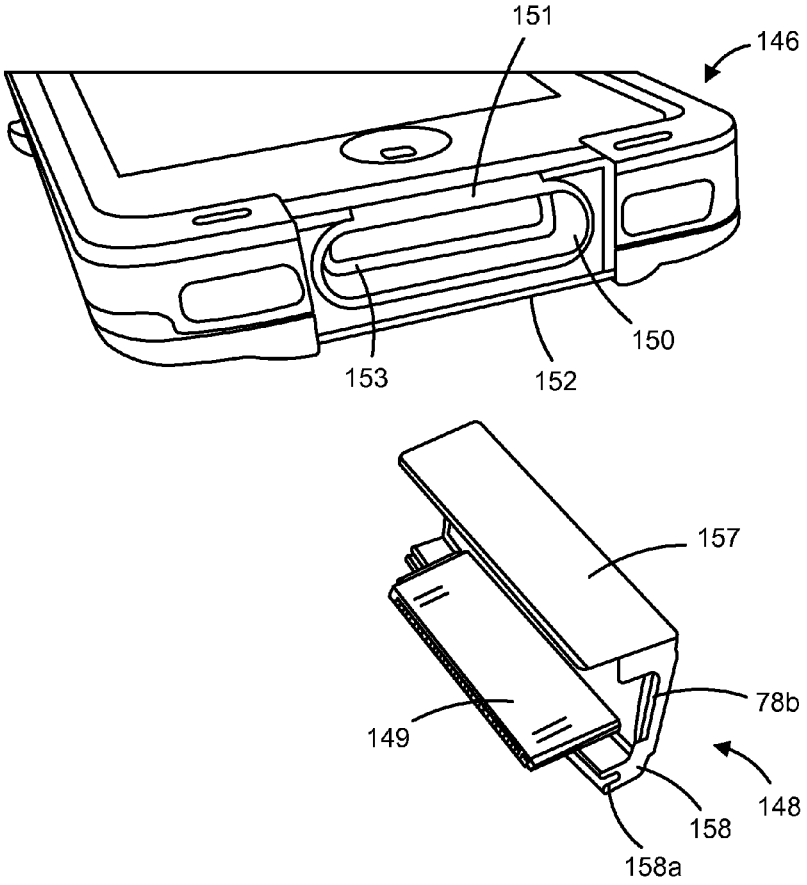

FIG. 17E

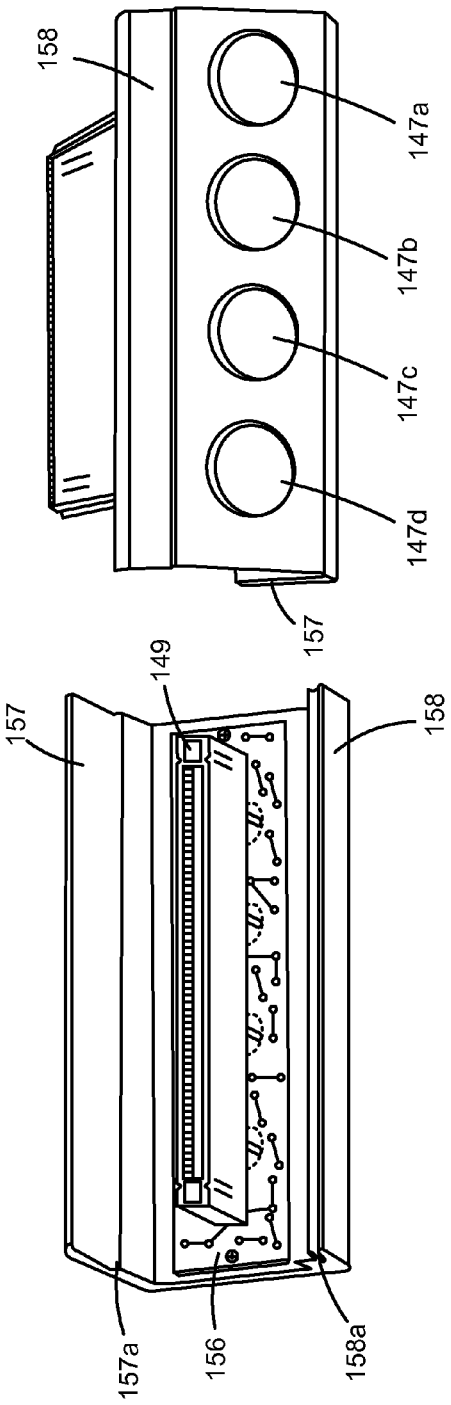

FIG. 17F

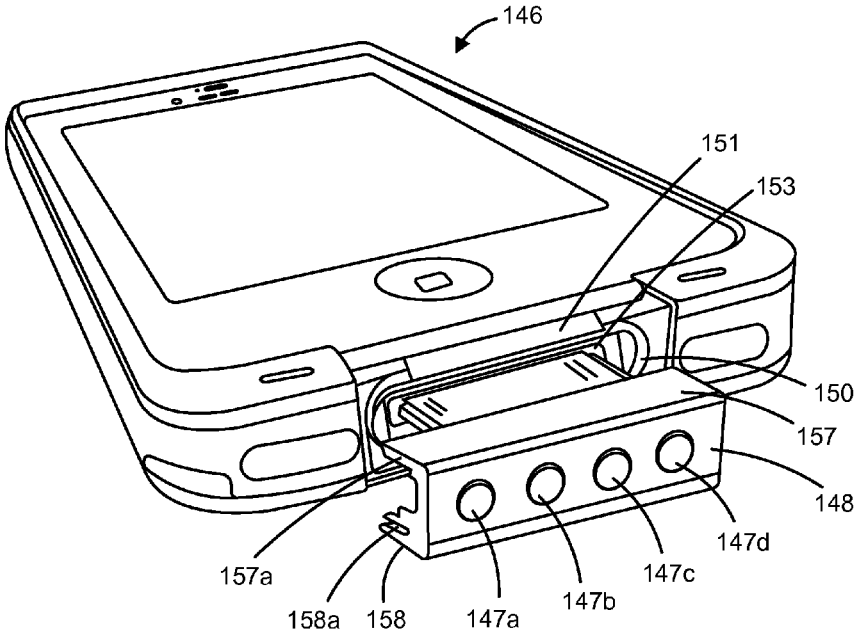

FIG. 17G

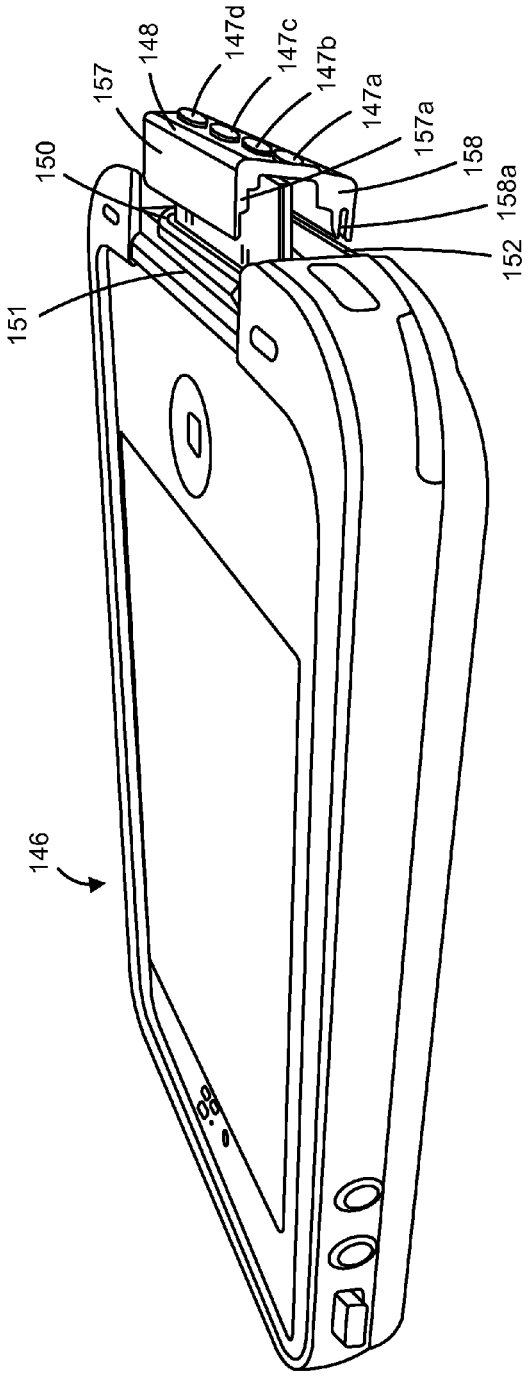

FIG. 17H

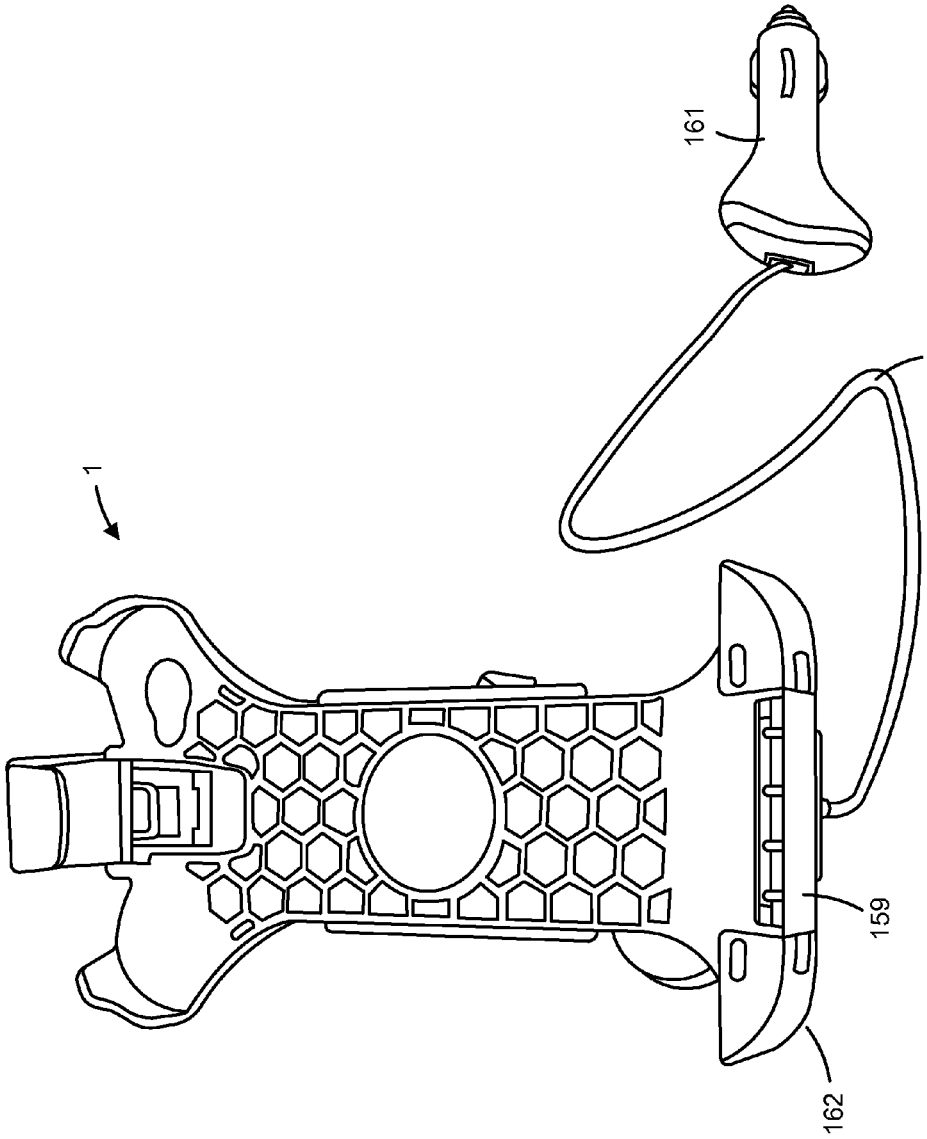

FIG. 18A

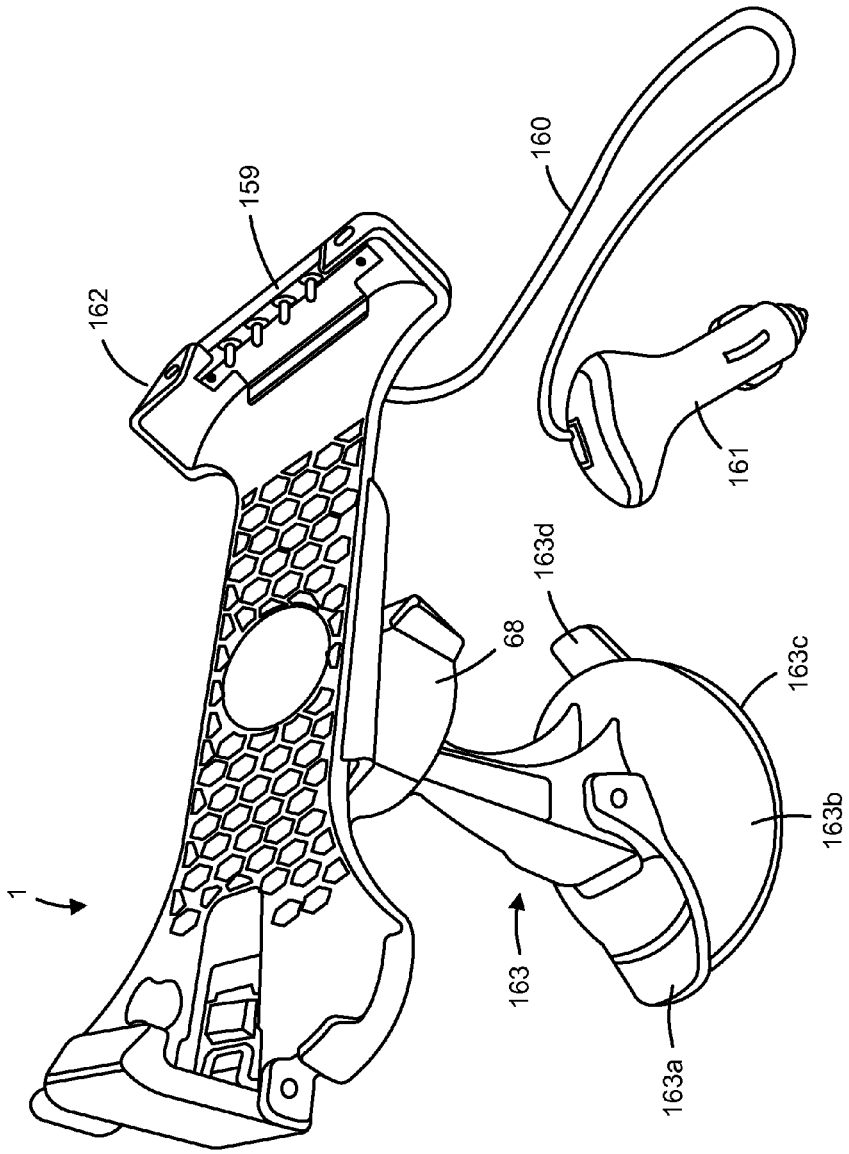

FIG. 18B

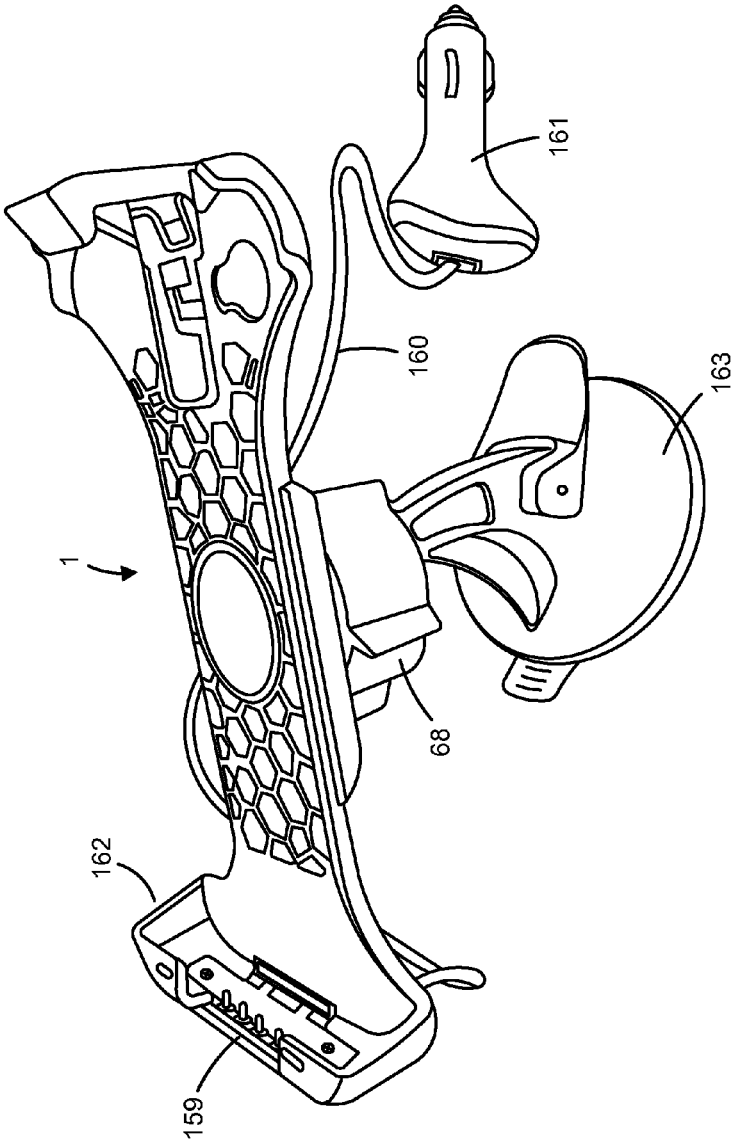

FIG. 18C

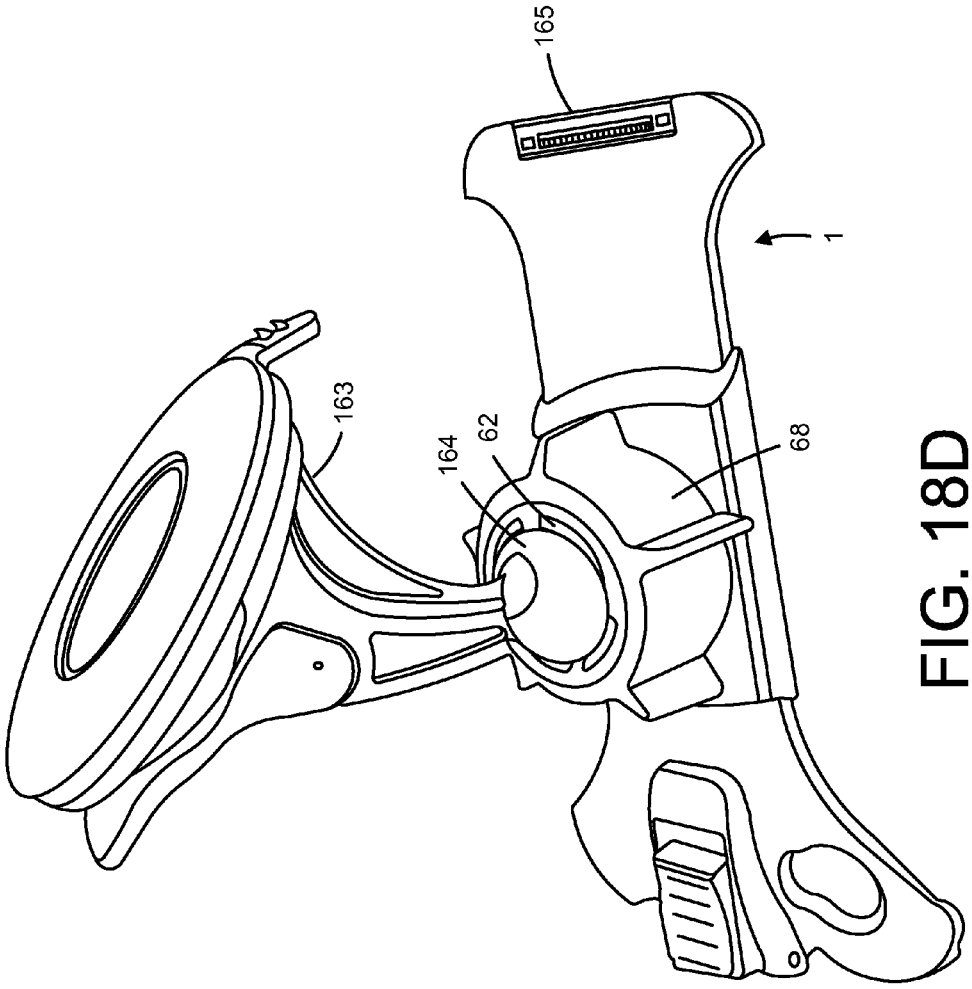

FIG. 18D

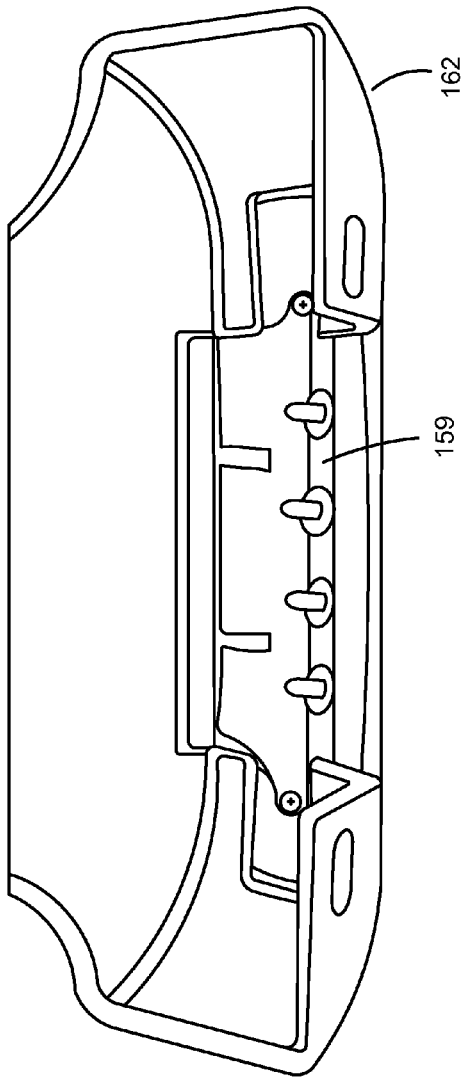

FIG. 19A

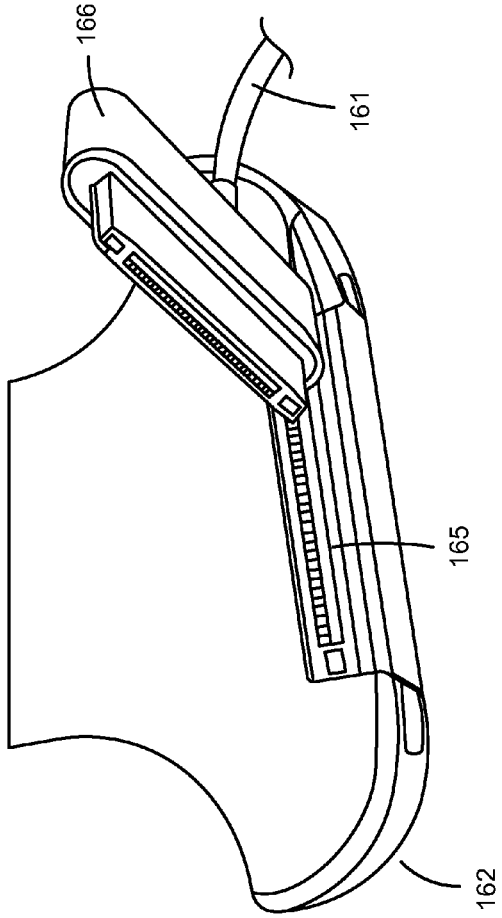

FIG. 19B

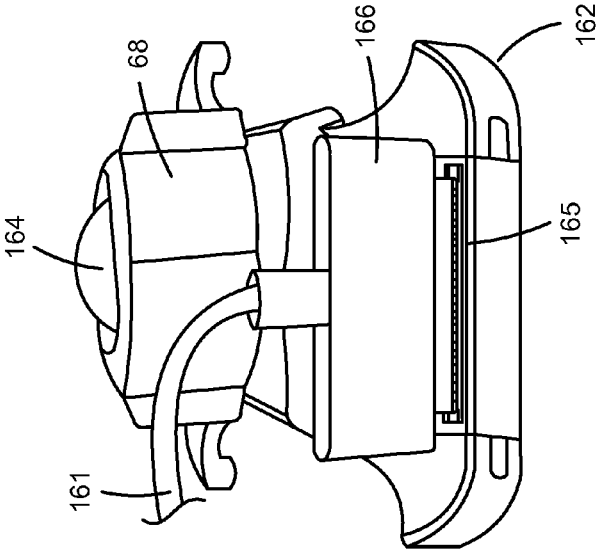

FIG. 19C

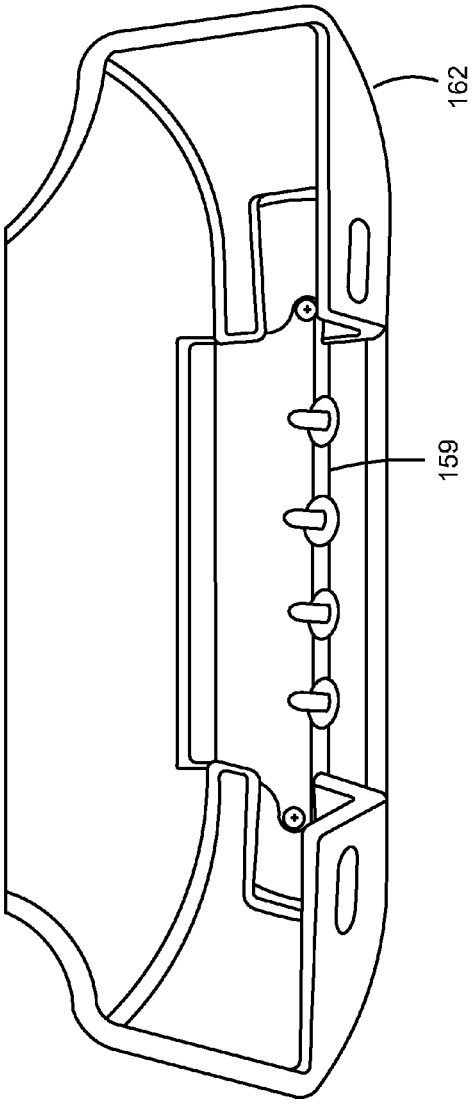

FIG. 19D

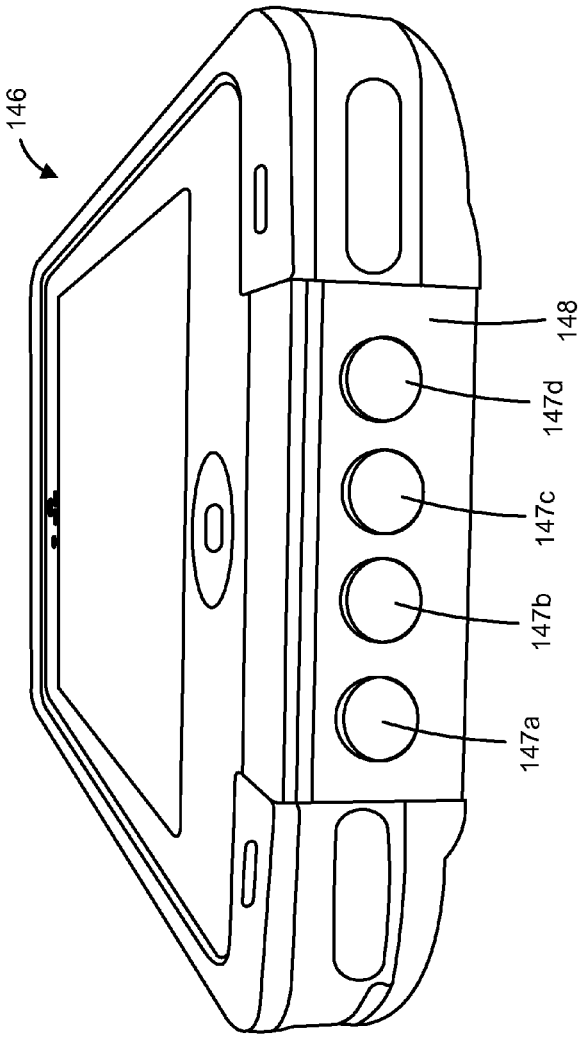

FIG. 19E

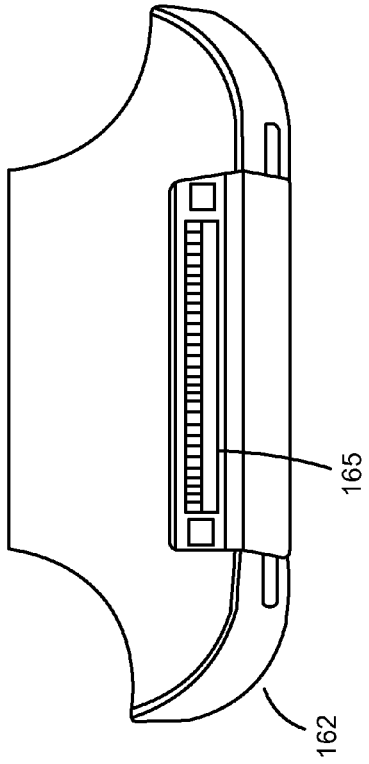

FIG. 19F

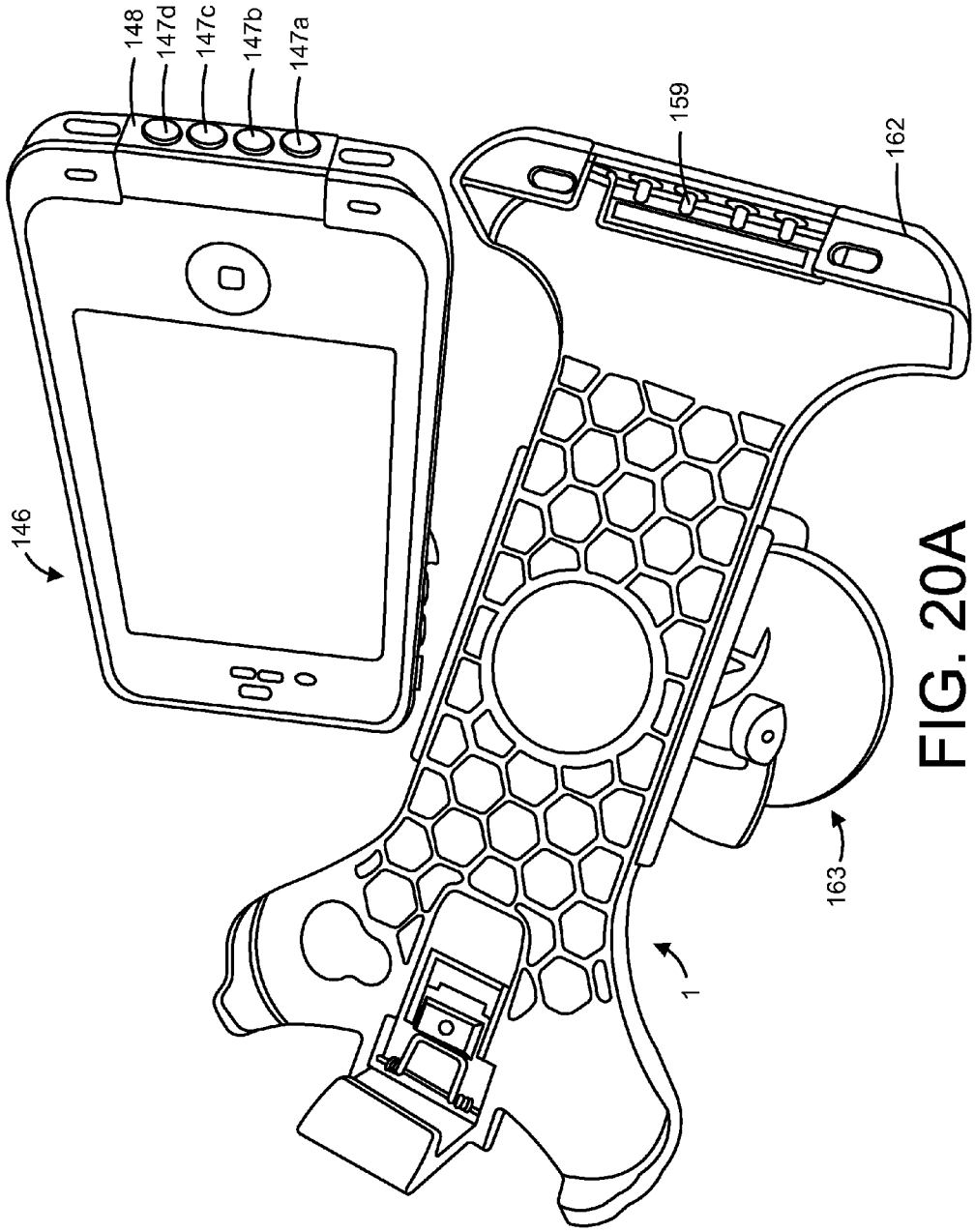

FIG. 20A

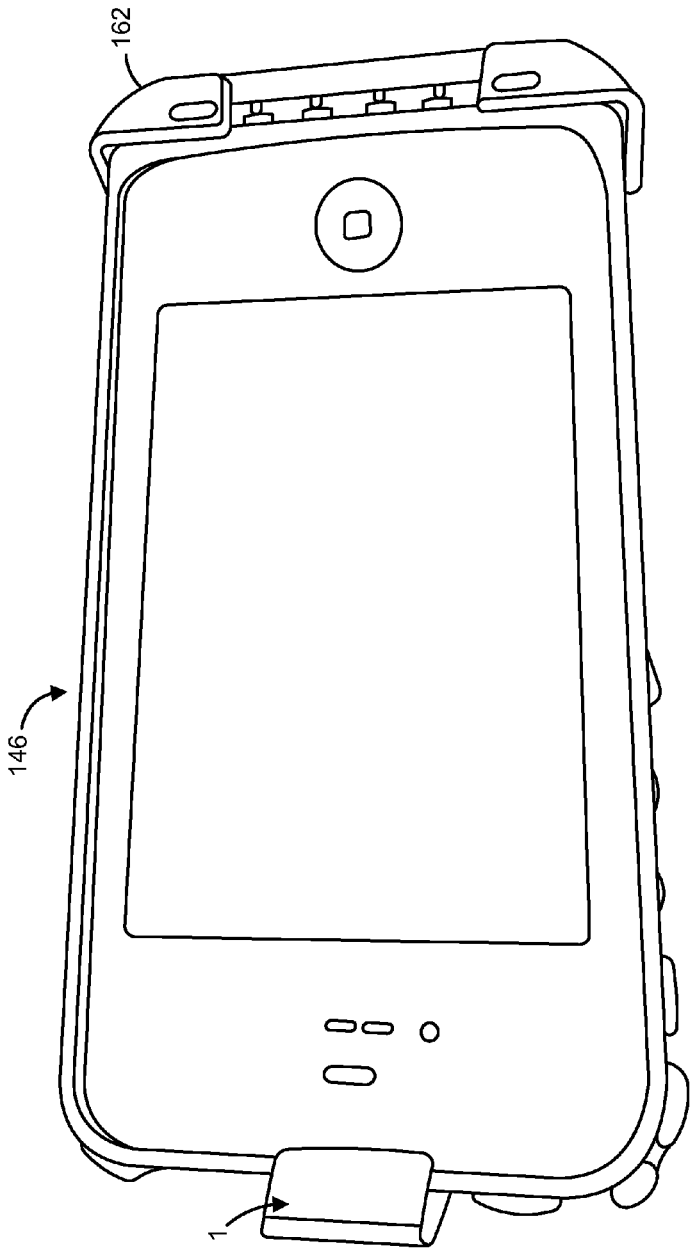

FIG. 20B

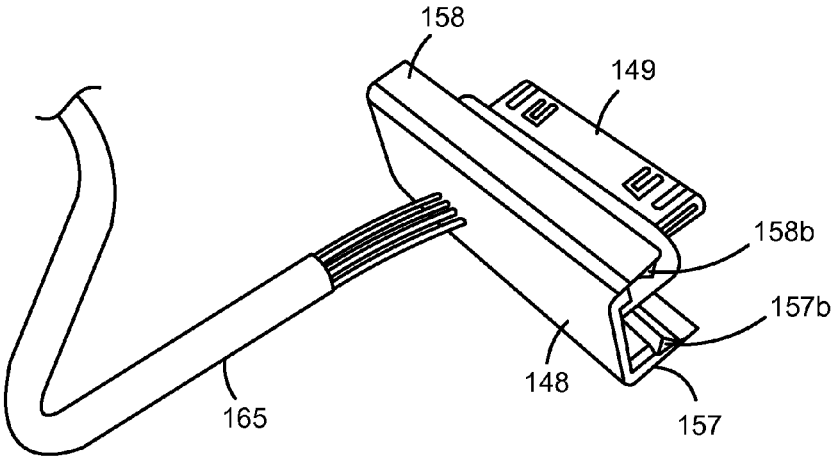

FIG. 21A

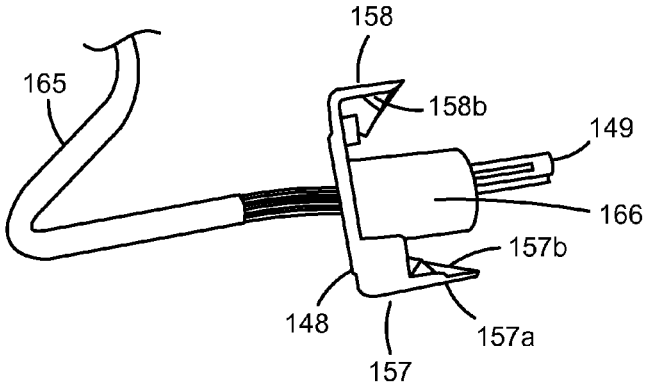

FIG. 21B

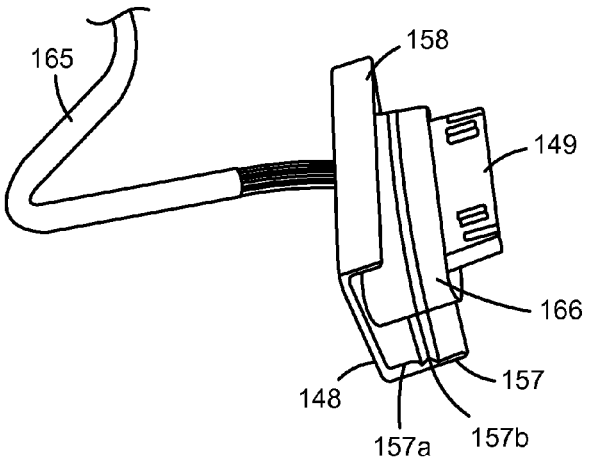

FIG. 21C

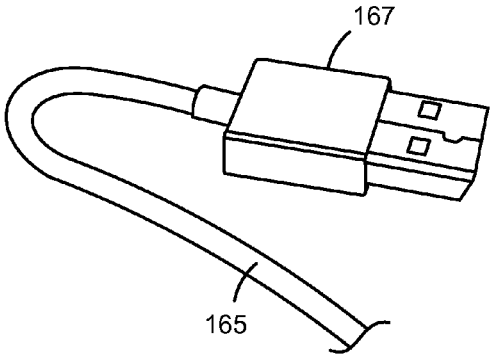

FIG. 21D

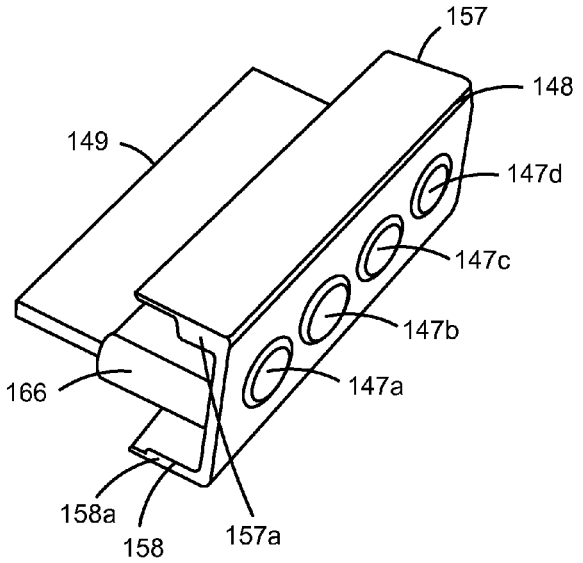

FIG. 21E

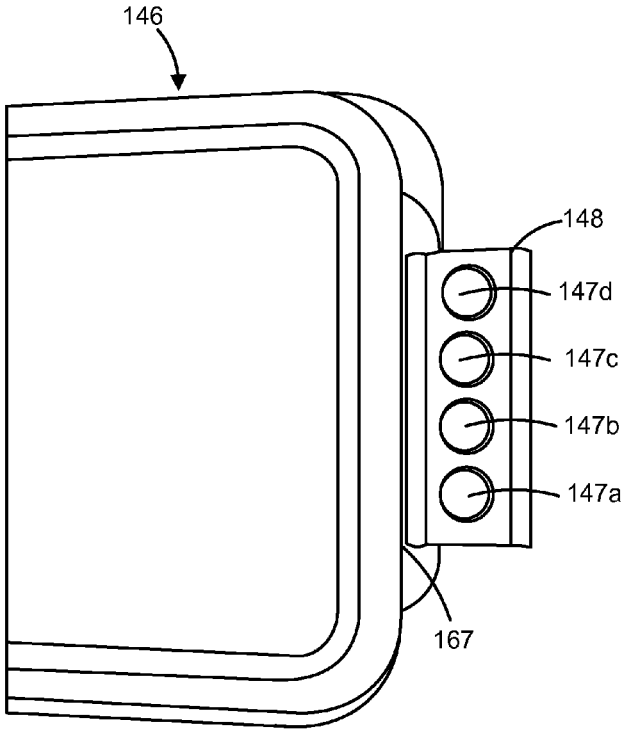

FIG. 21F

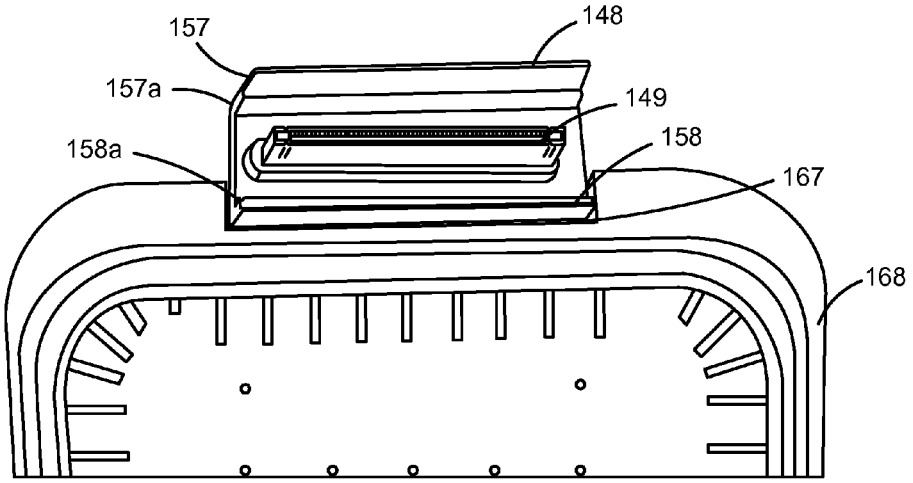

FIG. 21G

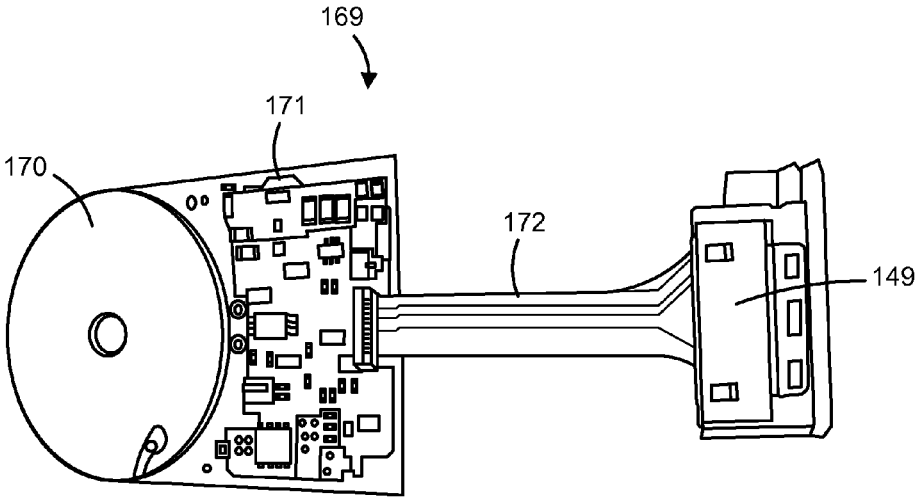

FIG. 22A

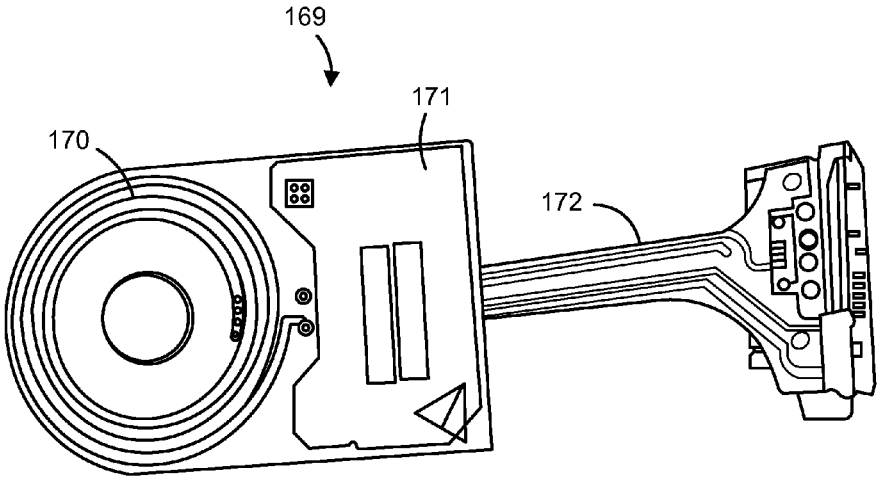

FIG. 22B

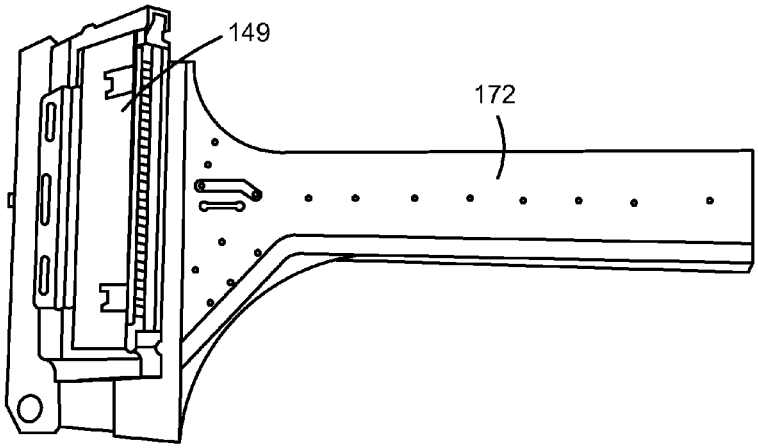

FIG. 22C

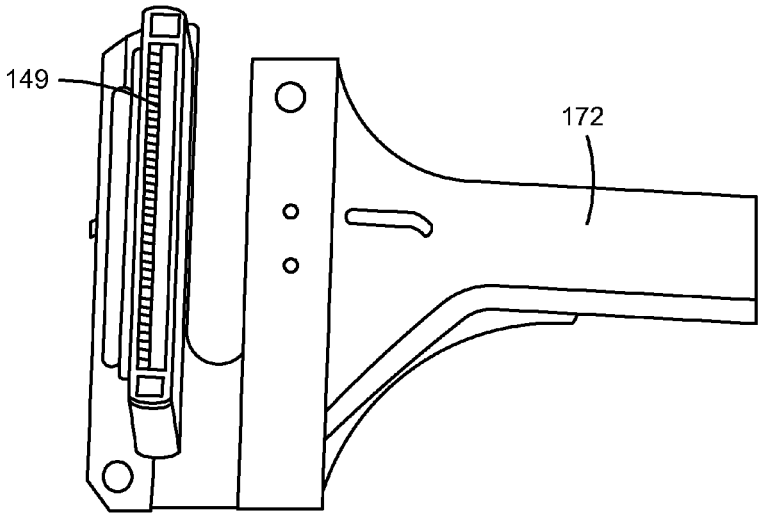

FIG. 22D

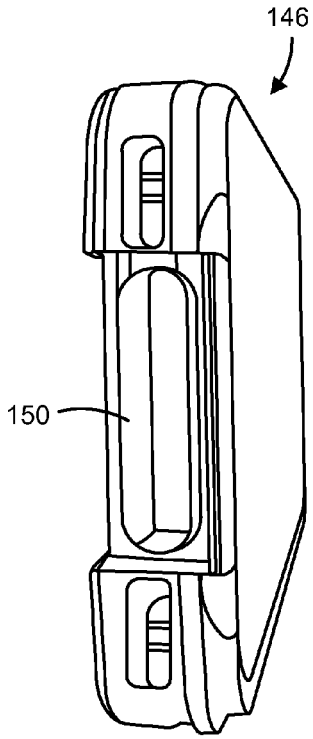

FIG. 22E

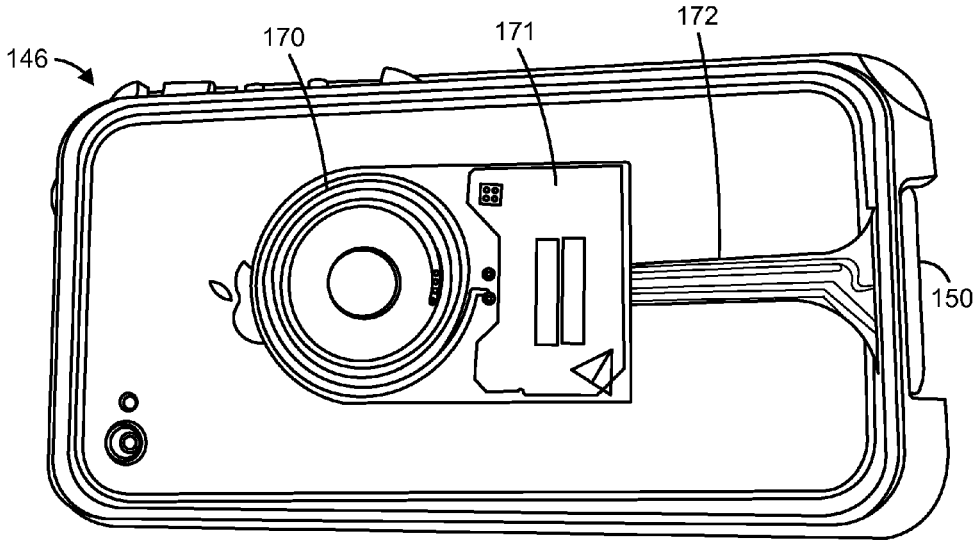

FIG. 22F

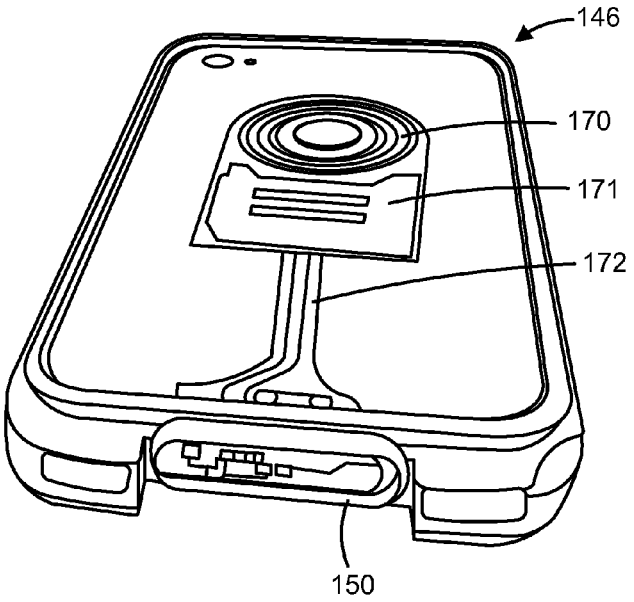

FIG. 22G

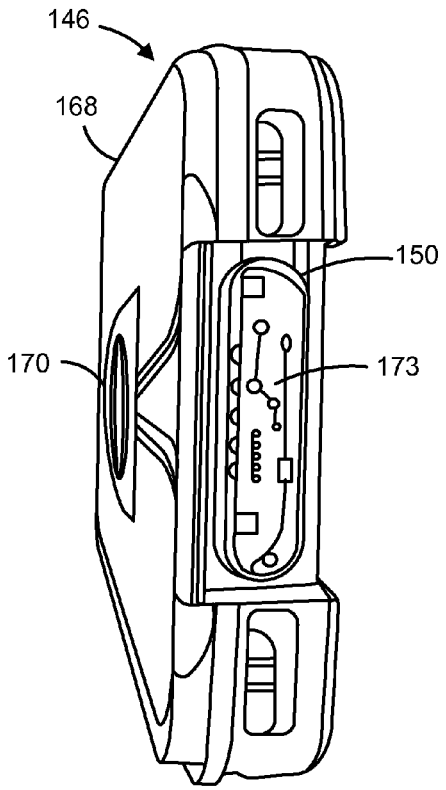

FIG. 22H

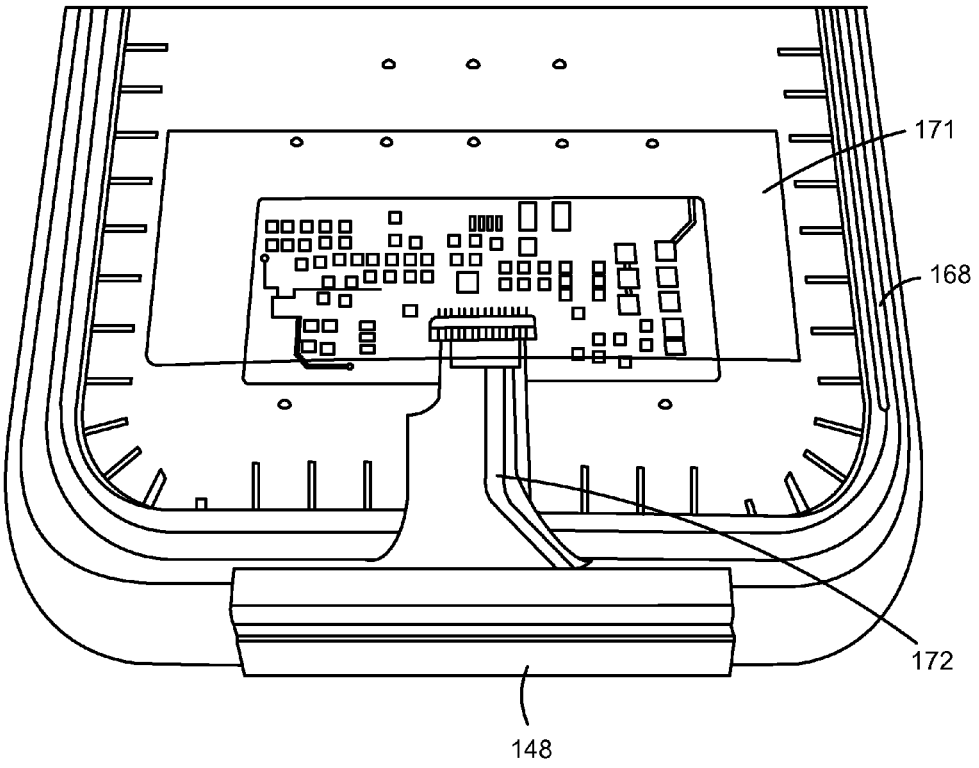

FIG. 22I

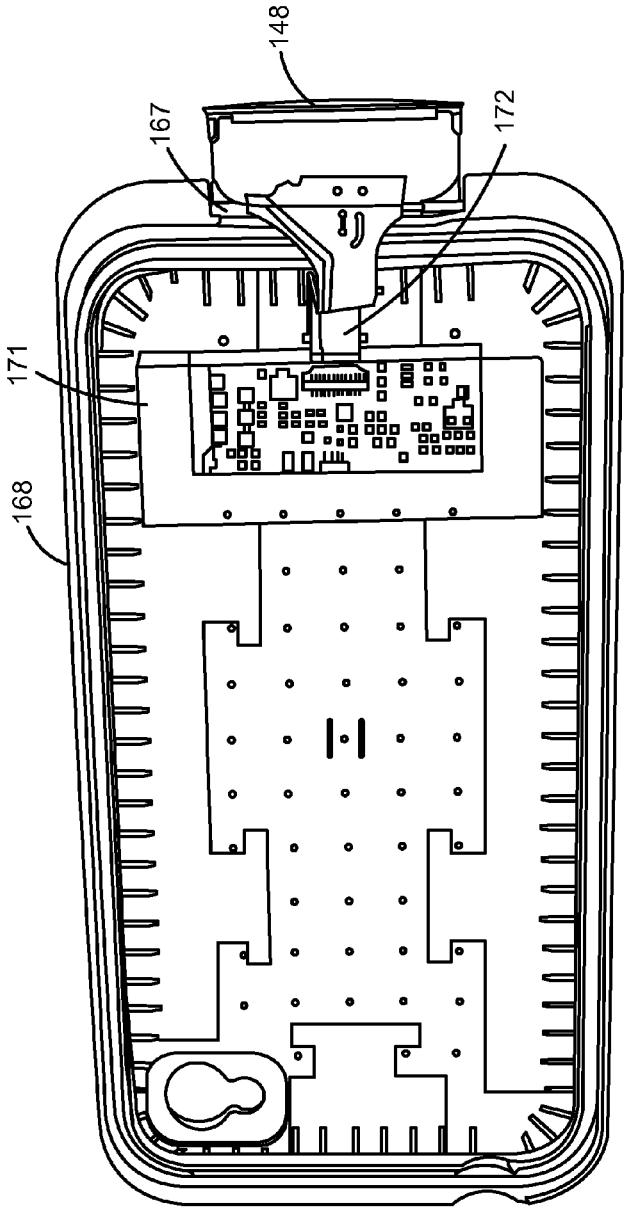

FIG. 22J

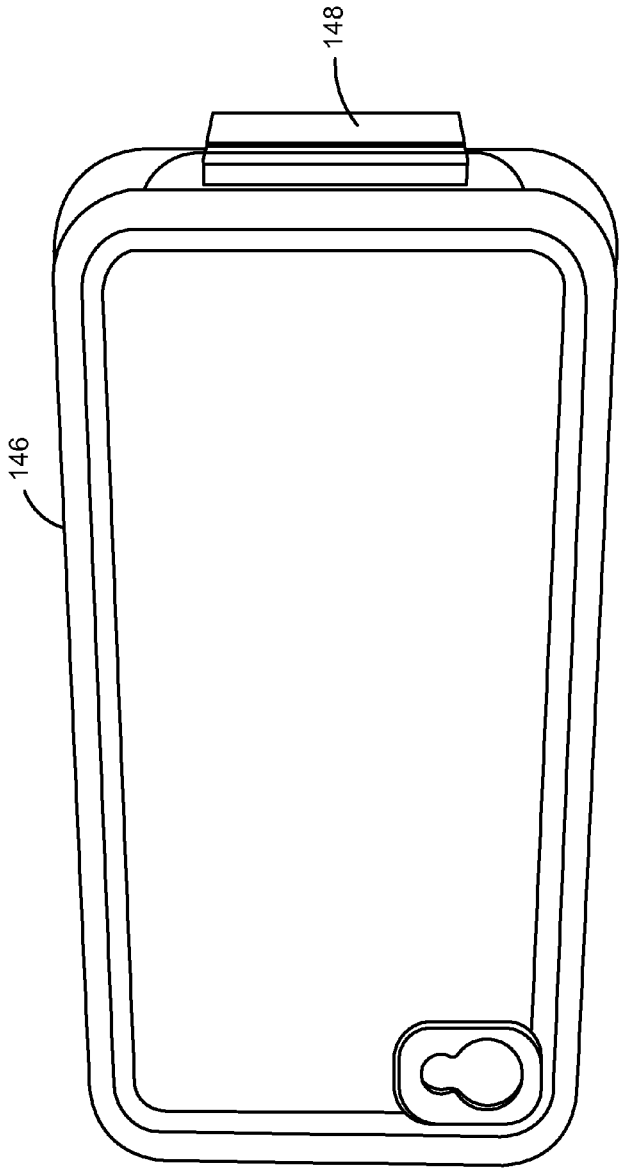

FIG. 22K

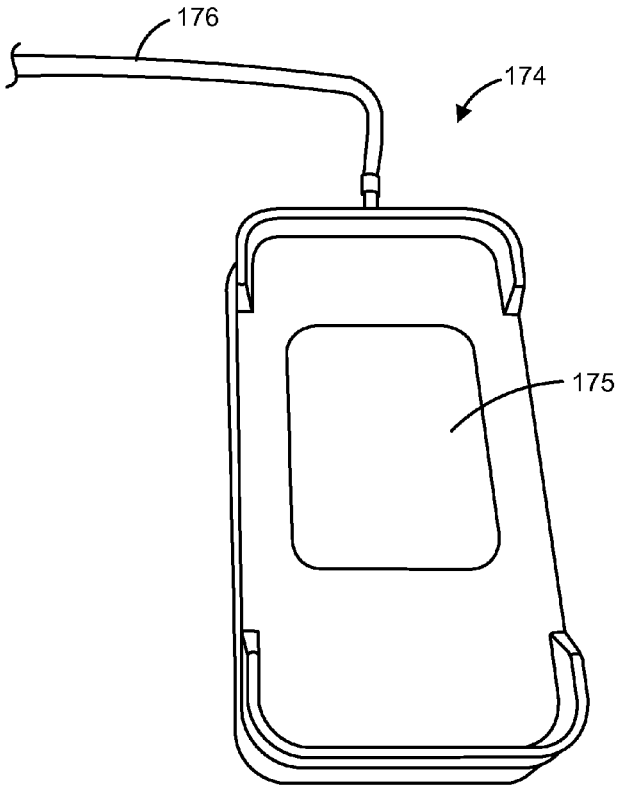

FIG. 22L

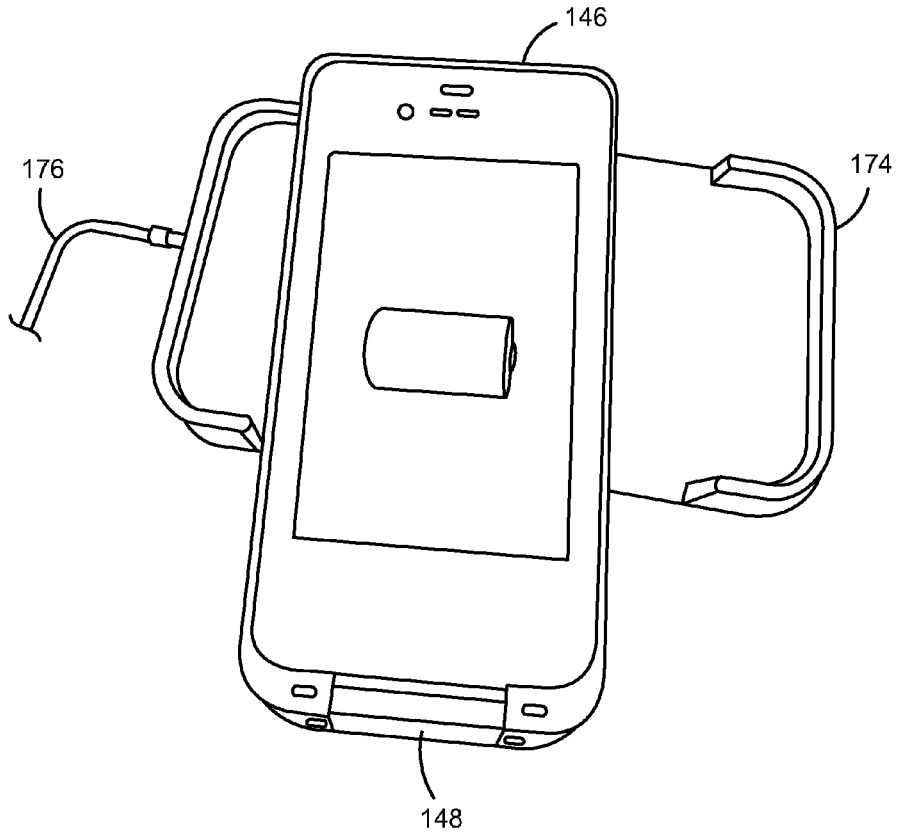

FIG. 22M

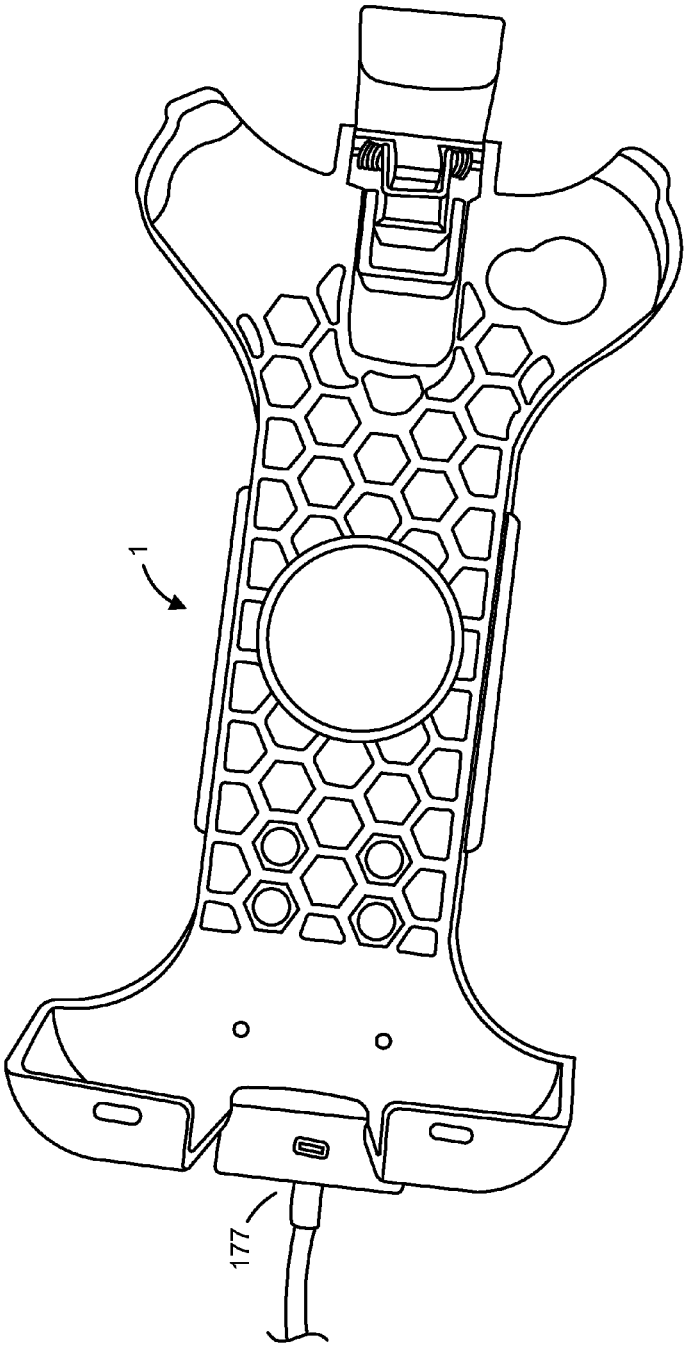

FIG. 23A

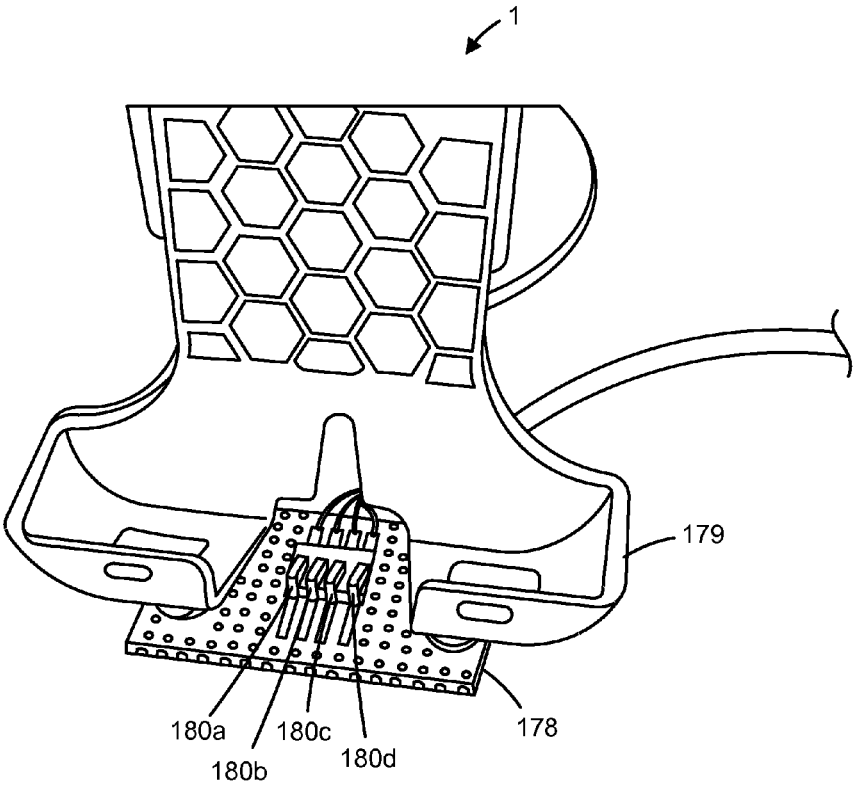

FIG. 23B

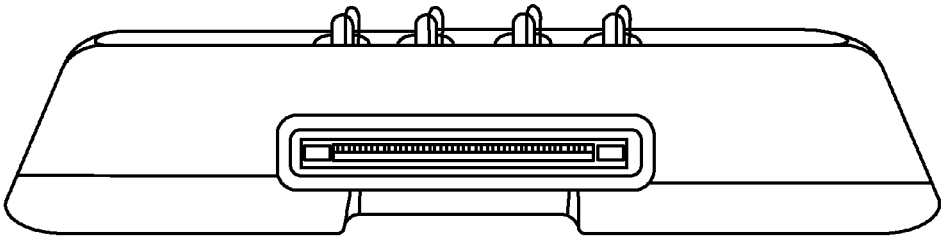

FIG. 23C

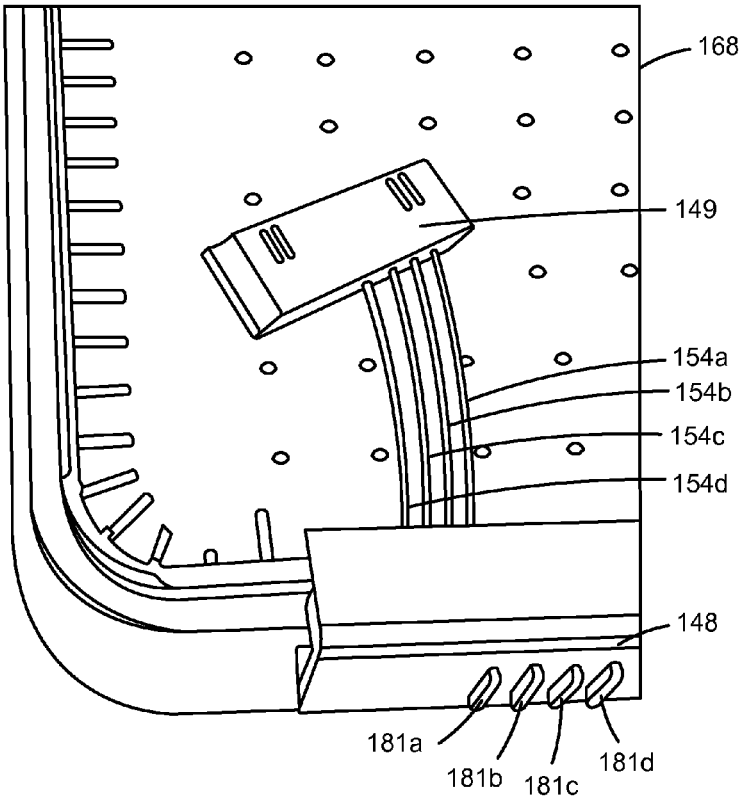

FIG. 23D

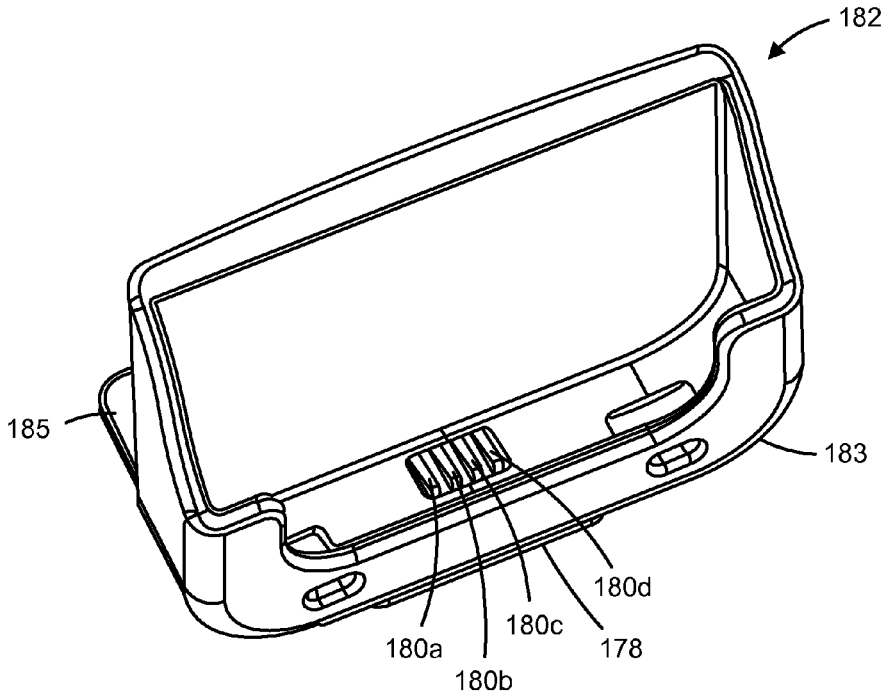

FIG. 23E

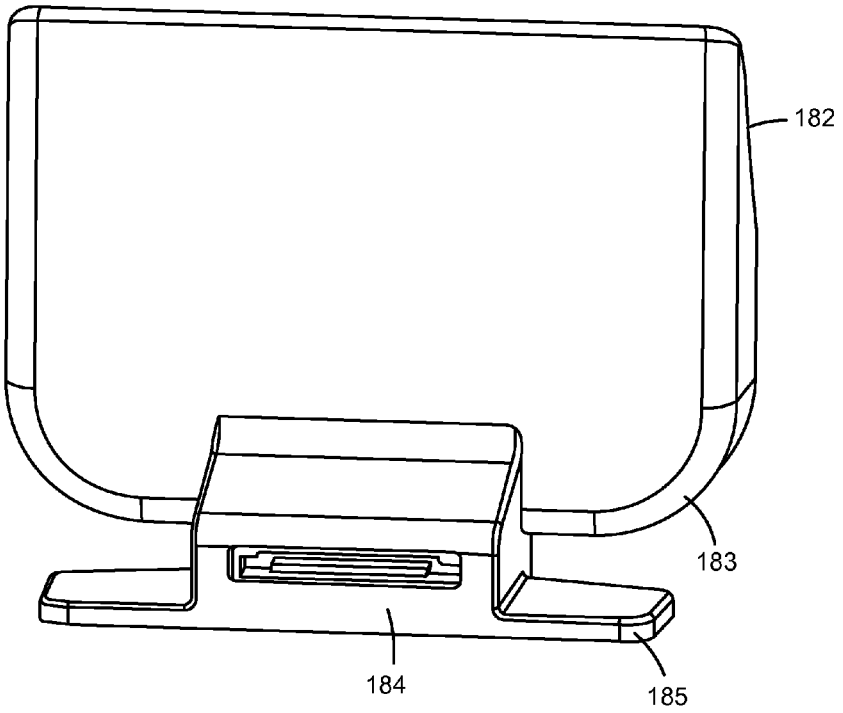

FIG. 23F

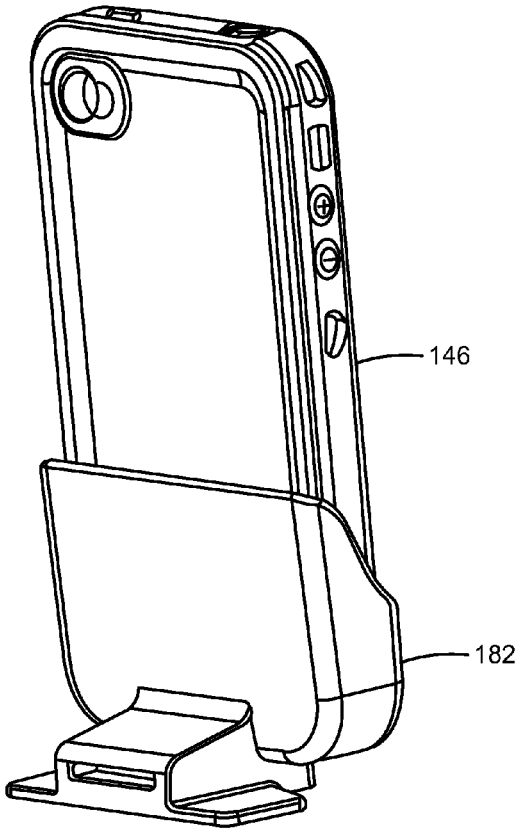

FIG. 23G

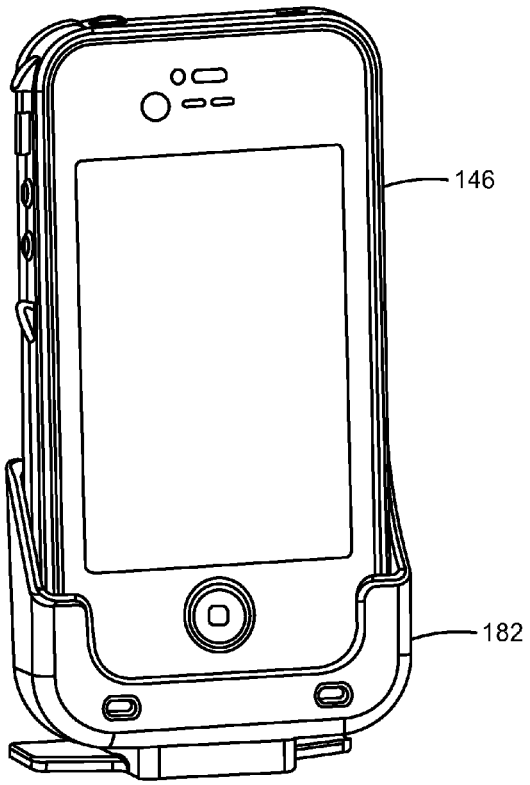

FIG. 23H

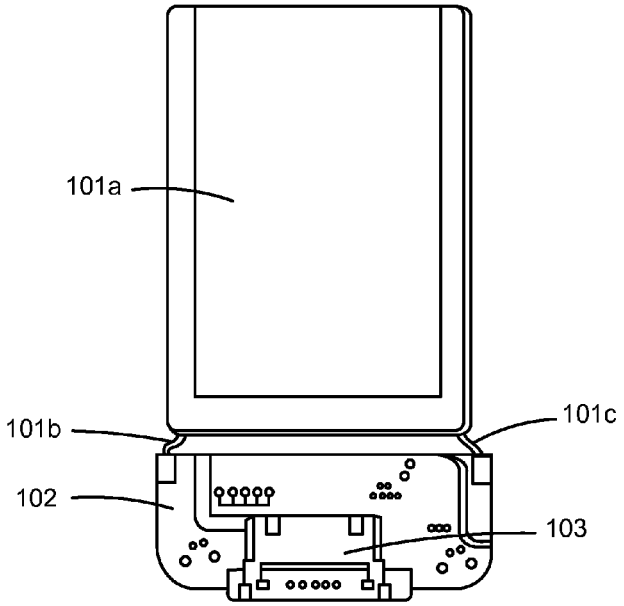

FIG. 24A

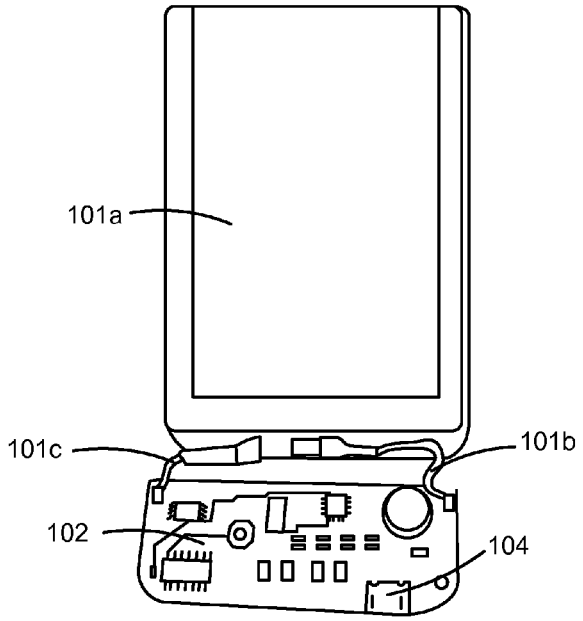

FIG. 24B

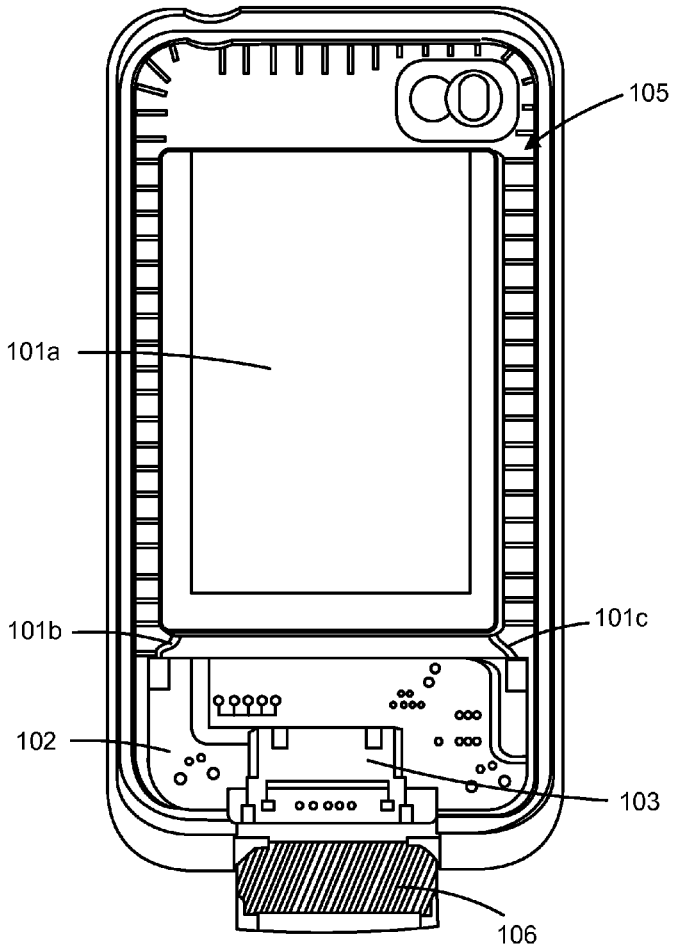

FIG. 24C

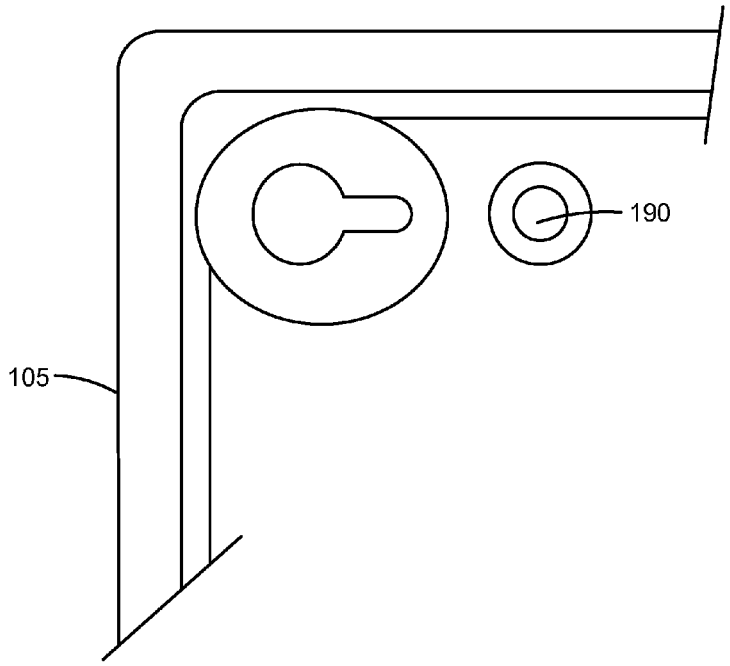

FIG. 24D

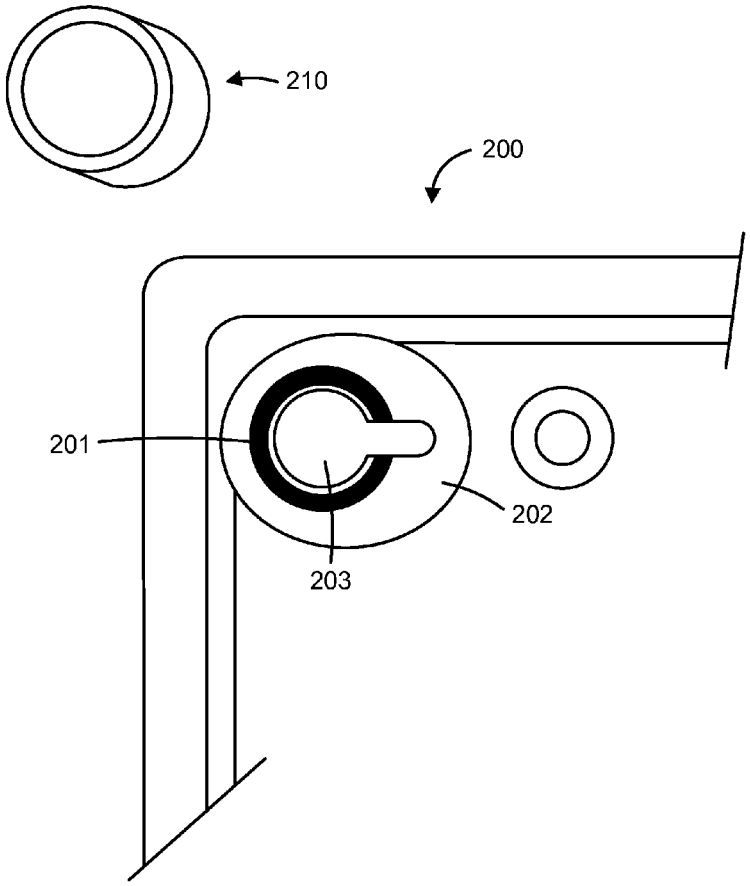

FIG. 25A

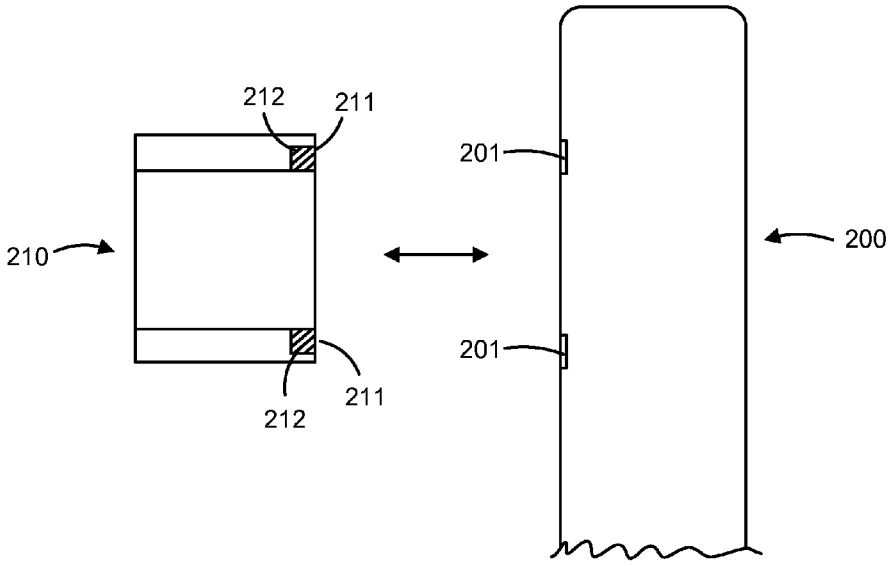

FIG. 25B

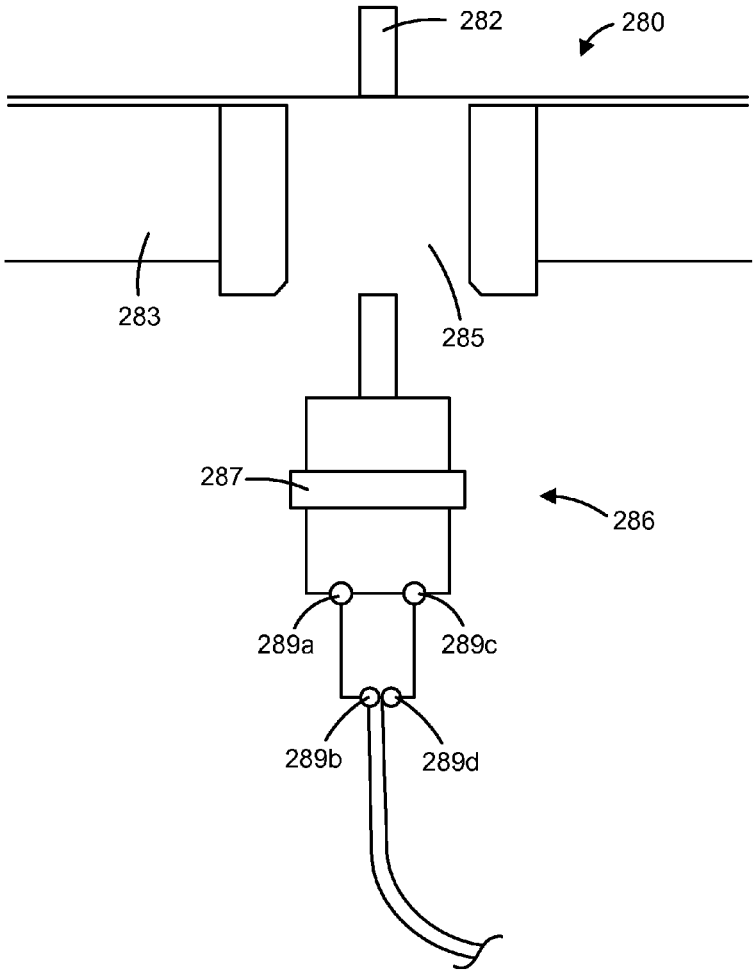

FIG. 26A

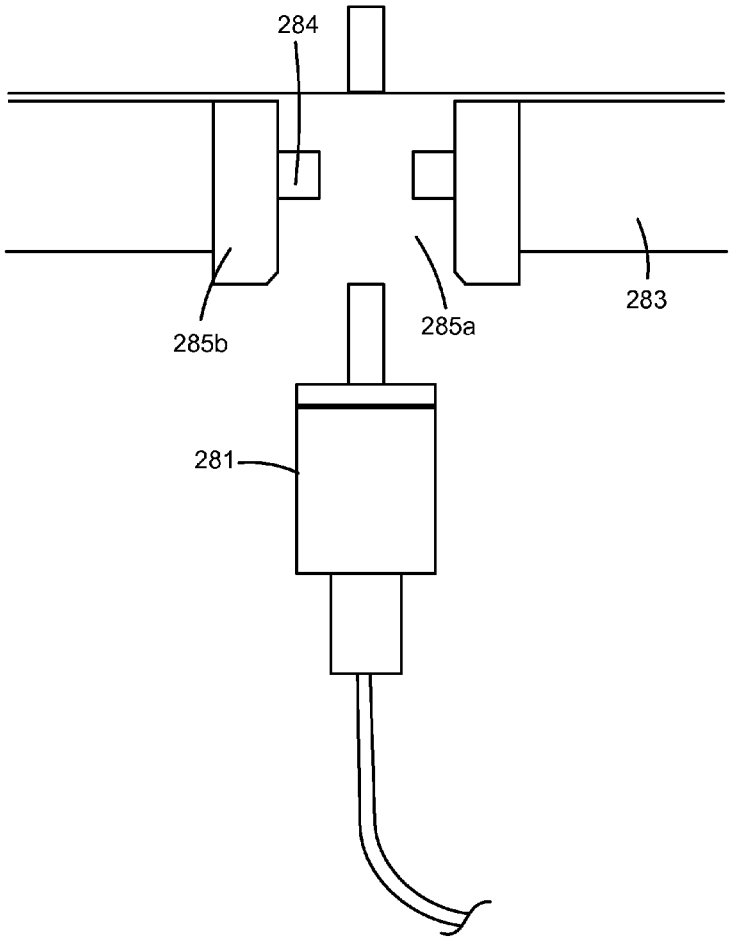

FIG. 26B

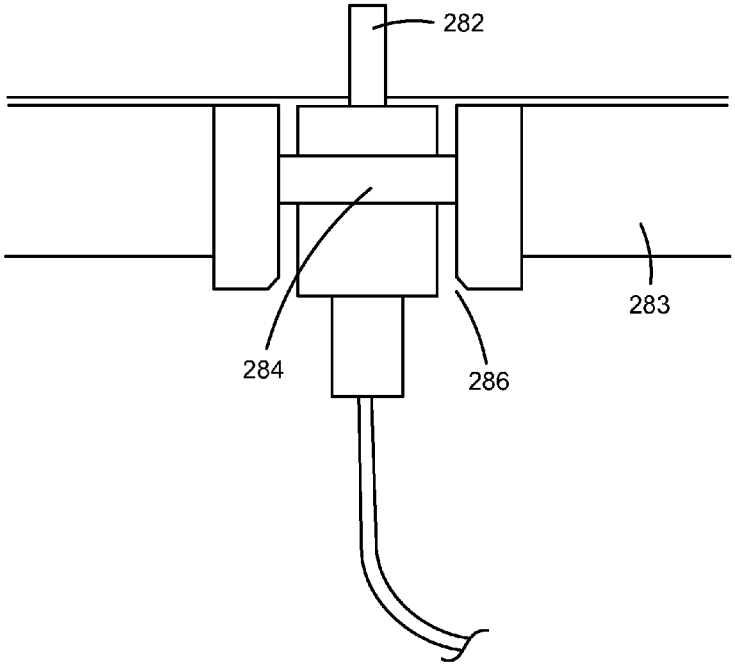

FIG. 26C

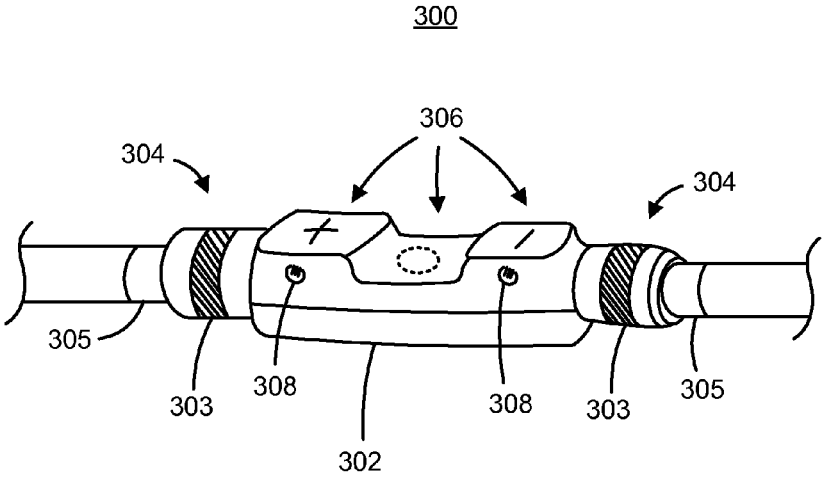

FIG. 27

ACCESSORIES FOR USE WITH HOUSING FOR AN ELECTRONIC DEVICE

CROSS REFERENCE TO RELATED APPLICATION

This application is related to PCT Application Serial No. PCT/US12/71520 entitled, "Accessories For Use With Housing For An Electronic Device" filed on Dec. 21, 2012, and this application claims priority under 35 U.S.C. §119(e) to the following applications: U.S. Provisional Patent Application Ser. No. 61/579,636 entitled "Accessories For Use With Housing For An Electronic Device", filed on Dec. 22, 2011, U.S. Provisional Patent Application Ser. No. 61/649,911 entitled "Accessories For Use With Housing For An Electronic Device", filed on May 21, 2012, U.S. Provisional Patent Application Ser. No. 61/694,744 entitled "Accessories For Use With Housing For An Electronic Device", filed on Aug. 29, 2012, and U.S. Provisional Patent Application Ser. No. 61/708,629 entitled "Accessories For Use With Housing For An Electronic Device", filed on Oct. 1, 2012, the entirety of which is incorporated herein by reference.

FIELD

This disclosure relates generally to a device for retaining an electronic device as well as for methods for using the device for the purpose of doing the same. In various instances, the electronic device includes a housing and the retaining device is adapted for interfacing with the housing of the electronic device. The housing may be a separate unit from the electronic device or part of the electronic device itself. In various instances, the housing is a separate unit from the electronic device, within which the electronic device is fitted. In certain instances, the housing for the electronic device is adapted for protecting the device from one or more of shock, liquid, dust, snow, and the like. The electronic device may be any suitable electronic device, such as a computer, mobile computer, notebook computer, tablet computer, telephone, personal digital assistant, or the like.

BACKGROUND

Electronic devices are well known and widely used. For instance, mobile computers, tablet PCs, telephones, personal digital assistants, and the like are electronic devices that are capable of receiving inputs, calculating data pertaining to those inputs, and generating outputs concerning the same. Such data may be important in maximizing ones efficiency and/or enjoyment when participating in the various activities of daily life. Consequently, such electronic devices that are capable of collecting, compiling, and outputting such data are also important in maximizing ones efficiency and/or enjoyment when interacting with such varied activities present in daily life.

However, in participating in these various activities can expose such electronic devices to conditions such as rain, dirt, dust, mud, snow, and water (in all of its forms) that can be damaging to these electronic devices. Additionally, the typical housing that encases the components of these electronic devices are fragile or otherwise breakable and can be damaged by mistreatment and/or other inappropriate handling, such as by dropping. It is, therefore, useful to have a housing within which an electronic device, or the components thereof, in need of protection may be housed so as to protect it from inclement conditions, mistreatment, and/or inappropriate handling. Consequently, the housing of the actual electronic

device itself may be ruggedized, or a separate housing designed to house the electronic device may be provided so as to protect the electronic device, or its components, from such damage. One such housing is provided in U.S.S.N. 12, which is incorporated herein by reference in its entirety.

An unfortunate circumstance of ruggedizing a housing of the electronic device itself and/or providing a separate protective housing for the same is that it increases the size of the electronic device making transportation of the device more cumbersome. Accordingly, on one hand, providing environmental protection for such electronic devices allows them to be used in situations wherein the fear of breakage would otherwise prevent their use, however, such protection makes their transport more difficult and therefore decreases their usability. There is therefore a need in the art for a mechanism whereby such portable electronic devices are capable of being protected at the same time as being easily transported. It would further be useful to develop a transportation mechanism that increases the usability of such electronic devices during transportation.

The present disclosure is directed to an apparatus and system for more easily transporting a housing of an object, such as a device and/or the components thereof, as well as methods for using the same, in a manner that offers both protection for the device from adverse environmental conditions, inclement weather, mishandling and/or damage, such as from contacting a fluid, such as water, at the same time as increasing its usability while being transported.

SUMMARY

In one aspect, a device or a system of devices for one or more of protecting, retaining, and/or transporting an object, such as a device, for instance, an electronic device, is provided. In its most basic form, the device may be a sled, which sled is configured for retaining an electronic device and/or an electronic device that has been housed within a housing such as a ruggedized housing. The retaining sled itself may then be adapted in various manners so as to be easily transported in one or more of a multiplicity of ways.

Accordingly, in one instance, a sled for retaining an electronic device is provided. The sled includes an elongated member having a proximal portion and a distal portion, which elongated member is circumscribed by a perimeter portion. The elongated member is configured for interfacing with a surface of an electronic device or a housing that is capable of housing the same, e.g., a front or back surface of an electronic device or a housing, such as a ruggedized housing, therefore. One or both of the elongated member or the perimeter portion are configured for supporting the electronic device while in the sled.

The sled further includes at least one clasping mechanism that is configured for removably retaining the electronic device within the sled. Any suitable clasping mechanism may be employed so long as such clasping mechanism is capable of interfacing with a portion of the electronic device, and/or a housing therefore, as well as the sled in such a manner that by said interaction the electronic device is retained within the sled. The clasping mechanism may be positioned anywhere along the sled, and in some instances, is positioned along the perimeter portion, such as at one or both of said proximal and/or distal portions of the elongated member.

The object to be retained may be any suitable object capable of being retained within such a sled. In certain instances, the object is a device, such as an electronic device. Suitable electronic devices may include one or more of a mobile computing device, such as a personal computer, a

notebook computer, a tablet computer, an electronic reader, a mobile telephone, a personal digital assistant, and other such electronic devices and/or a combination of the same. In certain instances, the object is a housing configured to house a device, such as an electronic device.

It is understood that the sled herein disclosed may be configured for retaining an electronic device itself, or a housing within which an electronic device is to be housed, such as a ruggedized housing. For the purpose of enhancing clarity and for ease of reference only, the following disclosure will be described with reference to the sled being configured for retaining a housing, which housing is adapted for housing the electronic device. It is nevertheless to be understood that the sled may just as easily be adapted for interfacing directly with the electronic device itself rather than through the medium of a housing for said electronic device.

Accordingly, in various embodiments, one or more of the aforementioned electronic devices may be provided in conjunction with a housing, such as a waterproof and/or shockproof housing, such as that described in U.S. Patent Publication No. 2012/0118773, the contents of which are incorporated by reference herein for all purposes. In such embodiments, the sled may be configured for interfacing with and retaining the housing, which housing houses the electronic device. Such a housing, therefore, may be configured such that the electronic device may be fitted within the housing, so as to be protected thereby, and the sled may be configured for receiving and retaining the housing therein.

In certain instances, therefore, the sled may include one or more support elements, such as along a perimeter portion of the sled, wherein the support members are configured for supporting and/or retaining the housing and/or electronic device within the sled. One or more support elements may be provided such as along one or more perimeter edges and/or corners. For instance, in certain embodiments, two supporting elements may be provided, such as at the corners of the distal portion of the elongated member, and/or two supporting elements may be provided, such as at the corners of a proximal portion of the elongated member. In another instance, one or more sides or edges of the sled may include suitable supporting elements.

The support element may have any suitable configuration so long as it is capable of interacting with a housing and/or electronic device and supporting and/or retaining the housing within the sled. For instance, in certain instances, the supporting element may be configured as a pocket and/or a dead stop. For example, in certain instances, a plurality of support members may be provided, such as at the proximal and/or distal corners of the sled, wherein some of the support members are configured as a pocket, such as at the distal corners, and some of the support members are configured as hard stops, such as at the proximal corners. Additional or alternative support members may also be provided, such as along one or more of the side edges of the sled.

In certain embodiments, the sled is configured for receiving a utility attachment. For instance, the sled may be adapted for being coupled to a utility member such as a belt clip member, a bike clip member, an armband member, a universal mounting member, a car mounting system, a windshield mounting system, an external or internal battery charging system, a solar panel system, an external speaker system, and the like. For example, a portion of the sled may be configured for being removably or non-removably coupled to one or more utility members the coupling of which converts the sled into one or more accessories for use with an electronic device, more specifically for use in transporting and/or using an electronic device during transportation. In certain embodiments, the one or more accessory attachments may be interchangeable with the sled making the sled and attachments an interchangeable system, in other embodiments, once an attachment is coupled to the sled it is coupled in a non-removable fashion. The disclosure provides an apparatus for covering at least part of a mobile computing device having a touch screen display. The mobile computing device can also have an electrical connection in a housing that houses the mobile computing device. The apparatus includes a liquid resistant encasement that prevents damage to the mobile computing device from a liquid when the mobile computing device is encased in the liquid resistant encasement and when the liquid resistant encasement is in a sealed configuration with the mobile computing device, the liquid resistant encasement further enabling operation of the touch screen display when the mobile computing device is encased therein, the encasement having an outer surface and an inner surface and an aperture passing therethrough proximate the electrical connection; a charging mechanism adapted to sealably occupy the aperture in the encasement, the charging mechanism having a charge carrier proximate the interior surface of the encasement, the charging mechanism further having an electrical connection adapter having a first electrical interface for interfacing with the electrical connection of the mobile computing device when the encasement covers the at least part of the mobile computing device that includes the electrical connection, and the electrical connection adapter further having a second electrical interface electrically coupled with the charge carrier for transferring electrical charge from the charge carrier to the first electrical interface.

The disclosure also provides an apparatus for covering and charging a mobile computing device having a housing that comprises a touch screen display. The mobile computing device can also include one or more liquid permeable features. The one or more liquid permeable features can include an electrical connection for charging the mobile computing device. The apparatus includes an encasement that enables operation of the touch screen display of the housing of the mobile computing device, the encasement to cover at least part of the mobile computing device that includes the electrical connection, the encasement having one or more sealing members for providing a liquid resistant seal to the one or more liquid permeable features of the mobile computing device, the encasement having an outer surface and an interior surface; and a charging mechanism having a charge carrier proximate the interior surface of the encasement, the charging mechanism further having an electrical connection adapter having a first electrical interface for interfacing with the electrical connection of the mobile computing device when the encasement covers the at least part of the mobile computing device that includes the electrical connection, and the electrical connection adapter further having a second electrical interface electrically coupled with the charge carrier for transferring electrical charge from the charge carrier to the first electrical interface.

In one embodiment, the charge carrier is an induction plate. In another embodiment, the charge carrier is a battery.

The disclosure also provides an apparatus for covering at least part of a mobile computing device having a touch screen display including an electrical connection in a housing that houses the mobile computing device. In one embodiment, the apparatus includes an encasement that covers at least a part of the mobile computing device. In certain embodiments, the encasement includes at least one aperture in the encasement proximate the electrical connection, the at least one aperture having a gasket seat. The apparatus can also include an electrical connection adapter having a body for enclosing the at

least one aperture in the encasement, the electrical connection adapter having a first electrical interface connected with the body, the first electrical interface for interfacing with the electrical connection of the mobile computing device when the body encloses the at least one aperture in the encasement, the electrical connection adapter further having a second electrical interface connected with the body, the second electrical interface for transferring electrical power and/or data signals to and from the first electrical interface, the second electrical interface including a plurality of sealed, electrically-conductive members; and a gasket for being seated on the gasket seat to seal an interface between the at least one aperture in the encasement and the body of the electrical connection adapter.

In certain embodiments, the apparatus includes an encasement that covers at least part of the mobile computing device that includes the electrical connection, the encasement having a bottom member to cover at least a first portion of the mobile computing device, and a top member to cover at least a second portion of the mobile computing device, the top member configured to allow touch access to the touch screen display; and a coupling mechanism to couple the top member with the bottom member to cover the first and second portions of the mobile computing device, and to seal the top member with the bottom member.

In certain embodiments, the apparatus also includes a second coupling mechanism to couple the electrical connection adapter to the encasement when the body encloses the at least one aperture in the encasement.

The disclosure also provides an apparatus for covering at least part of a mobile computing device having a touch screen display. The mobile computing device also includes an electrical connection in a housing that houses the mobile computing device. In certain embodiments, the apparatus includes an encasement that enables operation of the touch screen display and covers at least part of the mobile computing device that includes the electrical connection, the encasement having a frame; and an electrical connection adapter disposed within a surface of the frame proximate the electrical connection, the electrical connection adapter having a first electrical interface connected with the frame, the first electrical interface for interfacing with the electrical connection of the mobile computing device when the mobile computing device is covered by the encasement, the electrical connection adapter further having a second electrical interface connected with the frame, the second electrical interface for transferring electrical power and/or data signals to and from the first electrical interface, the second electrical interface including a plurality of sealed, electrically-conductive members.

In certain embodiments, an electrical connection adapter can be embedded, attached to, integrated with, interior to or exterior to a surface of the frame proximate the electrical connection.

The disclosure also provides an apparatus for covering at least part of a mobile computing device having a touch screen display. The mobile computing device further having an electrical connection in a housing that houses the mobile computing device. In certain embodiments, the apparatus includes an encasement that enables operation of the touch screen display and covers at least part of the mobile computing device that includes the electrical connection, the encasement having an outer surface and an inner surface; an aperture passing through the inner surface and the outer surface of the encasement proximate the electrical connection; an electrical connection adapter having a body for enclosing the at least one aperture in the encasement, the electrical connection adapter having a first electrical interface connected with the body, the first electrical interface for interfacing with the electrical connection of the mobile computing device when the body encloses the at least one aperture in the encasement, the electrical connection adapter further having a second electrical interface connected with the body, the second electrical interface for transferring electrical power and/or data signals to and from the first electrical interface, the second electrical interface including a plurality of sealed, electrically-conductive members; and a gasket for being seated on the gasket seat to seal an interface between the at least one aperture in the encasement and the electrical connection adapter.

In certain embodiments, the encasement has a bottom member that covers at least a first portion of the mobile computing device, and a top member that covers at least a second portion of the mobile computing device. The top member can be configured to allow touch access to the touch screen display.

The disclosure also provides an apparatus for covering at least part of a mobile computing device having a touch screen display. The mobile computing device can also include an electrical connection in a housing that houses the mobile computing device. In certain embodiments, the apparatus includes a liquid resistant encasement that prevents damage to the mobile computing device from a liquid when the mobile computing device is encased in the liquid resistant encasement and when the liquid resistant encasement is in a sealed configuration with the mobile computing device, the liquid resistant encasement further enabling operation of the touch screen display when the mobile computing device is encased therein, the encasement having an outer surface and an inner surface and an aperture passing therethrough proximate the electrical connection; an electrical connection adapter having a body for sealing the at least one aperture against liquid intrusion into the liquid resistant encasement, the electrical connection adapter having a first electrical interface connected with the body, the first electrical interface for interfacing with the electrical connection of the mobile computing device when the body encloses the at least one aperture in the liquid resistant encasement, the electrical connection adapter further having a second electrical interface connected with the body, the second electrical interface for transferring electrical power and/or data signals to and from the first electrical interface, the second electrical interface including a plurality of sealed, electrically-conductive members.

The disclosure also provides a system for covering and charging a mobile computing device having a housing that comprises a touch screen display. The mobile computing device also including one or more liquid permeable features. The one or more liquid permeable features can also include an electrical connection for charging the mobile computing device. In certain embodiments, the system includes an encasement that enables operation of the touch screen display of the housing of the mobile computing device. In certain embodiments, the encasement covers at least part of the mobile computing device that includes the electrical connection. The encasement can include one or more sealing members for providing a liquid resistant seal to the one or more liquid permeable features of the mobile computing device, the encasement having an outer surface and an interior surface; a first induction plate proximate the interior surface of the encasement; and an electrical connection adapter having a first electrical interface for interfacing with the electrical connection of the mobile computing device when the encasement covers the at least part of the mobile computing device that includes the electrical connection, the electrical connection adapter further having a second electrical interface electrically coupled with the first induction plate for transferring

electrical charge from the first induction plate to the first electrical interface. The encasement can also include a base unit having a second inductive plate for inducing a transfer of inductive charge to the first inductive plate of the encasement, which transfers the charge to the electrical connection adapter and to the electrical connection of the mobile computing device.

In certain embodiments, the base unit includes one or more alignment members that provide alignment for the encasement when the encasement is mated with the base unit, and to align the first induction plate with the second induction plate. In other embodiments, the liquid is water.

The disclosure also provides an apparatus for covering and charging a mobile computing device having a housing that comprises a touch screen display. The mobile computing device can also include one or more liquid permeable features. The one or more liquid permeable features can include an electrical connection for charging the mobile computing device. The apparatus can include an encasement that enables operation of the touch screen display of the housing of the mobile computing device, the encasement to cover at least part of the mobile computing device that includes the electrical connection. Optionally, the encasement having one or more sealing members for providing a liquid resistant seal to the one or more liquid permeable features of the mobile computing device. The encasement can also include an outer surface and an interior surface; a charging mechanism having an induction plate proximate the interior surface of the encasement, the charging mechanism further having an electrical connection adapter having a first electrical interface for interfacing with the electrical connection of the mobile computing device when the encasement covers the at least part of the mobile computing device that includes the electrical connection, and the electrical connection adapter further having a second electrical interface electrically coupled with the first induction plate for transferring electrical charge from the induction plate to the first electrical interface.

In certain embodiments, the encasement is a liquid resistant encasement that prevents damage to the mobile computing device from a liquid when the mobile computing device is encased in the liquid resistant encasement and when the liquid resistant encasement is in a sealed configuration with the mobile computing device, the liquid resistant encasement further enabling operation of the touch screen display when the mobile computing device is encased therein, the encasement having an outer surface and an inner surface and an aperture passing therethrough proximate the electrical connection.

BRIEF DESCRIPTION OF THE FIGURES

FIGS. **1**A-**1**C are directed to a sled of the disclosure, wherein the sled is configured for retaining an electronic device and/or a housing therefor. FIGS. **1**D-**1**I are directed to an alternative embodiment of the sled of the disclosure, wherein the sled is configured for retaining an electronic device and/or a housing therefor.

FIGS. **2**A-**2**G are directed to implementations of a clasping and/or locking mechanism for use in conjunction with the sled of the disclosure. FIGS. **2**H-**2**M are directed to alternative embodiments of a clasping and/or locking mechanism for use in conjunction with the sled of the disclosure.

FIGS. **3**A and **3**B provide various perspective views of a distal portion of the sled.

FIGS. **4**A-**4**H provide various implementations of a mechanism for coupling the sled with a number of utility attachments, and FIGS. **4**I-**4**N provide an alternative embodiment of a sled for implementing coupling to utility attachments.

FIGS. **5**A-**5**F are directed to a suitable belt-clip accessory that may be coupled to the sled of the disclosure. FIGS. **5**G-**5**J are directed to an alternative embodiment of a sled of the disclosure coupled to an alternative embodiment of a belt clip accessory.

FIGS. **6**A-**6**I are directed to implementations of a bike mount adapter and assembly that may be coupled to a sled of the disclosure. FIGS. **6**J-**6**T are directed to implementations of a bike-mounted ball assembly for coupling to a sled of the invention having a bike mount assembly attached to or integrated therewith. FIGS. **6**U-**6**X are directed to an alternative embodiment of a sled and locking mechanism implemented with a bike mount and adapter.

FIGS. **7**A-**7**T are directed to implementations of an armband assembly that may be coupled to a sled of the disclosure.

FIGS. **8**A-**8**E are directed to implementations of a float adapter that may be coupled to sleds and cases of the disclosure.

FIGS. **9**A-**9**G are directed to implementations of a mount adapter that may be coupled to a sled of the disclosure.

FIGS. **10**A-**10**G are directed to implementations of a mounting system for a sled of the disclosure.

FIGS. **11**A-**11**H are directed to other implementations of a mounting system for a sled of the disclosure.

FIGS. **12**A-**12**C are directed to other implementations of a mounting system for a sled of the disclosure.

FIGS. **13**A-**13**B are directed to other implementations of a mounting system for a sled of the disclosure.

FIGS. **14**A-**14**D are directed to other implementations of a mounting system for a sled of the disclosure.

FIGS. **15**A-**15**D are directed to other implementations of a mounting system for a sled of the disclosure.

FIGS. **16**A-**16**F are directed to implementations of an electrical device charging system for charging the electrical device as it is enclosed.

FIGS. **17**A-**17**H are directed to other implementations of an electrical device charging system for charging the electrical device as it is enclosed.

FIGS. **18**A-**18**D are directed to other implementations of an electrical device charging system for charging the electrical device as it is enclosed.

FIGS. **19**A-**19**F are directed to other implementations of an electrical device charging system for charging the electrical device as it is enclosed.

FIGS. **20**A-**20**B are directed to other implementations of an electrical device charging system for charging the electrical device as it is enclosed.

FIGS. **21**A-**21**G are directed to other implementations of an electrical device charging system for charging the electrical device as it is enclosed.

FIGS. **22**A-**22**M are directed to other implementations of an electrical device charging system for charging the electrical device as it is enclosed.

FIGS. **23**A-**23**H are directed to other implementations of an electrical device charging system for charging the electrical device as it is enclosed, and in particular using a 30-pin connector or the like, having an O-ring to seal a charge port of the housing that encloses a charging electrical device.

FIGS. **24**A-**24**C are directed to implementations of an electronic device charging system including a battery associated with a case that provides additional energy storage capacity for an electronic device. FIG. **24**D is directed to a representative embodiment that includes a flash unit integrated into a case.

FIGS. **25**A-B are directed to imaging systems that include a case for an electronic device having a camera and a lens that can be manually attached and detached from the case

FIGS. **26**A-C are directed to embodiments of cases and water sealed connectors that, when connected, result in a water tight seal that inhibits entry of water or other liquids.

FIG. **27** is directed to an implementation of a waterproof microphone and controller.

DETAILED DESCRIPTION OF THE DISCLOSURE

The present disclosure is directed to an apparatus and system for more easily transporting a housing of an object, such as a device and/or the components thereof, as well as methods for using the same, in a manner that offers both protection for the device from adverse environmental conditions, inclement weather, mishandling and/or damage, such as from contacting a fluid, such as water, at the same time as increasing its usability while being transported. The present disclosure is also directed to systems and methods for charging an electronic device within a housing, preferably as the electronic device is fully enclosed within the housing, for example, induction or electrical adapters.

In one aspect, the present disclosure is directed to a device or a system of devices for one or more of protecting, retaining, and/or transporting an object, such as a device, for instance, an electronic device. In one embodiment, such as provided with respect to FIG. **1**A, in its most basic form, a device **1** of the disclosure may be configured as a sled **1**. The sled **1** may be adapted for retaining an object such as a device. The sled may be adapted for retaining a device, such as an electronic device, either directly and/or may be adapted for retaining an electronic device that has been housed within a housing such as a ruggedized housing. The retaining sled **1** itself may then be adapted in various manners so as to be easily transported in one or more of a multiplicity of ways.

Although, in one instance, a sled for retaining an electronic device is provided, in various instances, the sled is adapted for retaining a housing, which housing is adapted for housing the electronic device. Accordingly, for the purpose of clarity only, the description provided herein below is directed to a sled **1** that is configured for retaining a housing **100** which housing is adapted for housing an electronic device **110**. However, it is understood that such description applies equally well to the sled **1** being adapted for retaining the electronic device **110** directly without the electronic device **110** first being fit within a housing **100**.

Accordingly, in various embodiments, an object, such as an electronic device, to be retained within a sled of the disclosure may be provided in conjunction with a housing, such as a waterproof and/or shockproof housing. In such embodiments, the sled may be configured for interfacing with and retaining the housing, which housing houses the electronic device. Such a housing, therefore, may be configured such that the electronic device may be fitted within the housing, so as to be protected thereby, and the sled may be configured for receiving and retaining the housing therein.

As the object to be retained, e.g., electronic device, may differ in its configuration, e.g., form factor and/or function, so to the configuration of the sled may differ so as to accommodate the different form factors and/or functions of the electronic device and/or housings for such electronic devices that are meant to be retained within the sled. A suitable electronic device for retention within the sled may be, for example, one or more of a mobile computing device, such as a personal computer, a notebook computer, a tablet computer, an electronic reader, a mobile telephone, a personal digital assistant, and other such electronic devices and/or a combination of the same. In certain instances, the object is a housing configured to house a device, such as an electronic device.

As can be seen with respect to FIG. **1**A, the sled **1** includes an elongated member **10** having a front surface **10***a* and a back surface **10***b*. The elongated member **10** is circumscribed by a perimeter portion **12**, which perimeter portion includes a proximal portion **12***c* and a distal portion **12***d* as well as first and second sides **12***a* and **12***b*, respectively.

The elongated member **10** is configured for interfacing with a surface of an electronic device or a housing that is capable of housing the electronic device. For instance, a front surface **10***a* of the sled **1** is configured for interfacing with a front or back surface of an electronic device **100** or a housing **110** therefore and/or for supporting the same. For example, one or both of the elongated member **10** or the perimeter portion **12** are configured for supporting the electronic device **100** or housing **110** while in the sled **1**.

Accordingly, in certain instances, therefore, the sled **1** may include one or more support elements, such as **16** or **30**, for instance, positioned along a perimeter portion **12** of the sled **1**. The support members may have any suitable configuration so long as they are capable of supporting and/or retaining the housing **110** and/or electronic device **100** within the sled **1**. One or more support elements may be provided such as along one or more perimeter edges and/or corners. For instance, as depicted, two supporting elements **16***a* and **16***b* may be provided, such as at the corners of the proximal portion **12***c* of the elongated member **10**, and/or two supporting elements **30***a* and **30***b* may be provided, such as at the corners of a distal portion **12***d* of the elongated member **10**. In other instances, one or more sides or edges, e.g., **12***a* or **12***b*, of the sled **1** may include suitable supporting or attachment elements.

The support element may have any suitable configuration so long as it is capable of interacting with a housing **110** and/or electronic device **100** and supporting and/or retaining the same within the sled **1**. For instance, in certain embodiments, a suitable supporting element may be configured as a dead stop, such as **16***a* and **16***b*, and/or in other instances, suitable supporting elements, such as **30***a* and **30***b*, may be configured as a pocket. For example, in certain instances, a plurality of sets of support members may be provided, such as at the proximal **12***c* and/or distal **12***d* corners of the sled **1**, wherein some of the support members are configured as hard stops, **16***a* and **16***b*, such as at the proximal **12***c* corners, and some of the support members are configured as pockets, **30***a* and **30***b*, such as at the distal **12***d* corners the support members, or vice versa. Additional or alternative support members may also be provided, such as along one or more of the side edges **12***a* and/or **12***b* of the sled **1**.

The sled **1** may further include at least one clasping mechanism **14** that is configured for retaining and/or releasing an electronic device, and/or a case therefore, within the sled **1**. Any suitable clasping mechanism may be employed so long as such clasping mechanism is capable of interfacing with a portion of the electronic device, and/or a housing therefore, as well as the sled in such a manner that by said interaction the electronic device and/or housing is retained within the sled **1**. The clasping mechanism may be positioned anywhere along the sled, and in some instances, is positioned along the perimeter portion, such as at the proximal portion **12***c* and/or the distal portion **12***d* of the elongated member **10**. In other instances, the clasping mechanism may be positioned along one or more sides **12***a* and/or **12***b* of the elongated member **1**.

Hence, in certain embodiments, as can be seen with respect to FIGS. **1**B and **1**C a portion of the sled **1**, such as the

proximal portion **12***c*, may be configured for being coupled with a clasping mechanism, which clasping mechanism functions to engage a device, such as an electronic device or a housing therefore, and thereby to retain the device within the sled **1**. As depicted the proximal portion **12***c* of the sled **1** is adapted so as to be functionally associated with a clasping mechanism **14**, which clasping mechanism **14** is configured for being coupled to a device to be retained within the sled and is therefore configured for moving from a first clasped position to a second unclasped or released position or vice versa.

For instance, as shown in FIG. **1**B, the front side **10***a* of the proximal portion **12***c* of the elongated member **10** of the sled **1** of FIG. **1**A is illustrated. The front surface **10***a* of the sled **1** includes a cavity into which the clasping mechanism **14** is fitted. This cavity is useful in that it allows for a smooth, flat interface between the top surface **10***a* of the elongated member **10** and the contacting surface of the electronic device and/or housing to be retained by the sled **1** despite the presence of the clasping mechanism **14** within the cavity.

Additionally, FIG. **1**B provides a view of the back side **10***b* of the proximal portion **12***c* of the elongated member **10** of the sled **1** of FIG. **1**B. The back surface **10***b* of the sled **1** includes an extended portion that forms the boundaries of the cavity into which the clasping mechanism **14** is fitted. This extended portion is useful in that it allows for the smooth, flat interface between the top surface of the sled and the contacting surface of the device to be retained by the sled **1**, e.g., despite the presence of the clasping mechanism and/or the locking member within the cavity.

Accordingly, in this instance, the proximal portion **12***c* includes a cavity configured for receiving one or more of the elements that together form the clasping mechanism **14**. The clasping mechanism **14** is configured for being fit within the cavity and therein is adapted for being capable of movingly engaging a device so as to retain the device within or to release and/or eject the device from the sled. In this configuration, to effectuate these purposes, the clasping mechanism **14** is configured for rotating from a first position to a second position, whereby a device to be retained may be engaged within and/or released from the sled. In certain instances, it may be useful to lock the clasping mechanism in a released or a retained position. Therefore, the cavity of the proximal portion of the sled and/or the clasping mechanism may further be configured for being coupled to a locking element as well.

Accordingly, the cavity of the proximal portion **12***c* of the sled **1** may be configured for interfacing with a locking element **15**, which locking element **15** is adapted for interacting with the clasping mechanism **14** within the cavity so as to lock the clasping mechanism **14** in the clasped or released position. For instance, the cavity may include an opening **14***a* into which the locking element **15** may be fitted so as to engage one or more portions of the clasping mechanism **14** thereby effectuating the locking or the releasing of the clasping mechanism **12**. For example, the locking element **15** is configured for being fit through the opening **14***a* of the proximal portion **12***c* of the sled **1** and into a portion of the cavity wherein it couples to one or both of the sled **1** and the clasping mechanism **14**. Within the cavity, the locking element **15** is capable of moving proximally and distally such as from an unlocked to a locked position.

More specifically, as depicted in FIG. **1**B, for effectuating the interaction, e.g., locking, of the locking element **15** with the clasping mechanism **14**, the clasping mechanism cavity may include one or more, e.g., a plurality, of locking member stops **14***b* and/or **14***c* that are positioned on opposite sides of the opening **14***a* and configured for engaging the locking element **15**. For instance, a portion of the locking element **15** impinges through the opening **14***a* and into the cavity. In the cavity the locking element **15** is capable of moving, e.g., laterally, so as to engage one or both of the clasping member **14** and/or the locking member stops **14***b* and/or **14***c* within the cavity of the sled **1** in a manner sufficient to lock the clasping mechanism **14** in a locked position.

For instance, as can be seen with respect to FIG. **1**C, the cavity includes an opening **14***a* through which a portion of the locking member **15** is fitted so as to interface with a corresponding portion of the clasping member **14**. Also depicted are the locking member stops **14***b* and **14***c*, which stops function to stop the movement of the locking member **15** within the cavity once in a locked position. The cavity is further bounded by a plurality of opposing stop posts, which stop posts function to further effectuate the locking of the clasping mechanism **14** such as by engaging a locking portion of the locking member **15** and preventing movement of the locking member **15** in a manner that is normal to the plane of the cavity. For example, as the locking member **15** moves within the cavity into a locked position it contacts the locking member stops **14***b* and **14***c* which stops act to prevent the further movement of the locking member **15**. The locking member stops **14***a* and **14***b* and a corresponding feature of the clasping mechanism **14** are adapted for interfacing with a corresponding surface on the locking member **15** as the locking member **15** moves distally from an unlocked to a locked position, thereby locking the clasping mechanism into a fixed, e.g., retained position.

Also depicted are support members, e.g., dead stops, **16***a* and **16***b* positioned at the corners of the perimeter portion of the elongated member **10** as well as a camera aperture **18**, which camera aperture is positioned so as to be aligned with a corresponding camera portion of a retained electronic device or housing therefore.

As described above, a clasping mechanism for use in conjunction with the elongated member and/or support members of the sled for retaining an electronic device and/or housing therefore may have any suitable configuration so long as it is capable of functioning to retain the device within the sled. The clasping mechanism may be integral to the sled or it may be a separate element meant to be coupled to the sled, such as by clipping thereto. For instance, a suitable clasping mechanism may be an external clip, clamp, band or fastener, such as a hook and loop fastener, or adhesive, a combination of the same and the like that is a separate unit from but added to the sled.

An alternative embodiment of sled **1** is depicted in FIGS. **1**D-**1**I. FIG. **1**DH depicts a front view of an alternative embodiment of sled **1**, including extended portion **10**, a proximal portion **12** *c*, distal portion **12***d*, front surface **10***a*, pockets **16***a* and **16***b*, supporting elements **30***a* and **30***b*, clasping mechanism **14**, camera aperture **18**, and cutout portions **32***a* and **32***b* positioned on the front surface near the supporting elements **30***a* and **30***b*, which cutout portions function for transmitting sound to and/or away from a retained device. The pockets **16***a* or **16***b* are present in some embodiments to help secure the housing to the sled **1**. Likewise, the supporting elements **30***a* and **30***b* can be present in certain embodiments. These supporting elements **30***a* and **30***b* allow access to the speakers of the electronic device while allowing the housing encasing the electronic device to be secured to the sled **1**. Also, the cutout portions **32***a* and **32***b* are present in certain embodiments to improve sound transmission from the encased portable electronic device through the housing and the sled **1**.

In certain embodiments, clasp retaining elements **14***o* and **14***p* shown in FIG. **1**D, can be used to mate with an alternative embodiment of a clasping element described infra and shown in FIGS. **2**H-**2**J. FIG. **1**E shows a front view of the proximal portion **12***c* of the alternative embodiment of sled **1** in FIG. **1**D, including the clasping mechanism **14**, pockets **16***a* and **16***b*, and camera aperture **18**. The camera aperture **18** can be any shape as long as it allows a camera on an electronic device encased in a housing secured to the sled, access to take pictures or video. The camera aperture can be an oval as show in FIG. **1**D, but it can also be a circle, square, rectangle, parallelogram, trapezoid or 5, 6, 7, 8, 9, 10, 11, 12, 13, 14, 15, 16, 17, 18, 19, or more sided aperture.

FIG. **1**F shows a rear view of the proximal portion **12***c* of the alternative embodiment of sled **1** in FIG. **1**D, including the rear surface **10***b*, **14***q* that allows for attachment of a clasping element (clasping element described infra and shown in FIGS. **2**H-**2**J), and camera aperture **18**. FIG. **1**G shows a front view of the distal portion **12***d* of the alternative embodiment of sled **1** in FIG. **1**D, including front surface **10***a*, supporting elements **30***a* and **30***b*, and cutout portions **32***a* and **32***b*. The supporting elements **30***a* and **30***b* can be any shape as long as they hold the housing for an electronic device securely to the sled while allowing access to the sound apertures in the housing so that sound can be transmitted through the housing and allow for access to the door at the proximal end of the housing for accessing the power and data ports of the portable electronic device.

FIG. **1**H shows a rear view of the rear surface **10***b* of the distal portion **12***d*, including cutout portions **32***a* and **32***b*. FIG. **1**I shows a side view of an alternative embodiment of sled **1** (as shown in FIG. **1**D), including pocket **16***b*, supporting element **30***b*, supporting element cutout **30***d*, and clasp retaining element **14***o*. The elongated element **10** is curved slightly, such that when a case containing an electronic device is inserted into the sled, the elongated element curves away from the body of the case. Element cut out **30***d* can be any shape that allows for transmission of sound through the housing secured in the sled. The curvature of the elongated member of the sled is configured to aid in the removal of a case from the sled. In addition, the curvature of the elongated member improves retention of a case coupled with the sled, as the force retaining the case in the sled is concentrated at the four corners of the sled, hard stops **16***a* and **16***b* (hard stop **16***b* not shown), and supporting elements **30***a* and **30***b* (supporting element **30***b* not shown). The curvature of the sled also improves shock resistance of the sled, as it allows the sled to flex if dropped or struck.

As depicted in FIGS. **2**A-**2**B, the clasping mechanism **14** is an internal clasping mechanism that is configured for being integral with the sled **1**. The clasping mechanism **14** is configured so as to include a locking and/or ejection portion **14***e* as well as a retaining portion **14***d*, which portions are joined together at a junction portion **14***g* so as to form an "L" shape. For instance, the locking and/or ejection portion forms the base of the "L" shape and is adapted so as to be fit within the cavity of the sled **1**. The retaining portion **14***d* forms the extended portion of the "L" shape, which portion extends away from the plane of the surface **10***a* of the elongated member **10**. The retaining portion **14***d* ends in a retaining element or catch **14***f*, which retaining catch is configured for contacting a top surface of the electronic device or housing therefore and retaining the same within the bounds of the sled **1**.

The clasping mechanism **14** is configured for moving from a first, e.g., retained, position to a second, release, position such as by rotating with respect to the plane of the top surface **10***a* of the elongated member **10***a*. For example, the junction **14***g* where the retaining portion **14***d* meets the ejection portion **14***e* may include an axle orifice through which an axle, such as a pin, may be fit. Such axle may function not only to join the clasping mechanism **14** to the sled **1**, but may also function as a pivot point about which the clasping mechanism **14** rotates.

Specifically, in the retained position, the catch **14***f* of the clasping mechanism **14** is engaged with a top surface of a retained device, e.g., electronic device, housing device, or other object, and functions to retain the device, within the sled **1**. When ejection of the device from the sled **1** is desired, a releasing pressure is applied to the catch **14***f* so as to disengage the catch **14***f* from the top surface of the device. Such force causes the retaining portion **14***d* to rotate backwards, which rotation further causes the ejection portion **14***e* to rotate upwards out of the cavity away from the plane of the top surface **10***a* of the elongated member **10** and against the bottom surface of the retained device thereby assisting in the effectuation of the ejection of the device.

In certain instances, it may be desired that the clasping mechanism **14** be locked so as to prevent its rotation and thereby prevent the ejection of the retained device from the sled **1**. Accordingly, as described above, the proximal portion **12***c* of the sled and/or the clasping mechanism **14** may be configured for interacting with the locking element **15** so as to be locked into place, e.g., within the cavity of the sled **1**. The locking element may have any suitable configuration so long as it is capable of interacting with one or both of the sled and the clasping mechanism so as to lock the clasping mechanism in an engaged and/or released position.

Consequently, the proximal portion **12***c* of the sled **1** may have an opening **14***a* and the locking and ejection portion **14***e* of the clasping mechanism **14** may include a corresponding locking aperture **14***h* through which a portion of a locking element **15** may be fitted. Additionally, to effectuate the locking of the clasping mechanism **12**, such as in an engaged position, the cavity of the sled **1** may include one or both locking element stops **14***b* and **14***c* as well as one or more opposing stop posts, which stops function to further effectuate the locking of the clasping mechanism **14** such as by engaging corresponding portions of the locking element **15** and/or clasping mechanism **14**.

For instance, the clasping mechanism **14** may include a locking engagement element **14***i*, which engagement element **14***i* is adapted for engaging a portion of the locking element **15** in such a manner that when engaged the locking element **15** prevents the clasping mechanism **14** from rotating thereby preventing the disengagement of the catch **14***d* from the retained device, e.g., from a top surface of the retained device, and the ejection of the same. Further, one or both of the locking element stops and/or stop posts are configured for engaging a portion of the locking element **15** to additionally ensure the locking of the clasping mechanism.

FIGS. **2**C and **2**D depict a locking element of the disclosure. As described above, the sled **1** of the disclosure, e.g., a proximal portion thereof, may be configured so as to include a locking element **15**. For instance, the sled **1** includes a proximal portion **12***c* having a front surface **10***a*, in which a cavity for receiving a clasping mechanism **14** is positioned, and having a back surface **10***b*, in which an extended structure adapted to receive a locking mechanism **15** is positioned. The cavity includes an opening through which a portion of the locking element **15** may be fitted. Consequently, the locking element **15** includes a portion that is configured for being inserted through the opening in the cavity and additionally through the locking aperture **14***a* so as to couple to a portion

of the clasping mechanism **14** and thereby being able to lock and/or release the clasping mechanism **14**.

Accordingly, as can be seen with respect to FIGS. **2**C and **2**D, to effectuate the locking of the clasping mechanism, the locking element **15** includes a top portion **15***a*, in this instance, having a gripping feature, and a bottom portion **15***b*, in this instance, having an extended engagement portion **15***d*, which extended engagement portion **15***d* includes a locking groove **15***c*. The extended engagement portion **15***d* is configured for being inserted through the opening **14***a* of the sled **1**, and further configured for extending through the locking aperture **14***h* of the clasping mechanism **14**.

The extended engagement portion **15***d* further includes a locking groove **15***c*, which groove is configured for being coupled with one or more of: the locking member stops **14***b* and **14***c*, which function to stop the movement of the locking member **15** within the cavity once in a locked position; stop posts, which function to effectuate the locking of the clasping mechanism by engaging the locking groove **15***c* of locking member **15**; and the locking engagement element **14***i* of the clasping mechanism **14**, which locking engagement element **14***i* functions for engaging the locking groove **15***c* of the locking element **15**, thereby locking the clasping mechanism in a fixed position.

For example, as can be seen with respect to FIGS. **2**E to **2**G, the locking element **15** is configured for being coupled to the clasping mechanism **12**, e.g., by being fit through the opening **14***a* of the cavity. Specifically, the extended engagement portion **15***d* of the locking element **15** is configured for being inserted through the opening **14***a* of the sled **1**, and further configured for extending through the locking aperture **14***h* of the clasping mechanism **14**. The extended engagement portion **15***d* further includes a locking groove **15***c* which groove is capable of being engaged with one or both of a corresponding locking post stop, within the cavity, and/or the locking engagement element **14***i* of the clasping mechanism **14**, which engagements function for locking the clasping mechanism in a fixed position, e.g., by the distal translation of the locking element **15**, within the back surface **10***b* boundaries of the channel.

FIG. **2**E depicts the clasping mechanism **14** and the locking element **15** prior to being coupled together (without the intervention of the sled **1**). FIG. **2**F depicts the clasping mechanism **14** and the locking element **15** in the process of being coupled together. FIG. **2**G depicts the clasping mechanism **14** and the locking element **15** after having been coupled together. Additionally, FIG. **2**G depicts the clasping mechanism **14** and the locking element **15** after being coupled together in conjunction with the intervening sled **1**.

For instance, FIG. **1**B provides a depiction of a top surface **10***a* of the proximal portion **12***c* of a sled **1** of the disclosure. The proximal portion **12***c* is configured to include a cavity into which a clasping mechanism **14** is inserted. A back surface **10***b* of the cavity includes an opening **14***a* through which an extended portion **15***d* of a locking element extends. The extended portion **15***d* not only extends through the opening **14***a* but further it extends through an opening **14***h* positioned in the locking and engaging portion **14***e* of the clasping mechanism **14**. In this position, the locking element **15** may be slid, e.g., downward from a released to a locked position.

For example, an electronic device and/or a housing therefore may be inserted into the sled **1**. In order to accomplish this, the engagement portion **14***e* of the clasping mechanism **14** may be moved freely upwards, e.g., rotated, away from the top surface **10***a* of the elongated member **10**, thereby allowing a space to be created into which the device may be fitted. The clasping mechanism **14** may additionally include a biasing member **14***j*, e.g., a spring, that biases the clasping mechanism **14** into an engaged position such that once the clasping mechanism **14** has been rotated backwards allowing a device to be inserted into the sled **1**, the biasing member **14***j* biases the clasping mechanism **14** such that it returns clasping mechanism back to its rest, e.g., engaged, position, whereby the inserted device is capable of being retained within the sled **1**. The biasing member **14***j* may be coupled to both the sled **1** and the clasping member **14** by any suitable mechanism, such as by a pin **14***k* that extends from one side of the cavity, through a retaining element aperture **14***l* in the clasping mechanism **14** and the biasing member **14***j*, to the other side of the cavity, where the pin **14***k* is further received within corresponding apertures within the bounds of the cavity.

It is to be noted that given the "L" shaped configuration of the clasping mechanism **14**, as the engagement portion **14** extends away from the sled **1**, such as in releasing a retained device, the ejection portion **14** also moves away from the cavity and top surface **10***a* of the elongated member **10** not only engaging a surface, e.g., back or front surface (depending on how the device is inserted into the sled, but also applying a force, e.g., an ejecting force, to the inserted device thereby in assisting in its ejection from the sled.

Further, in certain instances, it may be desirable to prevent such ejection, and therefore, in certain instances, the clasping mechanism **14** may be removably coupled to a locking element **15**, as described above, which locking element **15** is capable of moving from a released position, such as where the locking element **15** is not coupled to the clasping mechanism **14**, to a locked position, wherein the locking element **15** is engaged with and/or coupled to the clasping mechanism **14**, thereby locking the clasping mechanism **14** in place. The locking element **15**, for instance, may be configured such that as it moves into coupling alignment with the clasping mechanism **14**, the locking groove **15***e* slides over the locking engagement element **14***i* of the clasping mechanism **14** and may further contact the locking member stops, **14***b* and **14***c*, and/or the stop posts, thereby locking the clasping mechanism in a fixed position.

Accordingly, as can be seen with respect to FIG. **2** in various instances, the sled **1** may include a clasping mechanism **14**, such as at its proximal portion **12***c*, which clasping mechanism **14** may include one or both of a moveable retaining **14***d* and/or ejecting element **14***e* as well as a locking element **15**. The retaining portion **14***d* may include a retaining element **14***f* that includes a hook or catch interface, which catch interface is adapted for engaging a retaining surface, e.g., a top or bottom surface, of an electronic device or housing therefore, thereby retaining the electronic device within the sled.

The clasping mechanism **14** may additionally include an ejection portion **14***h*, which ejection portion may further include a switch receiving interface, e.g., an opening configured for receiving an extended portion of the locking mechanism **15** there through. Hence, the clasping mechanism **14** may include two legs **14***d* and **14***e* that are joined at a joint **14***g* so as to from an "L" shape, wherein one leg comprises the retaining portion and one leg comprises an ejection and/or lock receiving portion.

The retaining **14***d* and ejection **14***e* portions may therefore be coupled together by a joint **14***g*, which joint may include an axle aperture **14***k* that is configured for receiving a retaining element **14***i*, e.g., an axle or pin, there through, which axle **14***i* functions to couple the clasping mechanism **14** to the elongated member **10** of the sled **1**. The clasping mechanism **14**, therefore, is configured for rotating about the axle element **14***i*, e.g., with respect to the stationary elongated member **10**.

The rotation of the retaining and ejecting portions about the pin from a first position to a second position allows for the insertion of an electronic device into the sled. Additionally, the rotation back from the second position to the first position results in the engagement of the hook interface **14***f* of the retaining portion **14***d* with a retaining surface of the device and retention of the device within the sled **1**.

Once the device is engaged with the hook portion **14***f* and retained within the sled **1**, rotation of the retaining element **14***d* about the axle **14***g* results in the disengagement of the hook portion from the retaining surface of the device, and engagement of the ejecting portion with an ejection surface of the device, which continued rotation results in the ejection of the device form the sled **1** by the movement of the ejection element **14***e* away from the top surface **10***a* of the sled **1**. The clasping mechanism **14** may further include a biasing, e.g., a spring, element **14***h*, that is configured for biasing the rotating retaining portion in the first, e.g., engaged position. The biasing element **14***h* therefore may be functionally associated with both the axle **14***g* and the retaining portion **14***f* so as to bias the retaining portion in the engaged position.

Additionally, as indicated above, in certain instances it may be useful to lock the clasping mechanism in place and in such instances a locking mechanism may be included as part of the sled. Although the locking mechanism may have any suitable configuration, so long as it is capable of locking the device into the sled thereby preventing the removing of it there from, in certain instances, the locking mechanism is an element that functions to lock the clasping mechanism in the engaged position. Accordingly, in certain instances, the sled **1** includes a locking element that is configured for engaging the clasping mechanism, which locking element is configured for preventing the movement of the retaining and/or ejection element in place thereby locking the clasping mechanism in place, such as in the retained position.

In certain instances the locking element includes a sliding latch member. The sliding latch member includes an elongated member having a front and a back surface, wherein the front surface may include a gripping feature, and the back surface includes an extended portion, extending away from the back surface, and a latching element, such as a locking groove, or the like, which latching element is configured for interfacing with a portion of the clasping mechanism so as to lock the clasping mechanism in place. For instance, where the clasping mechanism includes a retaining portion and an ejection portion, e.g., coupled at a junction portion, the ejection portion may include a switch interface, such as an extended rail member configured to be fit within the locking groove, that when engaged with the latching element prevents the clasping mechanism from moving thereby locking the retained device within the sled.

As indicated above, the perimeter portion **12** of the sled **1** may include one or more support elements, which support elements may be adapted for supporting the electronic device, or housing therefore, within the sled. Accordingly, in certain embodiments, the perimeter portion **12** includes a plurality of support elements positioned on one or both of the proximal **12***c* and/or distal **12***d* portions of the elongated member **10**, such as at the corners of the elongated member **10**. For instance, as can be seen with respect to FIG. **2**, the sled **1** may include a plurality of support elements, such as support elements **16***a* and **16***b* positioned at the corner of the proximal portion **12***c*.

As described above, a support element, such as support elements **16***a* and **16***b*, may have any suitable configuration so long as it is capable of engaging a portion of the device to be retained and supporting the same within the sled. As depicted, support elements **16***a* and **16***b* are configured as dead stops, each of which dead stop engages a corner of the device, and thereby supports the device within the sled. The dead stop may engage the entire proximal or distal portion, an entire corner region, or substantial portions thereof, and likewise the support element may circumscribe the entire corner region or a substantial portion thereof. As depicted, the dead stops **16***a* and **16***b* engage a substantial portion of the corner regions of the proximal portion **12***c* so as to form an edge that curves around the corner portion of the sled **1** and thereby supports an end portion of the device to be retained.

In an alternative embodiment of a clasping mechanism, the locking element is inserted through the top of a clasping element and both the locking element and clasping element are mated to the sled. FIG. **2**H shows a perspective view of an alternative embodiment of a clasping element **14**. The clasping element **14** has two clasp alignment elements **14***l* and **14***m* that allow the clasping element to be attached to the proximal portion **12***c* between the clasp retaining elements **14***o* and **14***p* and over cutaway portion **14***q* (e.g. see FIGS. **1**E and **1**F). The clasping element **14** also has a locking aperture **14***h*, retaining portion **14***d*, and catch or retaining element **14***f*. FIG. **2**I shows a side view of clasping element **14**, with clasp alignment element **14***l*, retaining portion **14***d*, and catch or retaining element **14***f*. FIG. **2**J shows a bottom view of clasping element **14**, with clasp alignment elements **14***l* and **14***m*, locking aperture **14***h*, retaining portion **14***d*, and catch or retaining element **14***f*. FIG. **2**K shows a perspective view of a locking element **15** that attaches to the clasping element **14** (shown in FIGS. **2**H-**2**J) and the sled of FIG. **1**D. The locking element **15** includes a top portion **15***a*, an extended engagement portion **15***d*, and clasp alignment recesses **15***e* and **15***f* (not shown). The extended engagement portion **15***d* of locking element **15** is inserted through the locking aperture **14***h* of clasping element **14**, and the combination of the locking element **15** and clasping element **14** is fit over the proximal portion **12***c* of the sled **1**, such that clasp alignment elements **14***l* and **14***m* are in between clasp retaining elements **14***o* and **14***p* and over cutaway portion **14***q*.

In this assembled configuration, the retaining portion **14***d* extends perpendicular to the elongated element **10** such that a case inserted into the sled **1** is held in place by the retaining portion **14***d* and catch **14***f*. In certain embodiments, locking element **15** can be slid along the axis defined by the two clasp retaining elements by applying lateral pressure on the top portion **15***a* of locking element **15** and sliding the locking element back and forth. When the locking element **15** is slid in one direction, for example, to the right, towards clasp retaining element **14***p*, the locking element is unlocked from the sled and can be removed from the locking mechanism. When the locking element is slid in the other direction, for example, to the left, towards clasp retaining element **14***o*, the locking mechanism is locked in place and cannot be removed from the locking mechanism without sliding the locking element to the right. Clasping element **14** also has a locking indicator element **14***r*. When locking element **15** is attached to clasping element **14** and slid to the right, locking indicator element is visible and indicates to a user that the locking mechanism is not locked. The locking indicator element is preferably a different color from the locking element and clasping elements. For example, the locking indicator element may be red, orange, green, blue, white, black, purple or pink.

FIG. **2**L shows a front view of locking element **15**, including top portion **15***a*, extended engagement portion **15***d*. Top portion **15***a* includes handling grooves **15***g*, **15***h*, and **15***i* that allow a user to apply lateral force and slide locking element

back and forth. In some embodiments of locking element **15**, handling grooves **15***g-i* are replaced with one or more ridges that extend upwards beyond the top portion **15***a*. FIG. **2**M is a side view of locking element **15**, including top portion **15***a*, and extended engagement portion **15***d*.

FIGS. **3**A and **3**B provide another configuration of a support element of the disclosure. In this instance, the support element is configured as a plurality of pockets **30***a* and **30***b* positioned at the corners of the distal portion **12***d* of the elongated member **10**. As depicted, the support pockets **30***a* and **30***b* are configured as cups that engage the entire portion of the corner region of the distal portion **12***d* so as to form a pocket that curves around the corner portion of the sled **1** and thereby supports an end portion of the device to be retained. In this instance, there is a gap between the two support pockets **30***a* and **30***b*. This gap may be useful for allowing access to a portion of a retained device, such as a port portion of the retained device.

The gap can be of any suitable size and/or dimension, such as of a size and dimension so as to allow a port of a retained device to be accessed, such as a charge port, which charge port may be accessed directly or through a charge port door positioned in a housing in which an electronic device is contained. Accordingly, in certain instances, a plurality of support elements are positioned at the corners of the distal portion of the sled, wherein there is a gap between the two support elements, which gap is of a size so as to allow a charge port to be accessed by a charge interface of a charger for an electronic device when the device is retained within the sled. For instance, the gap is of a size so as to allow a charge port of a retained electronic device to be functionally accessed by a portion of a charger that is capable of being inserted between the support elements so as to interface with the retained device and be charged thereby.

It is to be understood that as depicted a plurality of supports are positioned on the corners of the sled, however, in various instances, the supports may extend along the entire proximal and/or distal portions or simply cover one or two corners of the device. For instance, the sled may include a plurality of support elements, such as at least one of the plurality of support elements is positioned at a corner of the proximal portion and at least one of the plurality of support elements is positioned at a corner of the distal portion. In other instances, a support element is positioned at each of the corners of the sled. In other instances, the support elements circumscribe the entire distal and/or proximal and/or side portions.

In various instances, one or more of the support elements may additionally include one or more functional features, such as one or more aperture or cutout features. For instance, as can be seen with respect to FIG. **3**A, the support elements **30***a* and **30***b* may include a cutout portion **34***a* and **34***b*. Such a cutout portion may have any configuration, however, in certain instances, the cutout portion is of a size, shape, and dimension that is capable of transmitting sound toward or away from a retained device. Accordingly, in such instances, the apertures may be positioned so as to align with a speaker or microphone portion of a retained device. In this embodiment, the cutout apertures **34***a* and **34***b* are positioned on a top surface of the pockets **30***a* and **30***b*.

Further, as can be seen with respect to FIG. **3**B, in certain instances, the pockets **30***a* and **30***b* may include cutout portions **32***a* and **32***b* positioned on a side surface of the pockets, which cutout portions function for transmitting sound to and/or away from a retained device. It is noted that although the depicted pockets **30***a* and **30***b* include two sets of pockets, in various instances, the pockets may not include any cutout portions, one, two, three, or more cutout portions and/or the pockets and/or cutout portions may have a different configuration as that embodied with respect to FIGS. **3**A and **3**B.

In certain instances, it may be useful for the sled to include one or more attachment elements. For instance, the sled **1** may include an interface that is configured for allowing the sled to be coupled to an attachment element, such as a utility element that further allows the sled to function in a particular useful way. For example, in various embodiments, the sled is configured for receiving a utility attachment.

Accordingly, the sled may be adapted for being coupled to a utility member such as a belt clip member, a bike clip member, an armband member, a universal mounting member, a car mounting system, a windshield mounting system, an external or internal battery charging system, a solar panel system, an external speaker system, and the like. For instance, a portion of the sled may be configured for being removably or non-removably coupled to one or more utility members the coupling of which converts the sled into one or more accessories for use with an electronic device or a housing therefore, more specifically for use in transporting and/or using an electronic device during transportation. In certain embodiments, the one or more accessory attachments may be interchangeable with the sled making the sled and attachments an interchangeable system, in other embodiments, once an attachment is coupled to the sled it is coupled in a non-removable fashion.

Although the sled **1** may be coupled to a utility attachment in any suitable manner that allows for said coupling, FIGS. **4**A-**4**C provide a particular exemplary embodiment of a mechanism for coupling the sled **1** with a plurality of utility attachments. For instance, FIG. **4**A provides a depiction of an attachment aperture **20** of the sled **1**, which attachment aperture **20** is configured for receiving a portion of a utility attachment and being coupled therewith. In this embodiment, the attachment aperture **20** of the sled is configured as a circular aperture, however, the shape and the size of the aperture may differ so long as it is capable of facilitating the coupling of the sled **1** with the utility attachment.

Accordingly, it is to be understood that although the descriptions herein provide an exemplified manner in which the utility attachment is to be coupled to the sled **1** via the attachment aperture **20**, the particular coupling mechanism employed may differ from that set forth herein in many various suitable manners. For instance, in various instances, a utility attachment as herein described may be coupled to a sled through a corresponding bolt or screw-like interface, as depicted in FIG. **9**A, a corresponding hinge interface, also depicted in FIG. **9**, a corresponding clip interface, a differently configured snap interface, an adhesive interface, a hook and loop interface, a bolt or rivet interface, a slide and catch interface, and the like.

As depicted, the sled **1** includes an attachment aperture **20**, which aperture **20** is configured for receiving a snap interface **25** of a utility attachment. This particular attachment aperture **20** includes a snap-tooth receptacle portion **20***b*, configured for receiving a portion of a snap **25** therein, such as snap teeth **26**. Additionally, the attachment aperture **20** includes an attachment ledge **20***c* which ledge **20***c* is configured for engaging a portion of a snap interface **25** so as to prevent the snap interface **25** from being removed from the aperture once inserted therein and coupled thereto.

For instance, as can be seen with respect to FIG. **4**B, a utility attachment to be coupled to the sled **1** may include a snap-tooth interface **25**, which snap-tooth interface includes one or more teeth **26**, each of which teeth may include an attachment ledge interface **27**, which ledge interface **27** is

configured for being coupled to the attachment ledge **20***c* in either a removable or non-removable manner.

For example, as depicted in FIG. **4**B, the snap-tooth interface **25** includes a plurality of snap-teeth, such as **26***a*, **26***b*, **26***c*, and **26***d*, each of which snap-teeth includes an attachment ledge interface **27***a*, **27***b*, **27***c*, and **27***d* that is configured for being coupled to the attachment ledge **20***c*. Specifically, each tooth member **26** may be fabricated so as to be at least partially flexible such that as the tooth portion **26** of the snap-tooth interface **25** is inserted into the attachment aperture **20**, the tooth body flexes and/or otherwise bends inwards toward the center of the snap-tooth interface such that the attachment ledge interface **27** moves from a first, rest position to a second retracted position while being inserted, and once completely inserted the snap-tooth body snaps back into its first, rest position and in such process the snap-tooth ledge interface **27** couples to the ledge **20***c* thereby preventing the snap-tooth interface **25**, and the utility attachment having said interface **25** from being removed from the sled **1** while the teeth ledge interfaces **27** are engaged with the ledge **20***c*.

The snap-tooth interface **25** may be configured to be moveable and/or removable or may be configured for being stationary and non-removable. For instance, as depicted in FIG. **2**B, the teeth **26** of the snap-tooth interface **25** can be decoupled from the ledge **20***c* by applying inward pressure against the teeth **26** thereby causing the ledge interface **27** to withdraw from its engagement from the ledge **20***c* and thereby allowing the attachment to be decoupled from the sled **1**. Such inward force may be applied by the fingers or other such tool. Further, the teeth **26** are capable of being moved circumferentially around the aperture **20** so as to change the orientation of the utility attachment.

However, if desired, the teeth can be permanently fixed by the addition of an adhesive and/or by preventing the inward movement of the teeth once coupled to the ledge **20***c*. In certain embodiments, a further attachment, e.g., a snap-interface cap **19**, may be provided, wherein the cap **19** is capable of attaching to a front surface of the elongated member **10***a* at the attachment aperture **20***a*, such as by attaching to the teeth **26** of the snap-tooth interface **25**.

For instance, as can be seen with respect to FIG. **4**C, a cap **19** may include one or more snap-tooth attachment elements, e.g., **19***c*, **19***d*, **19***e*, and **19***f* that are configured for being coupled to one or more of the teeth **26** of the interface **25**. Such a cap **19** may include a top surface **19***a* and a bottom surface **19***b* having one or more tooth attachment elements. The cap **19** may serve one or more of a number of functions; the cap covers the aperture **20** so as to make the front surface **10***a* of the elongated member **10** smooth, flat and/or planar. Further, it can prevent access to the snap-teeth **26**, thereby preventing their removal, e.g., movement planar to elongated member **10**, but not preventing their movement, e.g., circumferentially within the aperture **20**. Additionally, it can be configured to prevent circumferential movement of the teeth **26**, such as by being locked into place within the aperture **20**, such as by an adhesive, having an additional groove or receptacle and extended catch configuration, and the like. FIG. **4**D provides a top surface **19***a* of the cap **19** of FIG. **4**B.

As depicted, the teeth **26** of the snap-tooth interface **25** are configured for being inserted into the aperture **20** and being coupled thereto, and yet moveable, e.g. circumferentially, therein, so as to allow a utility attachment element having the snap tooth interface **25** positioned thereon to change its orientation. Accordingly, the attachment aperture **20** on the front **10***a* or back surface **10***b* of the elongated member **10** may further have a configuration adapted to modulate this movement.

As can be seen with respect to FIG. **4**E, a surface of the elongated member **10**, such as that surrounding the aperture **20** may include articulating members **22**, which members are adapted to modulate the rotation of the interface **25** circumferentially within the aperture **20** so as to modulate the orientation of an associated accessory containing the snap-tooth interface **25**. In a manner such as this the position of a utility attachment may be changed with respect to the elongated member. A suitable articulating member **22** may have any suitable configuration so long as it is capable of modulating the movements of the utility attachment with respect to the elongated member. However, in this embodiment, the articulating members include a plurality of raised blocks **22***a* that surround the aperture **20**, have a height indicated by **22***b* and are separated from one another by troughs **22***c*. Also included are home articulating members **22***d* and **22***e* which are positioned on a surface of the elongated member **10** so as to orientate a utility attachment in a home position, such as a position wherein an elongated plane of the utility attachment is parallel to a corresponding elongated plane of the elongated member **10**.

FIG. **4**F depicts a sled **1** of the disclosure having a utility attachment coupled thereto via the association of a snap-tooth interface **25** with an attachment aperture **20**. As can be seen, the snap-teeth **26** are affixed within the aperture **20** by the coupling of the snap-tooth ledge interface **27** with the attachment ledge **20***c*. FIG. **4**F depicts the sled **1** without the snap-tooth cover **25** coupled thereto, and FIG. **4**G depicts the sled **1** with the snap-tooth cover **25** associated with the snap-teeth **26** and the front surface **10***a* of the elongated member **10** of the sled **1**. Also depicted are the dead stops **16***a* and **16***b*, the clasping mechanism **14**, and camera orifice **18**, as well as distal portion pockets **30***a* and **30***b*. FIG. **4**H depicts a front view of a sled **1** with a snap interface cap **19** attached at the attachment aperture **20***a* (not shown).

FIG. **4**I provides an alternative embodiment of sled **1** of the disclosure without a snap tooth cover **25** applied, wherein the proximal and distal portions of the sled are configured as shown in FIGS. **1**D-**1**I. FIG. **4**I shows a rear view of the rear surface **10***b* of sled **1**, including elongated member **10**, locking mechanism **14**, clasp retaining elements **14***o* and **14***p*, camera aperture **18**, raised blocks **22***a*, height **22***b*, troughs **22***c*, home articulating members **22***d* and **22***e*, and cutout portions **32***a* and **32***b*. FIG. **4**J is a perspective view of the rear surface **10***b* of sled **1**, including raised blocks **22***a*, troughs **22***c*, and home articulating members **22***d* and **22***e*. In certain embodiments, the raised blocks **22***a* and troughs **22***c* allow for the space interface cap or any apparatus attached to such a cap to be rotated in relation to the sled and held at various angles to the sled based on the positioning of the troughs **22***c*.

FIG. **4**K is a perspective view of the front surface **10***a* of an alternative embodiment of sled **1**, as configured in FIG. **1**D. The sled includes including extended portion **10**, a proximal portion **12** *c*, distal portion **12***d*, front surface **10***a*, pockets **16***a* and **16***b*, supporting elements **30***a* and **30***b*, supporting element cutouts **30***c* and **30***d*, clasp retaining elements **14***o* and **14***p*, camera aperture **18**, cutout portions **32***a* and **32***b*, and snap interface **25**. FIG. **4**L is a perspective view of the front surface **10***a* of a sled **1**, including a snap interface **25**. The snap interface **25** includes a snap aperture **20***a*. In certain embodiments, snap teeth **26***a-d* are sitting on attachment ledge **20***c* and abutting the snap tooth receptacle **20***b*. FIG. **4**M shows an alternative embodiment of a snap-interface cap **19** that can be attached to the snap interface shown in FIG. **4**L. The exemplary snap-interface cap **19** of FIG. **4**L includes snap-tooth elements, e.g. **19***c*, **19***d*, and **19***e*, configured for being coupled to the snap teeth **26***a-d* of the snap interface **25**. Snap

tooth stop **19***g* prevents the snap-interface cap **19** from rotating, while the accessory tooth **19***h* connects the snap-interface cap directly to an accessory associated with the sled. For instance, the accessory could be a belt clip or any of a variety of mounting apparatus described herein. FIG. **4**N shows a perspective view of snap-interface cap **19**, including snap-tooth elements **19***c-d*, snap tooth stop **19***g* and accessory tooth **19***h*.

FIG. **5** provides an exemplary embodiment of a utility attachment **40** for attachment to the sled **1**. This particular utility attachment is configured as a clip, such as a belt clip. The belt clip **40** can have any suitable size and any suitable shape so long as it is capable of being coupled to the sled **1** and further capable of attaching the sled **1** to a belt. For instance, in certain instances, the length of the belt clip **40** may be about 0.5 inches, 1 inch, 1.5 inches, 2 inches, and the like.

As can be seen with respect to FIG. **5**A, an exemplary belt clip **40** to be attached to a sled **1** of the disclosure may include a top member **42** and a bottom member **44**, wherein the bottom member **44** includes a snap-tooth interface **25** configured for being fit within a utility attachment aperture **20** of the sled **1** as described above. Accordingly, the snap-tooth interface **25** includes a plurality of, e.g., four, snap teeth, **26***a*-**26***d*, each snap tooth including an attachment ledge interface **27***a*-**27***d* for being coupled with an attachment ledge **20***c* of an attachment aperture **20**. In a manner such as this, the belt clip **40** may be either removably or non-removably attached to the sled **1**, as described above. In this embodiment, the belt clip **40** is configured for being removably attached to the sled **1**, and thus, when coupled with other utility accessory attachments, as described herein below, may form a kit of interchangeable utility attachments, each of which removable utility attachments may be interchanged with one another in their coupling to the sled **1**.

The bottom member **44** and top member **42** of the clip **40** are capable of being associated with one another. Although the top member **42** may be coupled to the bottom member **44** in any suitable manner, in this instance, this coupling is in such a manner that the top member **42** is capable of moving, e.g., rotating, relative to the bottom member **44**. Thus, the top member **42** is moveably coupled to the bottom member **44**, such as at an axle **45** interface. For instance, the top and bottom members **42** and **44** may have corresponding axle receptacle **45***a* and **45***b*, which axle interfaces are configured for receiving an axle **45** there through such that when coupled together via the axle **45** the top member **42** is capable of rotating away from the bottom ember **44** about the axle **45**.

The top member **42** further includes a belt retention element **47**. The belt retention element **47** includes an extended member **47***a* that displaces the top member **42** away from the bottom member **44** a distance suitable such that a belt may be received in between the top **42** and bottom **44** members. The extended member **47***a* further includes a belt retention member **47***b*, which belt retention member is configured for interfacing with a belt such that the sled **1** may not be removed from its attachment to a belt until the belt retention member **47** is disengaged from the belt. It is to be noted that the belt clip **40** includes a circular snap-tooth interface **25**, which snap-tooth interface **25** is associated with the attachment aperture **20** in such a manner that the belt clip **40** is capable of rotating about the sled **1**, such as in an articulated manner.

FIG. **5**B depicts a top surface **42***a* of the top member **42** of a belt clip **40**. Also depicted is a grip feature that is positioned on a proximal portion of the top member **44** and designed to facilitate the rotation of the top member relative to the sled **1**.

FIG. **5**C provides a depiction of a bottom surface **42***b* of a top member **42**, which top member **42** is configured for being rotatably coupled to a bottom member **44**, such as at an axle interface **45***a*. The axle interface **45***a* is configured as a receptacle that is adapted to receive an axle member **45**, e.g., a pin, there through. Also depicted are the extended member **47***a* and belt retention member **47***b* of the top member **42**.

FIG. **5**D depicts a top surface **44***a* of a bottom member **44** of the belt clip **40**. The bottom member **44** is configured for being coupled to a top member **42**, such as at an axle interface **45***b*. The axle interface **45***b* is configured as a receptacle that is adapted to receive an axle member **45**, e.g., a pin, therethrough. Also depicted are the base members for snap teeth **26***a*-**26***d*.

FIG. **5**E depicts a bottom surface **44***b* of the bottom member **44** of the clip **40**. The bottom surface **44***b* of the bottom member **44** includes a snap-tooth interface **25**, which snap-tooth interface includes a plurality of, e.g., four, snap teeth, **26***a*-**26***d*. FIG. **5**F depicts a back surface **10***b* of the elongated member **10** of the sled **1** with a belt clip accessory **40** attached thereto. Also depicted is a camera feature **18** and a locking slide **15**, which locking slide **15** is coupled to a clasping mechanism **14**. Further depicted are the back surface of the support pockets **30***a* and **30***b*, which pockets are separated from one another by a gap, such as a gap sized so as to allow a charger port interface to be inserted there between thereby allowing a retained electronic device to be charged while within the sled **1**.

FIG. **5**G provides an alternative embodiment of a sled attached to a belt clip, as described supra and in FIGS. **1**D-**1**H. FIG. **5**G depicts a perspective view of the rear side of a sled **1**, including belt clip **40**, and a housing **100**. FIG. **5**H provides a perspective view of an alternative embodiment of a bottom member **44** of a belt clip, including: top surface **44***a*; axle receptacle **45***a*; axle interface **45***b*; belt clip attachment tongues **26***e*, **26***f*, **26***g*; and belt clip attachment grooves **26***h*, **26***i*, **26***j*. FIG. **5**I depicts a perspective view of an alternative embodiment of a bottom member **44** of a belt clip, including: bottom surface **44***b*; axle receptacle **45***a*; axle interface **45***b*; belt clip attachment tongues **26***e*, **26***f*, **26***g*; and belt clip attachment grooves **26***h*, **26***i*, **26***j*. The belt clip attachment tongues and belt clip attachment grooves are formed from an attachment pedestal **26***k* that extends outward from the bottom surface **44***b* of the bottom member **44**. The bottom member is configured so that the belt clip attachment tongues **26***e-g* mate with cap grooves in a cap attached to a sled (described infra and depicted in FIG. **5**J). Similarly, belt clip attachment grooves **26***h*-**26***j* are configured to mate with cap tongues that extend outward from the rear surface of a cap attached to a sled (see FIG. **5**J infra). The bottom member of the belt clip can then be rotated to secure the bottom member into the cap. FIG. **5**J depicts a perspective view of the front surface **10***a* of a sled **1** with a cap **19**, including cap tongues **19***i*, **19***j*, **19***k*, and cap grooves **19***l*, **19***m*, **19***n*. The cap tongues extend towards the rear surface of the sled and are not seen in their entirety.

FIG. **6** provides another utility accessory attachment this time configured as a bike mount sled attachment **60**. As can be seen with respect to FIG. **6**A, a sled **1** of the disclosure may be coupled to a bike mount sled attachment **60**, so as to allow the sled **1** to be removably attached to a portion of a vehicle, such as a bar portion of a bicycle, motorcycle, hang glider, and the like. Accordingly, the bike mount accessory includes a sled attachment base member **60** having a top **60***a* and a bottom surface **60***b*. In a manner similar to that described above, a back surface **10***b* of a sled **1** may be coupled to a back surface **60***b* of the bike mount sled attachment base **60** via a suitable snap-tooth interface **25**, which interface is capable of being coupled to the sled **1**, as described above.

The snap-tooth interface **25** of the bike accessory attachment base **60**, however, is configured a bit differently than the snap-tooth interface of the belt clip attachment **50**, because in this embodiment, the snap-tooth interface **25** includes eight separate snap-teeth **25***a*-**25***h*, which snap teeth are configured for engaging an attachment ledge **20***c* of the attachment aperture **20** of the sled **1** as described above. The additional teeth function in part to prevent the bike mount attachment from rotating about the aperture **20**, and further function to provide a firmer coupling between the bike mount sled attachment base **60** with the sled **1**. The bottom surface **60***b* of the bike mount sled base **60** additionally includes attachment edge rails **61***a* and **61***b* that are configured for engaging the edges **12***a* and **12***b* of the sled **1** in a manner such that the rails **61***a* and **61***b* wrap at least partially around the edges **12***a* and **12***b* so as to further prevent the bike mount sled attachment base **60** from rotating with respect to the sled **1**. The bike mount sled attachment base **60** need not move with respect to the sled **1** because a top surface **60***a* of the bike mount sled attachment base **60** includes a rotatable ball member receptacle **62**, which rotatable ball member receptacle **62** includes a plurality of joint walls **62***a*-**62***d*, which joint walls are configured for forming the receptacle **62** adapted for receiving a rotatable ball attachment member **67***b* that forms a rotatable ball joint **66**.

Specifically, FIG. **6**B provides a top surface **60***a* of a bike mount sled attachment base member **60**, which top surface includes a ball member receptacle **62**, which ball member receptacle includes four receptacle walls **62***a*, **62***b*, **62***c*, and **62***d*, which walls are configured to define a cavity **62** within which a corresponding ball attachment member **67***b* may be positioned therein. Accordingly, the bike mount sled attachment includes a base member **60**, which base member **60** is configured for being coupled to a sled **1** of the disclosure, and further includes ball member receptacle walls **62***a*-**62***d* defining a ball member receiving receptacle **62** that is configured for being coupled with a ball attachment member **67***b* so as to form a rotatable ball joint. The walls of the ball attachment member receptacle **62***a*-**62***d* include threads **63***a*-**63***d*, which threads are configured for being removably coupled to corresponding threads **68***f* of a tensioning member **68**, which tensioning member **68** functions to tighten the ball joint **66** and thereby locking it down and preventing its movement. FIG. **6**C provides a side view of a bottom surface **10***b* of a sled **1** of the disclosure wherein the sled **1** is coupled to a base **60** of a bike mount sled attachment member. FIG. **6**D provides a side view of a top surface **10***a* of a sled **1** of the disclosure wherein the sled **1** is coupled to a base **60** of a bike mount sled attachment member.

FIG. **6**E depicts exemplary elements of a bike accessory sled attachment element **60** having a ball member assembly **67** and tensioning element **68** capable of being associated therewith so as to form a ball joint attachment member **66**. The ball joint assembly **66** therefore includes a ball member assembly **67** and a tensioning element **68**, both of which are configured for being moveably associated with the bike accessory sled attachment base **60**. Accordingly, as depicted, the bike accessory sled attachment element **60** includes a ball attachment member receiving receptacle **62**, which ball attachment member receiving receptacle **62** is configured for receiving a ball member **67***b* of a ball member assembly **67**, wherein the ball assembly **67** allows for an electronic device to be retained within the sled **1** and further to be attached to a bar member, such as a bar member of vehicle, such as a bicycle, and yet be allowed to rotate despite being attached thereto.

The ball member assembly **67** includes a bar attachment member **67***a*, a ball member **67***b*, and a clasping mechanism **67***c*. The bar attachment member **67***a* is configured so as to be attached to a portion, such as a bar portion, of a bicycle, a motorcycle, or other such vehicle, or any object having a bar member to which the ball member assembly **67** may be attached, and the like. In one instance, the bar attachment member **67***a* is composed of a flexible or semi-flexible member that is configured to form an orifice into which orifice a substrate, e.g., a bar member, may be positioned, and thus, the bar attachment member **67***a* is configured for being fit around a substrate.

Further, the bar attachment member **67***a* is configured to be coupled to a clasping mechanism **67***d*, which clasping mechanism **67***d* is adapted for locking the bar attachment member **67***a* down into position around the substrate to which it is attached. This clasping mechanism **67***d* may have any suitable configuration so long as it is capable of locking the bar attachment member **67***a* in place.

In this instance, the bar attachment member **67***a* includes a clasping mechanism interface that corresponds to a similar interface on the clasping mechanism **67***c*, which interfaces are designed to interface with one another so as to couple the attachment member **67***a* to the clasping mechanism **67***c*. A suitable interface includes an extended member positioned on an end of the attachment member **67***a*, and an indented portion positioned on an end of the clasping mechanism **67***c*, wherein the indented portion has a "Y" configuration that is configured for receiving the extended portion in between the legs of the "Y". Both the extended member and indented portion may include orifices through which an axle, e.g., a pin, may be inserted so as to couple the two together. The clasping member **67***c*, therefore, may be configured for rotating about the axle so as to effectuate the locking of the attachment member **67***a*.

The clasping member **67***c* may further include a locking unit **67***d*, which locking unit **67***d* is configured for interfacing with a ridged locking region on the attachment member **67***a* so as to be able to lock the attachment member **67***a* in place. For instance, the clasping member **67***c* is rotates about the axle from a first, unengaged position, to a second, engaged position, so as to allow the locking unit **67***d* to engage the ridged locking region of the attachment member, e.g., between the ridges. Once engaged, the clasping member **67***c* is rotated back from its second engaged position to a third, locked, position, thereby locking the attachment member **67***a* in a locked position, e.g., around a bar member of a vehicle. The first and third positions may be the same general position.

Further, in this instance, the bar attachment member **67***a* further includes a ball member **67***b*. As can be seen with respect to FIG. **6**F, the ball member **67***b* is configured for being attached to a ball attachment member receiving receptacle **62** of a bike accessory sled attachment element **60**. Specifically, in this instance, the ball member **67***b* is configured for being received within the ball attachment member receiving receptacle **62** of the sled attachment element **60**. This engagement allows the bar attachment member **67***a* to be coupled to the sled **1** via the ball member **67***b* being coupled to the sled attachment element **60** via the ball attachment member receiving receptacle **62**, in a moveable engagement. For example, the ball member **67***b* may move and/or rotate within the receiving receptacle **62** around the ball of the ball member **67***b*. This, therefore, allows the sled **1** to move through a variety of orientations once attached to a bar portion of a vehicle.

In various instances, it may be useful to lock the sled **1** into a given orientation once positioned on a suitable substrate via

the bar attachment member **67**. Accordingly, in such an instance, a locking element may be included to lock the sled **1** into a given orientation. Such a locking element may have any suitable configuration so long as it is capable of engaging the attachment member **67** and/or the sled attachment member **60** in such a manner so as to lock the orientation of the sled into a desired orientation.

For instance, in this instance, a tensioning element **68** may also be included. The tensioning element **68** may have any suitable configuration, and in this instance, the tensioning element **68** includes an orifice, which orifice is configured for receiving the walls of a ball attachment member receiving receptacle **62** therein. For example, the interior boundary **68***f* of the tensioning element **68** and the walls of the receiving receptacle **62** may have corresponding threadlike interfaces so as to allow them to be "screwed" together.

Accordingly, the tensioning element **68** is configured for interfacing with the wall members of the ball attachment member receiving receptacle **62**, so as to decrease the aperture of the receptacle **62**, e.g., by moving the walls **62** inwards via screwing, and thereby engage the ball member **67***b* in such a manner that the ball member **67***b* is no longer capable of moving within the receptacle **62**, consequently locking the sled **1** into a desired orientation. To facilitate this coupling, the tensioning element **68** may include grip features **68***a*-**68***e*, for increasing the grip-ability of the tensioning element **68**. The tensioning element **68** further includes thread feature **68***f*, which threads correspond to a like threaded region on the sled attachment member **60**.

As can be seen with respect to FIG. **6**G, the tensioning element **68** may engage the wall members **62***a*-**62***d* of the ball attachment member receiving receptacle **62** of the sled attachment element **60**, in any suitable manner. However, in this instance, this engagement is configured as corresponding screw-threads, which threads allow the tensioning element **68** to be screwed around the wall members **62***a*-**62***d* thereby modulating the dimensions of the aperture **62**, so as to lock the orientation of the ball member **67***b* in place. The wall members **62***a*-**62***d* include thread features **63***a*-**63***d*, which thread features correspond to thread features **68***f* of the tensioning member **68**.

FIG. **6**H provides a suitable a bike mount sled attachment, wherein a bike mount sled attachment base member **60** is attached to a bar attachment member **67**, wherein the two members are locked into place by tensioning member **68**. FIG. **6**I provides the bike mount sled attachment as it is when coupled to a suitable sled **1**.

FIGS. **6**J-**6**T provide several preferred ball assemblies for removably attaching a utility accessory attachment according to any of FIGS. **6**A-**6**I to a threadless bicycle headset (not shown) using a headset bolt or stem cap screw.

As those in the art will appreciate, the representative embodiments illustrated in FIGS. **6**J-**6**T may be readily adapted for use with other vehicles, including bicycles having threaded headsets, motorcycles, hang gliders, and the like. In such embodiments, the use of a ball and socket, or "rotatable ball member receptacle", **62**, as shown in these figures forms an adjustable ball joint that allows the user to manually adjust the sled's position in relation to the bicycle in order to mount the sled at a desired position. When the desired position is achieved, the user can secure the ball in the receptacle **62** or cavity by adjusting the tensioning member (e.g., element **68**, FIG. **6**G) to tighten the ball joint and thereby lock it down so as to prevent movement of the ball in the socket, thereby securing the user-selected position of the sled in relation to the bicycle's headset.

Turning to the figures, FIG. **6**J shows an exploded view of one embodiment of a ball assembly **500** according to the invention. The ball **501** contains a threaded bore **503** accessible through an opening **505** in its underside. The threaded bore **503** is adapted to receive the threaded portion **507** of a stem cap having an integrated post **509**. The stem cap and post **505** has a through-bore **511** having two diameters. The diameter "x" of the upper portion of the through-bore is larger than the diameter "y" of the upper portion of the through-bore, as lower portion of the must be sufficiently sized to accommodate the threaded portion **523** of the stem cap screw **520**, while the upper portion of the through-bore **511** must be sufficiently sized to accommodate the head **521** of the stem cap screw **520**. The intersection of the upper and lower portions of the through-bore **511** is bounded by a seat **510** configured to engage the lower engaging surface **522** of the head **521** of a stem cap screw **520**.

The ball assembly shown in FIG. **6**J is assembled onto a threadless bicycle headset (not shown) by positioning the stem cap and post **505** atop a threadless bicycle headset, inserting the stem cap screw **520** into the through-bore **511**, tightening the stem cap screw **520**, and then screwing the ball **501** onto the stem cap and post **505**. A cross-section of such an assembled ball assembly **500** is shown in FIG. **6**K. A utility accessory attachment as shown, for example, in FIG. **6**D, can then be securely yet removably attached to the bicycle-mounted ball assembly using a tensioning element (e.g., element **68**, FIG. **6**G) capable of being associated therewith. A bicycle having such a utility accessory attachment so mounted is then suited to retain a portable electronic device, e.g., a cellular phone, in the sled, with the sled, and hence the electronic device, positioned in manner determined by the particular user.

FIG. **6**L shows an alternative embodiment of an integrated ball assembly **530** according to the invention. Here, the ball **531**, stem cap **535**, and threaded stem cap screw **540** are unitary, single piece. In this embodiment, the ball **531** is elevated above the stem cap portion **535** by a post **532**, which can be any suitable height. FIG. **6**M shows a similar alternative embodiment, wherein a conventional stem cap screw (not shown) is replaced by a ball-topped stem cap screw **550** have a ball portion **552** opposite its threaded portion **554**. Such an embodiment does not require replacement of the stem cap **558**, which, if desired, can be reused. In this embodiment, the original stem cap screw (not shown) is removed and replaced with the ball-topped stem cap screw **550** shown in FIG. **6**M. The ball portion **552** is positioned above a post region **553**, which is disposed on top of a spacer **551** which, when the ball-topped stem cap screw **550** is screwed into position in the headset (not shown), fits within and closely associates with the wall of cylindrical bore **559** in the stem cap **558**.

FIGS. **6**N-**6**T show further alternative embodiments of a ball-topped stem cap screw (**560**, **570**, **580**, **590**, **600**, **610**, **620**, respectively) that can be used, for example, to replace an existing stem cap screw on a threadless bicycle headset (not shown). These embodiments are interchangeable with the embodiment shown in FIG. **6**M, and thus the stem cap (**558**) is not shown. In these embodiments, the ball portion (**561**, **571**, **581**, **591**, **601**, **611**, **621**, respectively) is disposed opposite the threaded portion (**562**, **572**, **582**, **592**, **602**, **612**, **622**), with the ball portion (**561**, **571**, **581**, **591**, **601**, **611**, **621**, respectively) positioned above a post region (**563**, **573**, **585**, **593**, **603**, **613**, **623**, respectively), which is disposed on top of a spacer (**551**) that again fits within and closely associates with the wall of the cylindrical bore that extends through the stem cap.

The differences between the embodiments shown in FIGS. **6**N-**6**T (**560**, **570**. **580**, **590**, **600**, **610**, **620**, respectively) concern features useful in securing the ball-topped stem cap screw to a threadless bicycle headset. The embodiments shown in FIGS. **6**N and **60** include a plurality of wrench flats (2 or 6, for example; elements **564**, **574**, **584**, **594**) on the post regions **563**, **573**. Alternatively, as shown in FIGS. **6**P and **6**Q, wrench flats (for example, 2 or 6) can be included in the ball portion **581**, **591**. The embodiment depicted in FIG. **6**R includes a wrench socket (**604** disposed on the top of the ball portion **601**. In the embodiments shown in FIGS. **6**S and **6**T, the post region (**613**, FIG. **6**S) or ball region **621** includes a cylindrical spanning bore **614**, **624** (which may or may not extend through the entire post region so as to be accessible from either side) into which a spanner wrench, bar, or pin can be inserted for tightening the ball-topped stem cap screw **610**, **620**.

FIG. **6**U shows an alternative embodiment of a sled attached to a bike mount incorporating the sleds of **1**D-**1**I and the clasping and locking elements of FIGS. **2**H-**2**M. In certain embodiments, the sled includes a clasping element **14** and locking element **15** held between clasp retaining elements **14***o* and **14***p*. The sled also includes hard stops **16***a* and **16***b*, supporting elements **30***a* and **30***b*, cutout portion **32***b* (cutout portion **32***a* not shown), and supporting element cutouts **30***c* and **30***d*. The bike mount **60** is attached to the sled at elongated member **10**, the bike mount **60** including bar attachment member **67** and tensioning member **68**. FIG. **6**V provides a side view of the sled attached to a bike mount of FIG. **6**U, including bike mount **60**, bar attachment member **67**, tensioning member **68**, and elongated member **10** The curvature of the elongated member of the sled is configured to aid in the removal of a case from the sled. In addition, the curvature of the elongated member improves retention of a case coupled with the sled, as the force retaining the case in the sled is concentrated at the four corners of the sled, hard stops **16***a* and **16***b* (hard stop **16***b* not shown), and supporting elements **30***a* and **30***b* (supporting element **30***b* not shown). The curvature of the sled also improves shock resistance of the sled, as it allows the sled to flex if dropped or struck. FIG. **6**W provides a perspective view of the rear side of the sled attached to a bike mount of FIG. **6**U, including rear surface **10***b*, bike mount **60**, bar attachment member **67**, tensioning member **68**, rotatable ball member receptacle **62**, and elongated member **10**. The sled is rotated horizontally relative to the bar attachment member **67**. FIG. **6**X provides a perspective view of the rear side of the sled attached to a bike mount of FIG. **6**W, including and a case or housing **100** partially contained in the sled at supporting elements **30***a* and **30***b* (supporting element **30***a* not shown), and includes bike mount **60**, bar attachment member **67**, tensioning member **68**, rotatable ball member receptacle **62**, and elongated member **10**.

FIG. **7** provides another embodiment of a sled **1** of the disclosure this time configured for being coupled with a band such as an arm band, a leg band, a waist band, wrist band, a head band, and the like. The sled **1** is similar to that described above in that it includes an elongated member **10** having front and back surfaces **10***a* and **10***b*, which elongated member **10** is surrounded by a proximal portion **12**. The elongated member **10** further has a proximal portion **12***c* and a distal portion **12***d*, wherein the proximal portion includes a plurality of dead stops **16***a* and **16***b*, configured for supporting a device to be retained in the sled **1**, and further includes a clasping mechanism **14** that is adapted for clasping onto a device to be retained within the sled **1** and thereby retaining it therein. The distal portion **12***d* also includes a plurality of support members configured as pockets **30***a* and **30***b*, which pockets are configured for associating with the corners of a retained device so as to support and facilitate the retention a distal portion thereof.

With respect to FIG. **7**, however, instead of depending on an attachment element **20**, which allows the sled **1** to be coupled to a clip-like attachment element, such as provided in FIGS. **5** and **6**, the sled **1** of FIGS. **7**A and **7**B includes retaining apertures **13**, which apertures are configured for being coupled with a band **215**, such as an arm band, etc., that is configured for allowing the sled **1** to be removably attached to an object, such as a user's arm, leg, wrist, waist, head, or the like. FIGS. **7**A and **7**B provide one instance of a sled **1** of the disclosure, wherein the sled **1** is configured for being coupled with a band **215**. FIG. **7**A provides a front surface of the sled **1**, and FIG. **7**B provides a back surface of the sled **1**. The sled **1**, therefore, includes retaining apertures **13** on its opposing sides **12***a* and **12***b*, which apertures **13** are configured for receiving a portion of the band **215** therethrough so as to allow the sled **1** to be attached to an object. It is to be understood, however, that this configuration may be modified without departing from the spirit of the disclosure, such as by changing the number, size, shape, dimensions, and positions of the receptacles **13** and/or bands **215**. In this embodiment, two sets of receptacles **13***b* and **13***d* are provided on opposite sides **12***a* and **12***b* of the sled **1**. The receptacles **13***b* and **13***d* are bounded by bounding members **13***a* and **13***c*. The receptacles **13***b* and **13***d* are configured for receiving there through a portion of a band **215**, such as the band provided in FIGS. **7**C and **7**D.

FIGS. **7**C and **7**D provide a front **215***a* and a back **215***b* surface of a band **215** of the disclosure. The band **215** includes central portion front and back surfaces **215***a* and **215***b*, having two side portions stretching therefrom, which side portions are configured for being inserted through corresponding side receptacles **13** of the sled **1**, in such a manner that the front surface **215***a* aligns up with the back surface **10***b* of the sled **1**, and the corresponding sides spread out laterally therefrom, see, for instance, FIG. **7**E. The side portions may then be wrapped around an object and removably coupled to one another so as to be attached around the object.

For instance, a left hand side portion may be composed of a single or multiple materials, and in this instance, is composed of a plurality of materials. The left hand side portion therefore includes a middle portion **215***c*, which middle portion may be comprised of a stretchable material, an opposing band attachment portion **215***d*, e.g., a buckle, configured for attaching the left hand side of the band **215** with the right hand side of the band **15**, and a central portion attachment portion **215***e*, which in this instance is also a buckle that is configured for attaching the middle portion **215***c* of the left hand strap with the central portion **215***a*.

The right hand side strap portion may be composed of a single material or a plurality of materials, and in this instance, includes a single material having three portions. For example, the right hand strap includes a middle portion **215***f*, which middle portion may be comprised of a stretchable material and may further have an attachment member included thereon; an opposing band attachment portion **215***g*, e.g., a hook and loop fastener member, configured for engaging the left hand side of the band **215**, and further configured for engaging the attachment member of the middle portion **215***f*; and a side receptacle engagement portion **215***h* configured for attaching the right hand side portion to the sled **1** of FIGS. **7**A and **7**B.

For instance, the right hand strap may include a middle portion **215***f* having the loop portion of a hook and loop attachment element. The opposing band attachment portion

215*g* may include the hook portion of a hook and loop fastener element, and may be configured for being fed through the buckle **215***d* of the left hand side portion and then folded back upon itself so as to fasten with the loop fastening element of the middle portion **215***f* and in a manner such as this, the band **215** may be wrapped around an object, thereby effectuating the coupling of the sled **1** with the object. Additionally, the side receptacle engagement portion **215***h* may have the hook portion of a hook and loop attachment element, and may be configured for being fed through the retaining apertures **13***b* and **13***d* of the right hand side **12***b* of the sled **1** and then folded back upon itself so as to fasten with the loop fastening element of the middle portion **215***f*, and in a manner such as this, the band **215** may be coupled to sled **1**. It is to be understood that the various elements of the described configurations of the left and right hand strap portions of the band **215** may be mixed and matched or modified to enhance the various attachment features of the band, without departing from the spirit of the disclosure.

FIG. **7**C provides a front surface **215***a* of the band **215**. FIG. **7**D provides a back surface **215***b* of the band **215** of FIG. **7**C. As can be seen, the back surface **215***b* of the band **215** includes a raised locking mechanism receiving receptacle **215***i* and a plurality of raised cushion members **215***r* positioned at the side perimeter portions of the back surface **215***b*. Also depicted are raised grip features positioned on the two opposing central member attachment portions **215***e* and **215***h*, which raised features function to secure the attachment of the band **215** to the sled **1** by making it more difficult for side members to slip out of engagement with the receiving receptacles **13** once threaded there through. Also depicted are various apertures positioned on the various band portions which serve the function of both increasing elasticity of the band and air vents.

FIG. **7**E provides a front view of another embodiment of a strap system for the sled **1**. According to this system the opposing band attachment portion **215***d*, e.g. a buckle, is attached to the middle of the left hand portion of the strap **215***c* via a post and aperture system **215***j*. Also, in some embodiments, instead of having a central portion attachment portion **215***e* as shown in FIG. **7**C, the middle portion **15***c* attached directly to the central portion of the strap **215**. Likewise, in certain embodiments, the side receptacle attachment portion on the right side of the strap **215***h* is found on the front side **215***a*. FIG. **7**F shows a back view **215***b* of the strap.

FIG. **7**G shows a front view of the post and aperture system **215***j* connecting the opposing band attachment portion **215***d*, e.g. a buckle, to the middle portion of the left hand portion of the strap **215***c*. The end of the middle portion of the left hand strap **215***c* is sandwiched between a connector **215***k* and the opposing band attachment portion **215***d*. The posts **215***l* are shown extending from the opposing band attachment portion **215***d* through the middle of the left hand portion of the strap **215***c* and through the connector **215***k*.

FIG. **7**H shows a front view of the disassembled post and aperture system **215***j*. The middle portion of the left hand portion of the strap **215***c* has apertures **215***m* through it throughout its length. These apertures can be any size or shape or in any configuration as long as they allow the opposing band attachment portion **215***d* to be locked into the connector **215***k* using the posts **215***l* found on the opposing band attachment portion **215***d*. These apertures also serve the function of both increasing elasticity of the band and air vents. Of course, the connector **215***k* could also have posts that lock into apertures **215***o* found in the opposing band attachment portion **215***d*. In the embodiment shown in FIG. **7**H, the connector **215***k* contains apertures **215***n* that allow the posts **215***l* on the opposing band attachment portion **215***d* to pass through the middle portion of the left hand portion of the strap **215***c* and the connector **215***k*. This locks the opposing band attachment portion **215***d*.

It should be noted that the post and aperture system **215***j* allows the opposing band attachment portion **215***d* to be attached to any set of apertures **215***m* found in the middle portion of the left hand portion of the strap **215***c*. The end of the middle portion of the left hand portion of the strap **215***c* can either be folded back or cut to shorten the strap and allow the opposing band attachment portion **215***d* to be attached to the shortened end of the strap. This allows for the length of the strap **215** to be adjusted depending on the appendage or object the strap is intended to fit around.

FIG. **7**I provides a back view of the opposing band attachment portion **215***d*. This back view shows the apertures **215***o* found in the attachment portion **215***d*. These apertures are optional, and could be solid if desired. FIG. **7**J provides a front view of the opposing band attachment portion **215***d*. In this view, the posts **215***l* of the attachment portion **215***d* are shown. The posts **215***l* are shaped so that they have a broader tip **215***q* than base **215***p*. In certain embodiments, the broader tip **215***q* is about the same or slightly larger than the apertures in the strap **215***m* and/or the apertures **215***n* in the connector **215***k*. This allows for the posts **215***l* to lock into the apertures and hold the attachment portion **215***d* to the strap **215***c* and the connector **215***k*.

FIG. **7**K is a view of the connector **215***k*. In certain embodiments, the connector is symmetrical and could be applied to the middle portion of the left hand portion of the strap **15***c* to lock the opposing band attachment portion **215***d* on either surface.

FIG. **7**L is a view of where the middle portion of the left hand portion of the strap **15***c* joins the central part of the strap **215** and the sled **1**. The middle portion of the left hand portion of the strap **215***c* enters the retaining aperture **13***d* of the sled **1**. Similarly, FIG. **7**M is a view of where the middle portion of the right hand portion of the strap **215***f* joins the central part of the strap **215** and the sled **1**. The middle portion of the right hand portion of the strap **215***f* enters the retaining aperture **13***d* of the sled **1**. The receptacle engagement portion **215***h* is found on the front face of the strap in this embodiment.

FIG. **7**N is a view of the same perspective as FIG. **7**M, with the receptacle engagement portion **215***h* lifted up to show the underside. As shown, the underside of the receptacle engagement portion **215***h* has a hook and loop connector system that engages the corresponding part of the system on the front face of the middle portion of the right hand portion of the strap **215***f*. Also, the receptacle engagement portion **215***h* is directly attached to the middle portion of the right hand portion of the strap **215***f* before the strap enters the retaining aperture **13***d* of the sled **1**.

FIG. **7**O shows a view of the left **215***c* and right **215***f* portions of the strap and where they join the front surface of the strap **215***a*. As shown, the left **215***c* and right **215***f* portions of the strap are fixedly attached to the front surface **215***a* of the strap. Thus, there is no need for a functional central portion attachment portion **215***e* or receptacle engagement portion **215***h* as shown in FIG. **7**E. The strap in this embodiment is all one piece.

FIG. **7**P shows a back view of the left side **215***c* of the strap **215**. The middle portion of the left hand portion of the strap **215***c* contains a plurality of raised cushion members **215***r* positioned at the side perimeter portions of the back surface of the strap. Likewise, FIG. **7**Q shows a back view of the right side **215***f* of the strap **215**. The middle portion of the right hand portion of the strap **215***f* contains a plurality of raised

cushion members **215***r* positioned at the side perimeter portions of the back surface of the strap.

FIG. **7**R shows an alternative embodiment of a sled that includes retaining apertures coupled with a band, wherein the locking mechanism is that described supra and shown in FIGS. **2**H-**2**M. In the illustrated embodiment, the sled **1** is connected with a band **215**, the sled including a clasping element **14** and locking element **15** held between clasp retaining elements **14***o* and **14***p*. The sled also includes hard stops **16***a* and **16***b*, supporting elements **30***a* and **30***b*, supporting element cutouts **30***c* and **30***d*. The sled also includes raised support elements **30***e* and **30***f* (**30***f* not shown). A portion of the front surface **10***a* of the sled is curved such that when a case containing a mobile device is inserted into the sled, a portion of the front surface **10***a* does not touch the entire back surface of the case. The curvature of the front surface of the sled is configured to aid in the removal of a case from the sled. In addition, the curvature of the sled improves retention of a case coupled with the sled, as the force retaining the case in the sled is concentrated at the four corners of the sled (hard stops **16***a* and **16***b*, and supporting elements **30***a* and **30***b*). The curvature of the sled also improves shock resistance of the sled, as it allows the sled to flex if dropped or struck. The strap **215** associated with the sled and locking mechanism as shown in FIG. **7**R can encompass any of the embodiments described above. FIG. **7**S provides a front view of the sled of FIG. **7**R, including front surface **10***a*, hard stops **16***a* and **16***b*, supporting elements **30***a* and **30***b*, clasping element **14**, clasp retaining elements **14***o* and **14***p*, and locking element **15**. FIG. **7**T provides a perspective view of the sled of FIG. **7**R and a case or housing **100** partially contained in the sled at supporting elements **30***a* and **30***b*, and includes strap **215**.

In some embodiments, part of the back surface of the sled contains a sensor, such as a galvanic sensor, that is in communication with posts that correspond with the connectors in the case (see, for example, supra and FIG. **18**A). When the case containing the device is installed in the sled, software in the device can be used to detect signals received from the sensor. When used in conjunction with the sled, the case, and the mobile device, the sensor can be used to detect the blood pressure, pulse rate, temperature, carbon dioxide levels, or hemoglobin saturation of the user. In some embodiments, the sensor may be in communication with the sled, either with wires or wirelessly, but is not attached to the sled; for example, the sensor may be attached to another armband or chestband. A microcontroller may be attached to the band, or to the sled, to allow processing of data sent to and/or from the sensor.

FIG. **8** provides various perspective views of a float for use to house an electronic device and/or a housing or case for the same. The float disclosed herein may also be used to house an electronic device attached to sleds disclosed herein. Accordingly, the float is of a size and dimension so as to receive an electronic device or a housing for said device, and is further configured for protecting the device from shocks, such as from falls, and for protecting the device from sinking when subjected to a body of water. Consequently, the float is composed of a material that is capable of floating when subjected to a body of water. Hence, the float may be of any suitable size and dimension, such as a size to fit over a mobile phone, such as an Apple iPhone®, or a case therefore, or it may be sized to fit a tablet PC, such as an Apple iPad®, or a case therefore. For instance, in certain embodiments, the float may be configured for receiving therein a housing, which housing houses a mobile electronic device, such as a mobile telephone, and in such an instance, the float may have a width that ranges from about 40 mm to about 250 mm, such as from about 100 mm to about 200 mm, for instance, from about 150 mm to about 200 mm, including about 88 mm in width, and may have a length that ranges from about 50 mm to about 300 mm, such as from about 100 mm to about 250 mm, including from about 150 mm to about 200 mm, such as about 175 mm in length, and may have a thickness that ranges from about 5 mm to about 100 mm, such as from about 10 mm to about 50 mm, including from about 20 mm to about 40 mm, such as about 30 mm thick. In other instances, the float may be configured for receiving therein a housing, which housing houses a tablet computing device, such as a tablet PC or an electronic reader, and in such an instance, the float may have an exterior width that ranges from about 50 mm to about 500 mm, such as from about 100 mm to about 450 mm, including from about 150 mm to about 400 mm, such as from about 200 mm to about 350 mm, including from about 250 mm to about 300 mm, including about 242 mm in width, and may have an exterior length that ranges from about 50 mm to about 600 mm, such as from about 100 mm to about 550 mm, including from about 150 mm to about 500 mm, such as from about 200 mm to about 450 mm, including from about 250 mm to about 400 mm, for instance, from about 300 mm to about 350 mm in length, and may have an exterior thickness that ranges from about 5 mm to about 50 mm, such as from about 10 mm to about 45 mm, including from about 15 mm to about 40 mm, such as from about 20 mm to about 35 mm, including from about 25 mm to about 30 mm, including about 38 mm in thickness. It is understood that the float's interior dimensions will vary with the dimensions of the electronic device or housing therefore that is configured for being received within the float, and hence, both the exterior and interior dimensions will vary accordingly. The preceding description is not meant to be unduly limiting.

For instance, the interior dimensions of a float of the disclosure, such as for receiving a mobile telephone housing therein, may vary, and in certain instances may have an interior width that ranges from about 30 mm to about 225 mm, such as from about 40 mm to about 150 mm, for instance, from about 50 mm to about 100 mm, including about 66 mm in width, and may have an interior length that ranges from about 40 mm to about 250 mm, such as from about 60 mm to about 200 mm, including from about 75 mm to about 200 mm, such as from about 100 mm to about 150 mm, including about 131 mm in length, and may have an interior thickness that ranges from about 5 mm to about 75 mm, such as from about 10 mm to about 50 mm, including from about 15 mm to about 30 mm, such as about 20 mm thick. Additionally the interior dimensions of a float of the disclosure, such as for receiving a tablet computer housing therein, may vary, and in certain instances may have an interior width that ranges from about 25 mm to about 450 mm, such as from about 75 mm to about 400 mm, including from about 100 mm to about 350 mm, such as from about 150 mm to about 300 mm, including from about 200 mm to about 250 mm, including about 210 mm in width, and may have an interior length that ranges from about 30 mm to about 550 mm, such as from about 50 mm to about 500 mm, including from about 100 mm to about 450 mm, such as from about 150 mm to about 400 mm, including from about 200 mm to about 350 mm, for instance, from about 250 mm to about 300 mm, including about 266 mm in length, and may have an interior thickness that ranges from about 5 mm to about 45 mm, such as from about 10 mm to about 40 mm, including from about 15 mm to about 35 mm, such as from about 20 mm to about 30 mm, including from about 22 mm to about 25 mm in thickness. In certain embodiments, the thickness of a wall of the float may be from about 5 mm to about 50 mm, such as from about 10 mm to about 40 mm, including

from about 15 mm to about 35 mm, for instance, from about 20 mm to about 30 mm, including about 25 mm for a proximal, distal, side walls, and/or a bottom wall.

FIG. **8**A provides a view of a float **70** of the disclosure wherein the float is coupled with a lanyard **75** which lanyard is configured for allowing the float **70** to easily be carried such as by being strung about a users head, neck, wrist, waist, or other object. Like the sled **1**, the float **70** includes an elongated member having a perimeter portion, wherein the perimeter portion includes perimeter walls. The float **70** further includes a cavity defined by the perimeter walls into which cavity an electronic device or a housing therefore may be inserted. The float **70** includes four corners, and each of the corners may include a structural feature **71** that serves one or more functions. As depicted the structural features **71***a*-**71***d* function to give structural support to the corners of the float **70**, as well as to provide an element by which the float **70** to be connected to a carrying mechanism **75**, such as a lanyard.

As depicted in FIG. **8**A, the lanyard **75** includes an elongated body ending in two opposing connector interfaces **75***a*, which interfaces are coupled to a connector **75***b* that is configured for engaging a portion of the float **70** or a portion thereof. As depicted the connectors **75***b* are configured for engaging a hook portion of a support member **72**, which support members are positioned at the proximal corner hook receiving portions **74***a* and **74***b*.

In this implementation, the supports **71***a*-**71***d* are positioned at each corner and are configured for engaging an interior corner portion and passing through the interior corner portion to the exterior corner portion and forming a receptacle at the exterior corner so as to be capable of being coupled to a carrying mechanism so as to be carried thereby. As depicted four supports **71***a*-**71***d* are provided at each of the corners thereby allowing the carrying device **75** to be connected to any of the corners and consequently allowing the housed device to be carried in a variety of orientations, e.g., horizontally and/or vertically. The corners, therefore, are configured for receiving a hook element portion of the support member, and consequently the corners include indented receiving portions **74***a*-**74***d*. In various instances, three, or two, or even just one corner may be coupled to a support element **71**, or the support member may be positioned not in a corner but at one or more sides, and/or the support member **71** will have a different configuration then provided herein so long as it is capable of supporting a side or a corner of the float and/or allowing for a carrying device to be connected thereto for carrying the float.

The float also includes several apertures, such as along its perimeter and/or its elongated surface. For instance, there may be one or a plurality of apertures positioned along its perimeter portion and/or one or more apertures on its elongated surface member. For example, exemplified in FIG. **8**B, there are two apertures **72***a* and **72***b* positioned on its proximal portion, e.g., so as to align with an earphone jack port and/or on on/off button of an underlying housed device thereby allowing access thereto, and there are two apertures **72***c* and **72***d* positioned on its distal portion, e.g., so as to align with a microphone and/or speaker portion of an underlying housed device. There is also an aperture **72***e* on one of its side portions, e.g., so as to align with a volume control and/or silence toggle, as well as an aperture **76** positioned on its elongated member, e.g., so as to align with a camera feature of an underlying housed device. Also depicted are support apertures **74***c* and **74***d* that receive the hook portion of the support members **72***c* and **72***d*.

FIG. **8**C provides a distal portion of the float **70** wherein the lanyard connectors **75***b* are configured for engaging the hook portion of the support members **71***c* and **71***d*, which support members are positioned at the distal corner hook receiving portions **74***c* and **74***d*. FIG. **8**D provides a distal corner of the float of FIG. **8**C showing in detail the hook element portion of the support member **71***c* as well as its attachment to the lanyard connector **75***b*. FIG. **8**E provides a front view of an alternative embodiment of a float **70**, including aperture **76**. The aperture for the camera of the underlying portable electronic device can be any shape that allows for operation of the camera but does not interfere with the buoyant properties of the float.

FIGS. **9**A-**9**G provides various perspective views of a mount adapter **80** for use in conjunction with a sled **1** of our disclosure. The mount adaptor **80** is configured on one end so as to be coupled with a sled **1** of the disclosure, such as via association with an attachment aperture **20** of the sled **1**, and on the other end the mount adapter **80** is configured so as to be coupled to a mounting system, such as the one described herein. The mount adapter **80** may have any suitable configuration so long it is capable of coupling to a sled **1** of the disclosure and then coupling the sled **1** with one or more other tertiary mounting members.

As can be seen with respect to FIG. **9**A, in this embodiment, the mount adapter **80** is configured for being associated with the sled **1** via coupling with the attachment aperture **20**. For instance, the mount adapter **80** includes a base member having a top surface **80***a* and a bottom surface **80***b*, wherein the bottom surface **80***b* of the mount adapter base **80** is configured for being associated with the sled **1** via the attachment aperture **20**. The base member **80** further includes sled attachment edge rails **81***a* and **81***b*, such as on the perimeter portion of the bottom surface **80***b* of the base member **80**, which are configured for engaging a perimeter edge portion of the sled **1** to which the mount adapter **80** is to be attached. The base member **80** may have any suitable configuration so long as it is capable of associating the mount adapter **80** with the sled **1**.

Accordingly, in this embodiment, the base member **80** includes attachment edge rails **81***a* and **81***b* that are configured for engaging the edges **12***a* and **12***b* of the sled **1** in a manner such that the rails **81***a* and **81***b* wrap at least partially around the edges **12***a* and **12***b* so as to further prevent the mount adapter attachment base **80** from rotating with respect to the sled **1**. The mount adapter attachment base **80** need not move with respect to the sled **1** because it includes a mount adapter element **83**, which mount adapter element **83** is configured for interfacing with a suitable mount element in a moveable engagement.

Accordingly, although the moveable engagement of the mount adapter element **83** with the mount element may be configured in any suitable form so long as the engagement allows for the coupling of the sled **1** with the mount element, such as in a moveable engagement, in this embodiment, the engagement is accomplished via hinge element **84**. Specifically, the adapter base **80** includes a projection **83**, e.g., a mount adapter element, which projection includes on its distal portion a mount engagement member **84** that in this embodiment is configured as a hinge member. The hinge member **84** may include one or more prong elements, which in this instance includes two prong elements **84***a* and **84***b*, however it is understood that one, two, three, or more prong elements could be included.

Further, as can be seen with respect to FIG. **9**A, the adapter base member **80** includes an aperture **86***a*, which aperture **86***a* is configured for receiving a bolt member **86***b*, e.g., a screw, a rivet, or other attachment mechanism, there through, which bolt member **86***b* may be employed to attach the adapter base member **80** to the sled **1**, such as at the attachment aperture **20**,

which aperture **20** in this instance is a corresponding aperture sized to snuggly receive the bolt member **86***b* there through.

It is to be understood, however, that this attachment configuration may be configured in any suitable manner. For instance, although the descriptions herein provide an exemplified manner in which the adapter base member **80** is coupled to the sled **1** via corresponding attachment apertures **20** and **86***a* by a suitable bolt member **86***b*, the particular coupling mechanism employed may differ from that set forth herein in many various suitable manners. For example, in various instances, the adapter base member **80** may be coupled to a sled **1** through a corresponding snap interface, as depicted with reference to FIG. **4**G, a corresponding clip interface, corresponding hinge interfaces, a snap interface, an adhesive interface, a hook and loop interface, a bolt or rivet interface, a slide and catch interface, and the like. Specifically, in certain instances, instead of having a bolt-receiving interface **86**, the adapter base member **80** may include a snap-tooth interface **25**, as depicted in FIG. **4**B, which snap-tooth interface may include one or a plurality of snap-teeth, each of which snap-teeth may includes an attachment ledge interface that is configured for being coupled to an attachment ledge, e.g., **20***c*, of an attachment member **20**.

FIG. **9**B provides a perspective view of a back surface **80***b* of the mount adapter **80**. The adapter base member **80** includes an aperture bolt retaining member **87***a*, which retaining member forms a boundary around a bolt receiving aperture **86***a*. As indicated above, the aperture **86***a* is configured for receiving a bolt member **86***b*, e.g., a screw, a rivet, or other attachment mechanism, there through. The mount adapter **80** includes a projection **83** that is configured as a mount adapter element that is configured as a hinge member **84**. The hinge member **84** includes two prong elements **84***a* and **84***b*, which hinge prong elements **84***a* and **84***b* define a hinge receiving aperture **85***a* that is configured for receiving corresponding hinge prong elements from a mounting member. The mount adapter element **83** also includes an aperture **85***b*, such as a pin receiving aperture that is configured for receiving a connection element, such as a pin, which pin may be inserted through the corresponding hinge apertures of the mount adapter member and mounting member so as to couple the two together in a moveable alignment. Also depicted are attachment edge rails **81***a* and **81***b*.

FIG. **9**C provides a perspective view of the mount adapter **80** attached to a sled **1** of the disclosure. The front surface **80***a* of the mount adapter **80** is contacted with a back surface **10***b* of the sled **1**. The bolt receiving aperture **86***a* of the adapter is aligned with the attachment aperture **20** of the sled and a connector **86***b*, e.g., a bolt, is inserted there through so as to couple the sled and adapter together. A connector retaining element **87***b*, e.g., a nut, is then positioned in the connector retaining member **87***a* and the nut is applied to the bolt so as to secure the coupling of the sled **1** with the adapter. In this embodiment, this connection is a fixed connection, wherein the adapter is fixed to the sled in a non-moveable coupling. However, in other instances, such as that provided with respect to FIG. **9**E-**9**G, the mount adapter may be configured for being coupled to the sled in a moveable manner.

FIG. **9**D provides a perspective view of the front surface **10***a* of the sled **1** of FIG. **9**C with the adapter **80** coupled thereto.

FIG. **9**E provides another embodiment of a mount adapter **90** for use in conjunction with a sled **1** of the disclosure so as to enable the sled **1** to be coupled to a suitable mounting member. In this embodiment, the mount adapter **90** is configured as an elongated member, which elongated member is defined by front and back opposed surfaces that are offset from one another by opposed side surfaces. The elongate member is further defined by a proximal portion and a distal portion, which portions each include a coupling interface **91** and **94**, respectively. The coupling interfaces of the proximal and distal portions of the elongated member may have any suitable configuration so long as they are capable of interfacing in a coupled engagement with the sled **1** and/or with a mounting member or an accessory therefore.

As can be seen with respect to FIG. **9**E, in this embodiment, the proximal and distal coupling portions of the elongated member **90** are configured as hinge interfaces **91** and **94**. The proximal hinge interface **91** in this instance includes three prong members **91***a*, **91***b*, and **91***c* that are separated from one another by a space **92***a*, which space is sized so as to receive corresponding prong members of another mount adapter, sled, or mounting member so as to be coupled therewith. It is to be understood however that less or more than three prong members may be included. The prong members each include a connector, e.g., pin, interface **92***b*, which interface is configured as an aperture through which a connector **93**, e.g., a pin, may be inserted so as to couple the adapter **90** to the other adapter, sled, or mounting member.

The distal hinge interface **94** also includes prong members. In this instance, the distal hinge interface **94** includes two prong members **94***a* and **94***b*, however, it is understood that said interface may include one, two, three, or more prong members dependent upon the desired configuration. The prong members **94***a* and **94***b* are separated from one another by a space **95***a*, which space is sized so as to receive corresponding prong members of another mount adapter, sled, or mounting member so as to be coupled therewith. Accordingly, the prong members each include a connector, e.g., pin, interface **95***b*, which interface is configured as an aperture through which a connector, e.g., a pin, may be inserted so as to couple the adapter **90** to the other adapter, sled, or mounting member.

FIGS. **9**F and **9**G provide a perspective view of the mount adapter **90** of FIG. **9**E coupled to a sled **1**. Specifically, FIG. **9**F provides a perspective view of a mount adapter **90** coupled to a back surface **10***b* of a sled **1** of the disclosure. The connection interface **91** of the proximal portion of the mount adapter **90** is aligned with the aperture **20** of the sled **1** so that the adapter **90** is contacted with a back surface **10***b* of the sled **1**. The sled aperture **20** has a connector, e.g., a pin, such as a screw or bolt or the like, inserted there through, which pin passes through the connector interface **92***a*, e.g., the pin aperture of the prong members **91**. A locking member, e.g., a nut, is further coupled to the connector so as to couple the adapter **90** to the sled **1**. In this embodiment, this connection is not a fixed connection, because the mount adapter **90** may rotate around the bolt or pin member. If a fixed connection is desired, an additional connection member, e.g., a screw may be inserted, such as through the distal interface portion, so as to pass through the sled **1** and thereby lock the alignment of the adapter member **90**. FIG. **9**G provides a perspective view of the front surface **10***a* of the sled **1** of FIG. **9**F with the adapter **90** coupled thereto.

FIG. **10**A provides a perspective view of a mount **107** for the sled **1** using the adapters **80**, **90** shown in FIGS. **9**A-**9**G. The proximal end of the mount **107** includes a hinge region **108** with three hinge regions, **108***a*, **108***b* and **108***c* that interact with one of the hinge regions of the adapters **80** or **90**, joined by a pin **109**. The distal end of the mount includes a base attachment region **110**. The base attachment region includes a left **110***a* and a right slot **110***b* for connecting to a base. It also includes a left **111***a* and right distal hook **111***b* as well as a left **111***c* and right proximal hook **111***d* for remov-

ably connecting to a base. The mount **107** also includes a central region **112** that connects the proximal end of the mount **107** to the base attachment region **110** at the base attachment region connection point **113**. The central region **112** then curves from this attachment point **113** to the hinge region **108**. This curvature reduces the mass of the mount and provides additional flexibility.

FIG. **10**B provides a perspective view the mount **107**. A left **112***a* and a right slot **112***b* are shown in the central region provide flexibility to the mount and reduces the mass of the mount. The central region of the mount **112** attaches to the proximal end of the base attachment region

FIG. **10**C provides a perspective view of a base **114** that attaches to the base attachment region **110** of the mount **107** shown in FIG. **10**B. The base attachment region **110** of the mount **107** shown in FIG. **10**B slides into the right **105***a* and left slots **105***b* shown on either side of the mount attachment region **118** of the base **114** shown in FIG. **10**C. The center protrusion **116** shown in mount attachment region **118** of the base **114** of FIG. **10**C holds the mount **107** from FIG. **10**B in place when it is slid under the right **115***a* and left slots **115***b* on the base **114**.

FIG. **10**D provides a perspective view of the mount **107** of FIG. **10**B attached to the base **114** of FIG. **10**C. The base attachment region **110** of the mount **107** is slid into the mount attachment region **118** of the base **114**. The right slot **115***a* of the base **114** is shown interacting with the right slot **110***a* of the mount **107**. The right slot **115***a* of the base **114** covers the right slot **110***a* of the mount **107**, so it cannot be seen in this perspective. In this configuration, the sled **1** can be attached to the hinges shown on the mount using the adapters **80**, **90** shown in FIGS. **9**A-**9**G. The base can be attached to an article or structure. For example, the article or structure could be a helmet, skateboard, surfboard, hat, lanyard or wall.

FIG. **10**E provides a perspective view of the mounts shown in FIG. **10**D and FIG. **9**G. The mount attached to the sled **1** protrudes two hinges **94***a* and **94***b* that interlock with the hinges **108***a*, **108***b* and **108***c*. The pin **109** is inserted through the hole made when these hinges properly interlock. A mount tensioning member **116** allows for tension to be applied to the hinges across the length of the pin. This holds the sled **1** in place in relation to the mount **107** and base **114**.

FIG. **10**F provides a side perspective view of the mount **107** attached to the base **114** as well as the mount adapter **90** shown in FIG. **9**E. The use of the mount **107** and mount adapter **90** together allows the sled **1** to be articulated in relation to the base **114** at two points, providing additional flexibility to the positioning of the sled **1**. FIG. **10**G provides a perspective view of the mount **107** and mount adapter **90** shown in FIG. **10**F and FIG. **9**E joined to the sled **1** and the base **114** of FIG. **10**C. The hinge interfaces **91***a*, **91***b* and **91***c* interlock with the hinge interfaces of **94***a* and **94***b*. These form a channel that the pin **93** passes through. The assembly further includes a mount tensioning member **117** analogous to the pin tightener described above for FIG. **10**E.

FIG. **11**A provides a perspective view of the mount **107** and mount adapter **90** attached to a suction cup base **125**. In the embodiment shown, two mounts are used with the sled as shown in FIG. **10**G. The mount **107** shown in FIG. **10**G is then attached to the suction cup base **125** instead of the base shown in FIG. **10**G. The suction cup base **125** can be adjusted using the mount tensioning member **119** and/or the arm hinge tensioning member **121**. Thus, the orientation of the mount with respect to the suction cup **122***b* can be adjusted at two points on the suction cup base **125**. Vacuum is created within the suction cup **122***b* by manipulating the vacuum arm **122***c* on the top casing of the suction cup **122***a*. The vacuum can be release by pressing the vacuum release button **122***d*. FIG. **11**B shows the suction cup base **125** and mounts from a different perspective with the sled **1** attached to the mount adaptor **90**.

FIG. **11**C shows a perspective view of a different embodiment of a base with a suction cup bottom **97**. This base has a ball mount **98** for interacting with the tensioning member **68** described in FIG. **6**E. This mounting system allows for the sled **1** to be articulated at the position that the tensioning member **68** interacts with the ball mount **98**, but also at the ball mount hinge **99***a*, tightened by the ball mount hinge tensioning member **99***b*. Thus, a sled **1** positioned on the ball mount **98** would be able to rotate and bend via its interaction via the tensioning member **68**. Also, the ball mount **98** itself can articulate from side via its ball mount hinge **99***a*. Further, the arm hinge **99***c* allows the entire arm comprising the ball mount hinge **99***a* and ball mount hinge tensioning member **99***b* to articulate along another axis, via manipulation of the arm hinge tensioning member **99***d*.

Vacuum is created within the suction cup **100***d* by manipulating the vacuum arm **100***b* on top casing of the suction cup **100***c*. The vacuum can be release by pressing the vacuum release button **100***a*.

FIG. **11**D shows a perspective view of the ball mount **98**, as well as its ball mount hinge **99***a* and ball joint hinge tensioning member. FIG. **11**E shows a view of the bottom of the suction cup base **97**. This view shows the suction cup **100***d* as well as the vacuum release tab **100***e*. After the vacuum arm **100***b* and vacuum release button **100***a* have been manipulated, the vacuum release tab can be pulled to release the vacuum and remove the suction cup base **97** from a surface.

FIG. **11**F shows a perspective view of the suction cup base **97** attached to a sled **1** via its tensioning member **68** at the ball mount. This allows for the sled **1** to be rotated and articulated in any direction and removes the necessity of two or more mounts as described in FIG. **11**B. However, the mounts and sled described herein are compatible with either the hinged or ball joint mechanism.

FIG. **11**G shows a perspective view of an alternative embodiment of a sled attached to a suction cup base. Similar embodiments of the sled are also shown in FIGS. **1**D-**1**H and similar embodiments of the clasping element **14** and the locking element **15** are shown in FIGS. **2**H-**2**M. The sled includes a clasping element **14** and locking element **15** held between clasp retaining elements **14***o* and **14***p*. The sled also includes hard stops **16***a* and **16***b*, supporting elements **30***a* and **30***b*, cutout portion **32***b* (cutout portion **32***a* not shown), and supporting element cutouts **30***c* and **30***d*. The suction cup base is attached to the sled at elongated member **10**, the suction cup base including a tensioning member **68**, an suction cup arm **120** attached to a ball mount (not shown), an arm hinge tensioning member **121** that allows adjustment of the orientation of the suction cup arm **120**. FIG. **11**H provides a perspective view of an alternative configuration of the sled attached to a suction cup base of FIG. **11**G, in which the sled is rotated horizontally on the ball mount (not shown) relative to the suction cup arm **120**.

FIG. **12**A is a perspective view of a broad base **123** similar to the one described in FIG. **10**C. However, the broad base **123** of FIG. **12**A has a larger surface area to contact an article or structure. This surface area is made up of a skirt region **124** around the mount attachment region **118**. For example, the article or structure could be a helmet, skateboard, surfboard, hat, lanyard or wall. This larger surface area allows greater stability for the base when it is attached to an article or structure. The cut out **126** on the broad base **123** allows for easier removal of the broad base **123** from an article or structure after it has been adhered to an article or structure.

FIG. **12**B shows the broad base **123** of FIG. **12**A with the mount **107** shown in FIG. **10**B attached. FIG. **12**C shows the sled **1** attached to the same mount **107** and broad base **123**. In other embodiments, the mount could include the ball mount **98** shown in FIGS. **11**C-F.

FIG. **13**A shows a sled **1**, mount tensioning member **116**, and mounting system for a tube **135**, for example, a tube on the frame of a bicycle. The mounting system for a tube **135** allows the tube to pass through its central cavity **134**. The tightening screws **129***a* and **129***b* are then adjusted to decrease the size of the central cavity **134** to fit the tube. The hinge mount **131** found on the mounting system for a tube **135** can then interact with the sled like the mounts shown in FIGS. **11**A-B. FIG. **13**B shows the mounting system assembled with the sled **1**. In other embodiments, the mount could include the ball mount **98** shown in FIGS. **11**C-F.

FIG. **14**A shows a harness system **136** for mounting the sled **1** on a human body. The harness system **136** is attached to a mounting system **137** that is positioned on the body of the wearer. The mount **107** on the mounting system **137** is the same mount shown in FIG. **10**B and can be positioned on the mounting system using a similar mount attachment region **118**. However the mount could include the ball mount **98** shown in FIGS. **11**C-F. FIG. **14**B shows the same mounting system **136** with a sled **1** attached. FIG. **14**C shows the mounting system as it would be arranged as worn by a person from the front. FIG. **14**C shows how the strap system **138** is applied to a person. The right **138***a* and left shoulder straps **138***b* pass over the shoulders of the subject and attach to the top end of the mounting system. The right **138***d* and left waist straps **138***c*. The size of the straps in the strap system **138** can be adjusted using the adjustor **139** shown on the left waist strap. In other embodiments, it could be on any of the straps. FIG. **14**D provides a back view. The right **138***a* and left shoulder straps **138***b* meet at the shoulder strap connector **141**. The right **138***d* and left waist straps **138***c* meet at the waist strap connector **142**. The back strap **138***e* connects the shoulder strap connector **141** and the waist strap connector **142**. The strap system can be one as shown in FIGS. **14**A-D or the strap system shown in FIGS. **7**E-**7**Q could also be used.

FIG. **15**A shows a head harness system **143** for mounting the sled **1** to a human head. The head strap system **144** is attached to a mounting system **145** that is positioned on the head of the wearer. The mount **107** on the mounting system **145** is the same mount shown in FIG. **10**B, however the mount could include the ball mount **98** shown in FIGS. **11**C-F. The sled **1** is also shown in FIG. **15**A. FIG. **15**B shows the same head harness system **143** with the sled **1** attached. FIG. **15**C shows the head harness system **143** as it would be arranged as worn by a person from the front. The left strap **144***a*, right strap **144***b* and top strap all contact the mounting system and pass to the back of the head of the wearer. FIG. **15**D provides a view of the mounting system **143** with the sled **1** attached as worn by a person. The strap system **144** can be one as shown in FIGS. **14**A-C or the strap system shown in FIGS. **7**E-**7**Q could also be used.

FIG. **16**A provides a front proximal perspective view of a case with a charging system **146** that allows an electronic device contained within the case **146** without opening the case **146**. The four connectors **147***a*, **147***b*, **147***c* and **147***d* at the bottom of the case **146** are electrically joined to the electronic device within the case **146**. Two of the connectors are electrically + and – leads, while the other two connectors send and receive data. This arrangement of connectors is exemplary. Any arrangement could be used that allowed the electronic device to be charged without opening the case. FIG. **16**B provides a front distal perspective view of the same case **146**. FIG. **16**C provides a rear proximal view of the same case **146**. FIG. **16**D provides a rear distal view of the same case. FIG. **16**E provides a rear proximal view of the same case **146**. FIG. **16**F provides another rear proximal view of the same case.

FIG. **17**A shows a front proximal view of the same case **146**. Here, the proximal door **148** of the case **146** has been removed, showing the 30 pin connector **149** that interfaces with the electronic device to provide power and data syncing. The proximal aperture **150** of the case **146** is also shown. The proximal aperture **150** has a 30 pin socket **153** for insertion of the 30 pin connector **149**. According to certain embodiments, the proximal aperture interacts with the proximal door **148** to create a water tight seal. Tabs on the front **151** and rear **152** sides of the case **146** allow the proximal door **148** to be attached securely to the case **146**.

FIG. **17**B shows the opposite perspective of the proximal door **148** of the case **146**. The connection between the four connectors **147***a*, **147***b*, **147***c* and **147***d* that pass through the proximal wall **155** of the proximal door **148** and the 30 pin connector **149** are shown. The wires connecting the four connectors **154***a*, **154***b*, **154***c* and **154***d* with the 30 pin connector **149** are exaggerated in size to show the connection.

FIG. **17**C shows the same perspective with the four connectors **147***a*, **147***b*, **147***c* and **147***d* hidden behind a circuit board **156** and the wires **154***a*, **154***b*, **154***c* and **154***d* connecting the circuit board **156** and four connectors **147***a*, **147***b*, **147***c* and **147***d* with the 30 pin connector **149** are hidden behind the 30 pin connector **149**. FIG. **17**D provides a side perspective of the proximal door **148** of the case **146**. The proximal door **148** has a U-shaped design. The front **157** and rear walls **158** of the proximal door **148** contain tabs **157***a* and **158***a* that allow the proximal door **148** to attach to the front **151** and rear **152** sides of the proximal aperture **150** and thereby attach to the case **146**. These tabs **157***a* and **158***a* interact with the front **151** and rear walls **152** of the proximal opening **150** to create tension, holding the proximal door **148** in place when it is inserted into the proximal opening **150** in the case **146**.

FIG. **17**E provides a view of the proximal opening of the case **146** as well as a side view of the proximal door **148**. FIG. **17**F shows outside and inside perspectives of the proximal door **148**. FIG. **17**G shows the proximal door **148** being inserted into the proximal opening **150** of the case **146**. FIG. **17**H is a side view of the proximal door being inserted into the proximal opening of the case. The tabs **157***a* and **158***a* in the front **157** and rear walls **158** of the proximal door **148** are shown.

In some embodiments of the case, the proximal door is detachable from the case, and may or may not remain connected to the case by a tether. In some embodiments, the proximal door is attached to the case by a hinge. The proximal door may be chamfered in order to guide the door into the case and allow the interface connector (e.g. a 30 pin connector) attached to the proximal door to contact a port for a device in the case. A gasket may be affixed to either the proximal aperture or the proximal door to aid in creating a water tight seal. The circuit board in the proximal door may also aid in creating a water tight seal.

In some embodiments of the case, only two connectors may be used, for example as electrical + and – leads, or as connectors to send and receive data. In some embodiments, more than four connectors may be used. The connectors may be able to transmit digital, analog, or optical signal data, such as audio, video, control signals, security signals, biometric data, and the like. In some embodiments, the connectors may be able to transmit fluids, such as gas or liquid as part of

supplying power from a fuel cell. The connectors may be proud, recessed, or flush with the edge of the case. The connectors may be tensioned or sprung.

The interface connector may be, for example, a 30 pin connector, a USB connector (standard, mini, or micro), a Lightning connector, or a DisplayPort connector (standard or mini). The connectors that pass through the proximal door are sealed to prevent liquid from passing through the proximal door. The connectors that pass through the proximal door may be constructed from any suitable material that can transmit a signal, such as beryllium copper. Preferably, the connectors are resistant to corrosion, and may be coated in a corrosion resistant substance, such as gold or gold alloy.

In some embodiments the proximal door may also contain an integrated circuit (IC) in communication with the interface connector. The IC may be an authentication IC that allows one or more software applications on the device to confirm that the case is in use with the device. The authentication IC may also confirm that the case is not a counterfeit. In some embodiments, an authentication IC is housed within the interface connector. In some embodiments, the authentication IC is housed in a sled, such as the sled shown in FIGS. **18**A-C and described infra.

In some embodiments, the proximal door may also contain a sensor to ensure that a signal or electrical power only passes through when the case containing the device is actually docked. The sensor may have a transmitter, a receiver, or both a transmitter and receiver and communicates with the circuit board in the proximal door. The sensor may be any sensor suitable for detecting docking, such as an optical sensor, magnetic sensor, pressure sensor or voltage sensor. In some embodiments, a radio frequency identification chip (RFID chip) may be attached to the proximal door. The RFID chip may passive, active, or battery-assisted passive. The device inside the case, or another device, may be able to interrogate the RFID chip and receive radio signals transmitted therefrom. If the proximal door is detached from the case, the device in the case, or another device, may be able to detect the RFID chip in the proximal door when it is within the interrogation zone of the RFID chip, regardless of whether the proximal door is clearly visible to the user. In some embodiments, a sensor or RFID chip is housed in a sled, such as that shown in FIGS. **18**A-C and described infra.

FIG. **18**A provides a front perspective of a sled **1** that has been fitted with a charging system for an electronic device held inside the case **146** described in FIGS. **17**A-**17**H or a case with similar power transmission mechanism in its proximal region. At the proximal end **162** of the sled **1** are four electronic posts **159** that correspond with four connectors in the proximal door **148** of a case for an electronic device. These posts **159** could be arranged to fit with any arrangement of connectors on the proximal door **148** or proximal end of a case. The four posts **159** are connected to a 12V car plug **161** by a wire **160**. However, any plug to a power source could be used. A two prong or three prong plug for any wall socket could be used. Also, any data/power plugs that interact with a computer including USB and FireWire plugs could also be used.

FIG. **18**B shows the same sled **1** shown in FIG. **18**A mounted on a suction cup base **163** via a ball mount. The suction cup base **163** is attached to the sled via a ball mount held within a tensioning element **68** attached to the sled **1**. The suction cup base includes a suction cup **163***c* in which a vacuum is created using the vacuum lever **163***a*. The cup body **163***b* provides stability for the suction cup base **163** on the suction cup **163***c*. The suction cup tab **163***d* allows for easier removal of the suction cup **163***c* upon release of the vacuum lever **163***a*.

FIG. **18**C shows the same sled **1** and suction cup base **163** from the opposite side. FIG. **18**D shows the same sled with a suction mount from the bottom. From this perspective, the ball joint **164** can be seen within the ball attachment member receiving receptacle **62** surrounded by the tensioning member **68**. This perspective also provides a view of a 30 pin socket **165** for powering and providing data connection to the four posts. This sled could be used with any mount, including those shown in FIGS. **11**A-**11**F.

FIG. **19**A shows a magnified view of the four posts **159** on the proximal end **162** of the sled **1** that interact with four connectors on the proximal end of a case. The posts are held inside the proximal corners of the sled **1**. FIG. **19**B shows the back proximal end of the sled. This end has a socket for a 30 pin connector **165** to connect the four posts **159** to power and/or data. Also shown is a 30 pin connector **166** that could connect via the wire to a plug for transmission of power or data. FIG. **19**C shows a 30 pin connector **166** being inserted into the socket **165** on the proximal rear end **162** of the sled **1**. Also shown is the tensioner **68** surrounding the ball joint **164**. FIG. **19**D shows a magnified view of the four posts **159** on the sled **1** that interact with the four connectors **147***a*, **147***b*, **147***c* and **147***d* on the proximal door **148** of the case **146**. FIG. **19**E provides a front proximal perspective view of a case **146** with a charging system that allows an electronic device contained within the case without opening the case. FIG. **19**F shows the same view as FIG. **19**B without the 30 pin connector plug.

FIG. **20**A shows the sled **1** with the four posts **159** and the case **146** with the four connectors **147***a*, **147***b*, **147***c* and **147***d* on its proximal door **148**. The suction cup base **163** is also shown. FIG. **20**B shows how the case **146** fits into the sled **1**.

FIG. **21**A shows an embodiment, where the proximal door **148** is directly connected to a source of power/data transmission via a wire **165**. In this embodiment, the inner walls **157** and **158** of the door have triangular tabs **157***b* and **158***b* on them that assist the proximal door **148** in attaching to the proximal opening **150** on the case **146**. FIG. **21**B is a side view of the same proximal door **148**. The proximal door **148** is the same as described above, except that the four connectors are replaced with a plug directly wired **165** to a power source or data transmission source. In certain embodiments, an O-ring is placed around the inner door plug **166** from which the 30 pin connector **149** extends. This O-ring enhances the waterproof aspect of the case. Also shown are the triangular tabs in the front **157***b* and rear walls **158***b* of the proximal door **148**. The front wall tab **157***a* is also present. FIG. **21**C is a perspective view of the proximal door.

FIG. **21**D provides a side perspective of a USB connector **167**. In certain embodiments, this USB connector **167** is used to connect the wire **165** integrated into the proximal door **148** to a computer or plug for access to a power or data source. FIG. **21**E provides a proximal side view of the proximal door **148**. In this embodiment, the triangular tabs **157***b* and **158***b* are absent on the front **157** and rear **158** sides of the proximal door **148**. In this embodiment, the tabs **157** and **158***a* shown on the front **157** and rear **158** sides of the proximal door **148** hold the door in place when it is inserted into the proximal aperture **150** of the case **146**. FIG. **21**F provides a rear view of the case **146** showing an additional embodiment of the proximal door **148**. In this embodiment, the proximal door **148** is attached to the case **146** by a hinge **167**. FIG. **21**G shows a front view of the back half of the case **168** with the attached proximal door **148** attached via a hinge **167**. This embodiment has the curved tabs **157***a* and **158***a* shown in FIG. **21**E.

FIG. **22**A shows a front view an inductive coil **170** that, in certain embodiments, is installed into the cases **146** described, herein. The inductive coil **170** allows for charging of the electronic device inside the case **146** without opening the case **146**. Indeed, the inductive coil **170** allows for charging of the electronic device without penetrating the case **146** with a wire of any kind The inductive coil **170** is linked to a 30 pin plug **149** via a circuit board **171** and wires **172**. When the inductive coil in the case is in sufficient proximity to a second induction coil connected to a power source, the proximity of the two induction coils forms a transformer and allows a charging voltage to be supplied to the device. In some embodiments, the inductive coil is connected to another type of connector or plug capable of supplying power to the device, such as a USB connector (standard, mini, or micro) or a Lightning connector. The 30 pin connector **149** can be inserted into the electronic device or into an adapter in the case **146** to charge the device from the coil **170**. FIG. **22**B shows a rear view of the same inductive coil **170**. In some embodiments, the connector or plug for supplying power is part of a waterproof proximal door, such as that described supra and in FIGS. **16-17**. In some embodiments, the case lacks a proximal door and the connector for supplying power is attached directly to the case.

FIG. **22**C provides a front detailed view of the wire **172** and 30 pin connector **149**. The 30 pin connector **149** is pointed back toward the inductive coil **170**. Thus, the electronic device can plug into the connector **149** on its proximal end and be laid on top of the coil **170**

FIG. **22**D shows a rear detailed view of another embodiment of the wire **172** and 30 pin connector **149**. In this embodiment, the 30 pin connector **149** projects 90 degrees from the wire **172** perpendicular to the surface of the wire **172** and the inductive coil **170**. This orientation is appropriate for electronic devices with a connector on their rear surface or for interacting with an adapter that plugs directly into the electronic device.

FIG. **22**E provides a proximal rear perspective of the case **146** including an inductive coil **170**. This proximal end of the case has a proximal aperture **150** that has not been covered by a proximal door **148**. FIG. **22**F shows the inductive coil **170** shown in **22**B positioned along the rear portion **168** of a case **146**. The wire **172** extending from the coil **170** enters the proximal aperture **150** at the proximal end of the case **146**. FIG. **22**G provides a rear proximal view of the case **146** with the shape of the inductive coil **170** shown through the surface of the rear portion **168** of the case. The circuit board **171** at the proximal end of the wire **172** extends from the inductive coil **170** to the proximal aperture **150**. FIG. **22**H provides a proximal view of the case **146** showing the interior of the proximal aperture **150** and the circuit board **173** within. Again, the inductive coil **170** is shown through the rear surface of the rear portion **168** of the case **146**. FIG. **22**I is a front view of the proximal end of the rear portion **168** of the case **146**. Here, the circuit board **171** is shown while the inductive coil **170** is hidden, embedded in the rear wall of the rear portion **168** of the case **146**. The proximal door **148** is configured with a hinge **167** and is shown closed. FIG. **22**J provides a perspective view of the rear portion **168** of the case **146** with the inductive coil **170** embedded in the rear wall of the rear portion **168** of the case **146**. The proximal door **148** is shown configured with a hinge **167** and open. In some embodiments, the proximal door is not connected to the case, or is linked to the case via a tether. The circuit board **171** is connected to the door **148** by a wire **172**. FIG. **22**K shows the rear view of the case. The inductive coil and associated circuitry is embedded inside the wall of the case **146**.

FIG. **22**L shows a charger **174** that is associated with the inductive coil embodiment of the case **146**. The charger **174** is shaped to hold the case **146** over a second induction coil **175** that energizes the inductive coil **170**. The second induction coil receives electrical power from a power source, such as a battery, generator, or from a wall socket. The wire **176** at the distal end of the charger **174** is connected to a power source, and is electrically connected with the second induction coil. FIG. **22**M shows the case **146** with an inductive coil **170** containing an electronic device interacting with the inductive charger **174**. Note that the case **146** does not have to directly contact the inductive charger **174** in order for power to flow to the inductive coil **170** and thus to the electronic device. In certain embodiments, the inductive charger **174** is shaped so that the case **146** can be laid down into it, but the charger **174** could also be flat with the case **146** laid on top of it in any orientation, such as the perpendicular orientation shown in FIG. **22**M. The induction coil in the case and the second induction coil in the inductive charger merely need to be in sufficient proximity and alignment to allow the two coils to interact electromagnetically and allow power transfer between them. In some embodiments, the inductive charger is sealed in a manner to prevent liquid, such as water, from entering the inductive charger. In some embodiments, the inductive charger allows charging of a device inside a case when exposed to a liquid, such as water.

FIG. **23**A shows a sled **1** with a 30 pin connector **177** associated with it. This 30 pin connector **177** can plug directly to an electronic device contained within a case **146** that has a proximal door **148** that allows direct access to the device. FIG. **23**B shows a similar sled **1**, wherein instead of a 30 pin connector **177**, the sled **1** includes a four post device **178** that can interact with the four connector embodiment of the case **146**.

FIG. **23**C shows a socket for a 30 pin connector for receiving a 30 pin insertion portion there within for the purpose of charging and/or transmitting data when coupled to both an electronic device and a 30 pin connector power cord/data transfer cord. The socket may be positioned any suitable place on the stand, and in this instance is positioned at the proximal rear end. In certain embodiments, the socket is positioned on the proximal rear portion of the sled **1**.

FIG. **23**D shows a front proximal perspective of the rear portion **168** of the case **146** with a proximal door **148** with four pins **181***a*, **181***b*, **181***c*, and **181***d* for interacting with the posts shown in FIG. **23**B. These pins **181***a*, **181***b*, **181***c*, and **181***d* can be in any number or any configuration appropriate for transmitting power and/or data to the electronic device inside the case **146**. The pins in the proximal door **148** communicate electronically to the electronic device via the wires **154***a*, **154***b*, **154***c* and **154***d* and 30 pin connector **149**. The wires **154***a*, **154***b*, **154***c* and **154***d* sizes are exaggerated to show the connection.

FIG. **23**E shows view of the proximal interior of a stand **182** for an electronic device held with the case **146** shown above in FIG. **23**D. The four pins **181***a*, **181***b*, **181***c*, and **181***d* on the proximal door **148** of the case **146** meet with the pins **180***a*, **180***b*, **180***c* and **180***d* at the proximal base **183** of this stand **182**. FIG. **23**F shows a rear view of the stand **182**. A socket for a 30 pin connector **184** is shown in the rear portion of the stand **182** connecting to the four pins **180***a*, **180***b*, **180***c* and **180***d* shown in FIG. **23**E. This form of connection to power and/or data is exemplary. Any connection form can be used to transmit power and/or data to the stand and thereby to the electronic device in the case **146**. This perspective also provides a view of the base **185** of the stand **182**. FIG. **23**G shows the case **146** positioned inside the stand **182** so that the

pins **181***a*, **181***b*, **181***c*, and **181***d* in the proximal door **148** of the case **146** are in contact with the pins **180***a*, **180***b*, **180***c* and **180***d* in the stand **182**. This allows the electronic device inside the case **146** to be charged and/or synced without opening the case **146**. FIG. **23**H is a front view of the case **146** inside the stand **182**.

FIG. **24**A shows a front view of a battery **101***a* that can be used in conjunction with the case described herein to provide a supplemental power source to an electronic device. The battery **101***a* is connected to a circuit board **102** by two wires, a left wire **101***b* and a right wire **101***c*. The connection between the battery and a circuit board can be made using any method known in the art. In certain embodiments, a circuit board is not needed and the battery is connected directly to an electronic device through a wire and/or a connector. Also, shown in a 30 pin connector **103** that connects the battery to a socket on the electronic device. This 30 pin connector **103** can be oriented in any direction that allows easy access for the 30 pin connector **103** to the electronic device. In addition to a 30 pin connector, the connector that connects the battery to a socket on the electronic device may be any suitable connector known in the art, such as a USB connector (standard, mini, micro) or Lightning connector.

FIG. **24**B shows the battery **101***a* from a rear view. The left **101***b* and right **101***c* wires are both shown connecting the battery **101***a* to the circuit board **102**. Also shown on the circuit board is a micro-USB connector **104**. The micro-USB connector **104** is used to provide data access to the electronic device while it is electronically coupled to the battery **101***a*. The micro-USB connector **104** or any other type of connector serving the same function, can be positioned near the proximal end of the circuit board or the battery to allow access to the connector. FIG. **24**C shows the battery **101***a* positioned on the rear portion of a case **105**. The battery **101***a* is positioned on or within the rear portion of the case **105**. The micro-USB connector **104** can be accessed through the proximal door **106** at the proximal end of the case **105**. This way, data can be transmitted to and from the electronic device without disconnecting it from the battery **101***a*. In certain embodiments, the micro-USB connector **104** is replaced with other connection options, such as other USB configurations or a 30 pin configuration. In certain embodiments, the electronic device and the battery **101***a* can both be charged through connecting through micro-USB connector **104**, or another type of connector to a power source.

The invention also envisions cases, including battery-containing cases (see e.g., FIGS. **24**A-C), which also include a powered flash unit integrated into the rear portion of a case. Depending on the number and position of the electronic digital camera(s) included in the electronic device to be housed inside the case, the flash unit may either serve as the primary or sole flash for the associated camera or as a supplementary flash to a flash unit included in the electronic device.

Preferably, the case-mounted flash will be synchronized with the digital camera with which it is associated when the device is housed within the case. In many embodiments this accomplished using a preferably programmable electronic timing circuit, which can either be in the device or in the case. When the timing circuit is in the device, the case-mounted flash of the invention is in electrical communication with device so that it can be triggered under when necessary. In such embodiments, the interior of the case includes the electronic circuitry and connections required to provide electrical communication and control between the timing circuit and flash unit. When the timing circuit is in the case, the case includes the required electronics.

In other embodiments, there is no electrical connection between the camera and case-mounted flash for purposes of controlling the case-mounted flash. For example, if the device itself includes a flash unit associated with the electronic digital camera, in some embodiments the case-mounted flash unit can be triggered using a case-mounted optical sensor to sense firing of the device's flash. When the case-mounted sensor senses a flash from the master flash of the device, an electronic controller in the case that controls firing of the case-mounted flash triggers the case-mounted flash to fire. Energy for the case-mounted flash can be drawn from the battery of the supplemental power source housed inside the case, although in some embodiments, energy may be drawn from the device's internal power supply. In such embodiments, the case includes circuitry that provides electrical communication between the device's power supply and the case-mounted flash.

FIG. **24**D depicts a representative example of a case that includes a flash unit. In the illustrated embodiment, the case-mounted powered flash unit **190** is integrated into the rear portion of a case **105**. Required electrical connections between the case-mounted flash unit and device are provided on the interior portion of the case (not shown).

FIGS. **25**A-B show an imaging system that a case **200** for an electronic device (not shown) having at least one built-in camera, such as a smart phone (e.g., an iPhone 4S, an iPhone 5, a Galaxy S, etc.) and a detachable lens **210**. The case **200** can include an attachment point or mount **201** for an easily mounted, detachable camera lens **210** in a region of the case **202** that includes an optically clear region **203** that aligns with the device when it is properly positioned in the case. In other embodiments, instead of an optically clear region that aligns with an electronic device when positioned in the case, this region of the case includes a feature (or combination of features), preferably providing a watertight connection, that allow for attachment of any complementary detachable lens. For example, this region of the case may include a threaded port into which a threaded plug having an optically clear window can be inserted. When desired, the plug can be readily removed and replaced by a detachable camera lens having a complementary threaded connection.

The detachable lens **210** can be of any suitable variety, including a fish-eye, wide-angle, telephoto, zoom, or macro lens or assembly of lenses. If desired, the lens **210** can also accommodate one or more optical filters adapted for attachment to the front of the lens, opposite the end of the lens adapted for detachable connection with the case.

The attachment point or mount **201** of the case can include any mechanical or other attachment element, or combinations or grouping of mechanical or other attachment elements, compatible with the complementary mounting feature(s) on the mounting surface **211** of the detachable lens **210**. Such attachment features include threaded or flange-type connectors, as well as magnetic connectors. Also included in the invention are embodiments wherein the connection between the case **200** and detachable lens **210** is waterproof. Preferably, a watertight seal between the case and lens is achieved using a gasket or seal disposed on periphery of the mounting surface of the detachable lens.

FIG. **25**A shows a representative example of a particular mounting system that uses ferromagnetic force to detachably connect the lens to the case. As is known, magnetic force can be used to detachably connect components that each have a magnet, the poles of which are preferably oriented to maximize magnetic attraction between the magnets so as to facilitate and/or stabilize lens attachment to the case. Alternatively, one of the two components (i.e., the detachable lens or the

case) may contain a magnet while the other component contains a ferromagnetic material (e.g., iron, nickel, cobalt, alloys containing such substances, lodestone, and the like). In such embodiments, magnetic force can be used to rapidly, easily, and reversibly attach the detachable lens to the case. If desired, other features, such as one or more complementary alignment pins and holes, ridges, bumps, etc. can be included on the mounting surface **211** of the detachable lens **210** and attachment point or mount **201** of the case to ensure proper alignment of the lens with the case, and ultimately, with a camera disposed on the device housed within the case.

In the embodiment illustrated in FIG. **25**B, the mounting surface **211** of the detachable lens **210** includes a ring-shaped magnet or magnetized region **212**. As those in the art will appreciate, other magnet configurations can be used, including those where a face or surface of the magnet(s) are not exposed and instead are positioned just below the mounting surface **211** of the lens **210**. Similarly, the component(s) in the attachment point or mount **201** of the case can include one or more appropriately oriented magnets or be ferromagnetic such that the ferromagnetic magnet(s) are magnetically attracted to the magnetized region of the lens **210** when the two are positioned near enough for secure yet detachable connection.

FIGS. **26**A-C illustrate cross section side views of an embodiment of a case that has a proximal opening and a connector that forms a water tight seal when inserted into the proximal opening. FIG. **26**A shows a portion of a mobile device **280** with a port **282** to receive a connector. The mobile device is inside a case **283** having a proximal opening **285** that is proximate the port **282**. A water sealed connector **286** is near the proximal opening **285**. The water sealed connector can mate with the port, and may be any suitable connector, such as a 30 pin connector, a USB connector (e.g. standard, mini, or micro), Lightning connector, or DisplayPort connector. The water sealed connector is sealed from entry by water or aqueous liquids at connector sealed points **289***a*, **289***b*, **289***c*, **289***d*. Sealing of the connector sealed points may be accomplished, for example, using a sleeve or coating formed from a material that resists or repels water (e.g. rubber or silicon). The water sealed connector **286** may have a connector gasket **287** that surrounds a portion of the water sealed connector **286**, such that when the connector is inserted through the proximal opening and mated with the port, a water tight seal is formed between the proximal opening of the case and the water sealed connector. FIG. **26**B illustrates an alternative embodiment of the proximal opening, in which a proximal opening gasket **284** is molded to a portion of the inner face **285***b* of the proximal opening **285***a* of the case **283**.

FIG. **26**B also illustrates an embodiment of the water sealed connector **286** that includes a connector face gasket **281**. One of skill in the art would understand that the connector face gasket of FIG. **26**B could be used in combination with the connector gasket shown in FIG. **26**A. The connector face gasket can also be used to provide a water tight seal between the water-sealed connector and the mobile device. When the water sealed connector is inserted into the proximal opening and mated with the port of the mobile device, a water tight seal is formed between the inner face of the proximal opening of the case and the water sealed connector. FIG. **26**C illustrates the water sealed connector **286** of FIG. **26**A inserted into the proximal opening of the case **283** and mated with the mobile device port **282**. Proximal opening gasket **284** seals the proximal opening from entry of water or other aqueous liquids.

FIG. **27** shows a waterproof microphone and controller **300** for an electronic cord, in accordance with preferred implementations. The waterproof microphone and controller **300** can be used with a mobile computing device, or with an encasement for a mobile computing device, as described herein. The waterproof microphone and controller **300** includes a body **302** that encases an electronic controller and microphone (not shown). The body **302** can be formed of any type of water or liquid resistant material, and may include one or more sealing members to seal the electronic controller and microphone from intrusion by a liquid such as water. In some implementations, the material is silicone, but may include plastic, metal, or any other material that can be sealed against liquid intrusion.

In some implementations, the body **302** includes opposing sock members **304** for receiving and coupling with distal ends of electric cables **305**. The distal ends of the cables **305** may include a special electronic interface. In preferred implementations, the sock members **304** are configured for being overlaid on the distal ends of the cable. One or more collets **303** can be coupled around each of the sock members **304**, preferably as a final assembly step. The collets **303** slightly crush the material that forms the body **302** and/or sock members **304** to form a water tight seal, so that no water can get in by the cable insulation jacket and/or sock members **304**. In some implementations, the opposing sock members **304** are unitary with at least part of the body **302**. In other implementations, the body **302** can include additional jackets for overlaying the sock members **304**.

The body **302** includes one or more control button regions **306** for enabling operation and control of control buttons, switches, latches, etc., of the electronic microphone and controller within the body **302**. For instance, the body **302** can include a volume up, volume down, mute, or other button. The body **302** further includes one or more sealed apertures **308** that are sealed by a water impermeable film or fabric, coupled with the material of the body **302** and overlaying a water permeable electronic feature such as a microphone or speaker. With the waterproof microphone and controller **300** described herein, and its variants, an accessory such as a headphone, earpiece, microphone, camera or other peripheral can be used with a waterproof encasement to encase a mobile computing device.

What is claimed:

1. An apparatus for covering at least part of a mobile computing device having a touch screen display, the mobile computing device further having an electrical connection available at an outer surface of a housing that houses the mobile computing device, the apparatus comprising:

an encasement for the mobile computing device that permits operation of the touch screen display and covers at least part of the mobile computing device that includes the electrical connection, the encasement having an outer surface and an inner surface;

an aperture passing through the inner surface and the outer surface of the encasement proximate the electrical connection of the mobile computing device;

an electrical connection adapter having a body for closing the aperture in the encasement, the electrical connection adapter having a first electrical interface connected with the body, the first electrical interface for interfacing with the electrical connection of the mobile computing device when the body closes the aperture in the encasement, the electrical connection adapter further having a second electrical interface connected with the body, the second electrical interface for transferring electrical power and/or data signals to and/or from the mobile computing device through the first electrical interface, the second electrical interface including

a plurality of sealed, electrically-conductive contacts positioned at an outer surface of the body and accessible from outside of the encasement when the aperture is closed by the body, and

a plurality of electrical conductors extending through the body, each connecting a respective one of the sealed electrically-conductive contacts with the first electrical interface; and

a gasket for sealing the electrical connection adapter with the encasement at the aperture.

2. An apparatus in accordance with claim **1**, wherein the encasement has a bottom member to cover at least a first portion of the mobile computing device, and a top member to cover at least a second portion of the mobile computing device, the top member configured to allow touch access to the touch screen display.

3. An apparatus for covering at least part of a mobile computing device having a touch screen display, the mobile computing device further having an electrical connection available at an outer surface of a housing that houses the mobile computing device, the apparatus comprising:

an encasement that permits operation of the touch screen display and covers at least part of the mobile computing device that includes the electrical connection, the encasement having a frame; and

an electrical connection adapter disposed within a surface of the frame proximate the electrical connection, the electrical connection adapter having a first electrical interface connected with the frame, the first electrical interface for interfacing with the electrical connection of the mobile computing device when the mobile computing device is covered by the encasement, the electrical connection adapter further having a second electrical interface connected with the frame, the second electrical interface for transferring electrical power and/or data signals to and/or from the first electrical interface, the second electrical interface including

a plurality of sealed, electrically-conductive contacts positioned at an outer surface of the encasement and exposed to the exterior environment, and

a plurality of corresponding electrical connections that connect the sealed electrically-conductive contacts with the first electrical interface.

4. The apparatus in accordance with claim **1**, wherein the plurality of sealed, electrically-conductive contacts are flush with the outer surface of the encasement.

5. The apparatus in accordance with claim **2**, wherein the encasement has a coupling mechanism to couple the top member with the bottom member to cover the first and second portions of the mobile computing device, and to seal the top member with the bottom member.

6. The apparatus in accordance with claim **1**, further comprising a coupling mechanism to couple the electrical connection adapter to the encasement.

7. The apparatus in accordance with claim **1**, further comprising a tether that connects the electrical connection adapter with the encasement.

8. The apparatus in accordance with claim **1**, further comprising a hinge that connects the electrical connection adapter with the encasement.

9. The apparatus in accordance with claim **1**, wherein the gasket is coupled with the body of the electrical connection adapter.

10. The apparatus in accordance with claim **1**, wherein the gasket is coupled with the aperture of the encasement.

11. An apparatus for covering at least part of a mobile computing device having a touch screen display, the mobile computing device further having an electrical connection available at an outer surface of a housing that houses the mobile computing device, the apparatus comprising:

a liquid resistant encasement that prevents damage to the mobile computing device from a liquid when the mobile computing device is encased in the liquid resistant encasement and when the liquid resistant encasement is in a sealed configuration with the mobile computing device, the liquid resistant encasement further permitting operation of the touch screen display when the mobile computing device is encased therein, the encasement having an outer surface and an inner surface and an aperture passing therethrough proximate the electrical connection of the mobile computing device;

an electrical connection adapter having a body for sealing the aperture against liquid intrusion into the liquid resistant encasement, the electrical connection adapter having a first electrical interface connected with the body, the first electrical interface for interfacing with the electrical connection of the mobile computing device when the body seals the aperture in the liquid resistant encasement, the electrical connection adapter further having a second electrical interface connected with the body, the second electrical interface for transferring electrical power and/or data signals to and/or from the mobile computing device through the first electrical interface, the second electrical interface including

a plurality of sealed, electrically-conductive connectors positioned at an outer surface of the body and accessible at the outer surface of the encasement when the body seals the aperture, and

a plurality of electrical conductors extending through the body electrically connecting the sealed electrically-conductive connectors with the first electrical interface.

12. The apparatus in accordance with claim **11**, further comprising a gasket for sealing the electrical connection adapter to the encasement at the aperture.

13. The apparatus in accordance with claim **11**, further comprising a coupling mechanism to couple the electrical connection adapter to the encasement when the body closes the aperture in the encasement.

14. The apparatus in accordance with claim **11**, further comprising a tether that connects the electrical connection adapter with the encasement.

15. The apparatus in accordance with claim **11**, further comprising a hinge that connects the electrical connection adapter with the encasement.

16. An apparatus for covering at least part of a mobile computing device having a touch screen display, the mobile computing device further having an electrical connection attached to a housing that houses the mobile computing device, the apparatus comprising:

an encasement that covers at least part of the mobile computing device that includes the electrical connection, the encasement having a bottom member to cover at least a first portion of the mobile computing device, and a top member to cover at least a second portion of the mobile computing device, the top member configured to allow touch access to the touch screen display;

a coupling mechanism to couple the top member with the bottom member to cover the first and second portions of the mobile computing device, and to seal the top member with the bottom member;

an aperture in the encasement proximate the electrical connection of the mobile computing device, the aperture having a gasket seat;

an electrical connection adapter having a body for closing the aperture in the encasement, the electrical connection adapter having a first electrical interface connected with the body, the first electrical interface for interfacing with the electrical connection of the mobile computing device when the body closes the aperture in the encasement, the electrical connection adapter further having a second electrical interface connected with the body, the second electrical interface for transferring electrical power and/or data signals to and/or from the mobile computing device through the first electrical interface, the second electrical interface including

an array of sealed, electrically-conductive contacts positioned at an outer surface of the body and exposed to the exterior environment of the encasement, and

a plurality of electrical connections that electrically connect the sealed electrically-conductive contacts with the first electrical interface; and

a gasket for being seated on the gasket seat to seal an interface between the aperture in the encasement and the body of the electrical connection adapter.

17. An apparatus in accordance with claim **16**, further comprising a second coupling mechanism to couple the electrical connection adapter to the encasement when the body closes the aperture in the encasement.

18. The apparatus in accordance with claim **16**, further comprising a second coupling mechanism to couple the electrical connection adapter to the encasement when the body closes the aperture in the encasement.

19. The apparatus in accordance with claim **16**, further comprising a tether that connects the electrical connection adapter with the encasement.

20. The apparatus in accordance with claim **16**, further comprising a hinge that connects the electrical connection adapter with the encasement.

21. The apparatus in accordance with claim **3**, wherein the encasement has a bottom member to cover at least a first portion of the mobile computing device, and a top member to cover at least a second portion of the mobile computing device, the top member configured to allow touch access to the touch screen display, and wherein the electrical connection adapter is positioned on the top member or the bottom member.

* * * * *