US009427994B2

(12) **United States Patent**
Naivelt

(10) **Patent No.: US 9,427,994 B2**
(45) **Date of Patent: Aug. 30, 2016**

(54) **APPARATUS AND METHOD OF TENSIONING PRINT MEDIA**

(75) Inventor: **Vladimir Naivelt**, Petach Tiqwa (IL)

(73) Assignee: **Hewlett-Packard Development Company, L.P.**, Houston, TX (US)

(*) Notice: Subject to any disclaimer, the term of this patent is extended or adjusted under 35 U.S.C. 154(b) by 2987 days.

(21) Appl. No.: **11/740,527**

(22) Filed: **Apr. 26, 2007**

(65) **Prior Publication Data**

US 2008/0266346 A1 Oct. 30, 2008

(51) **Int. Cl.**

B41J 2/01	(2006.01)
B41J 2/17	(2006.01)
B41J 2/135	(2006.01)
B41J 2/165	(2006.01)
B41J 29/02	(2006.01)
B41J 11/00	(2006.01)
B41J 11/04	(2006.01)
B41J 2/03	(2006.01)

(52) **U.S. Cl.**

CPC ***B41J 29/02*** (2013.01); ***B41J 11/0005*** (2013.01); ***B41J 11/04*** (2013.01); *B41J 2002/031* (2013.01)

(58) **Field of Classification Search**

CPC B41J 15/16; B41J 11/20; B41J 11/005; B41J 2002/031; B41J 29/02; B41J 11/04

USPC 347/37, 38, 101, 104, 105; 271/72, 178, 271/275–277, 307, 309, 310; 346/103, 134, 346/138; 399/143, 165, 176, 361; 400/144.3, 145.1, 145.2, 583.2, 618

See application file for complete search history.

(56) **References Cited**

U.S. PATENT DOCUMENTS

5,771,054	A *	6/1998	Dudek et al.	347/102
6,074,056	A *	6/2000	Kubo et al.	347/104
7,000,917	B2 *	2/2006	Helmstadter et al.	271/276
2001/0015523	A1 *	8/2001	Helmstadter et al.	271/276
2002/0085054	A1 *	7/2002	Tokie	347/15
2005/0092200	A1 *	5/2005	Beauchamp et al.	101/409

* cited by examiner

Primary Examiner — Thomas A Hollweg
Assistant Examiner — Hung Lam
(74) *Attorney, Agent, or Firm* — HP Inc Patent Department

(57) **ABSTRACT**

A method of tensioning a print medium on a drum comprising: supporting the medium on the drum; rotating the drum; and applying a gaseous flow to the medium on the drum, the gaseous flow having a major component that is tangential to the drum and in a direction that is opposite to the linear direction of the surface of the drum.

3 Claims, 7 Drawing Sheets

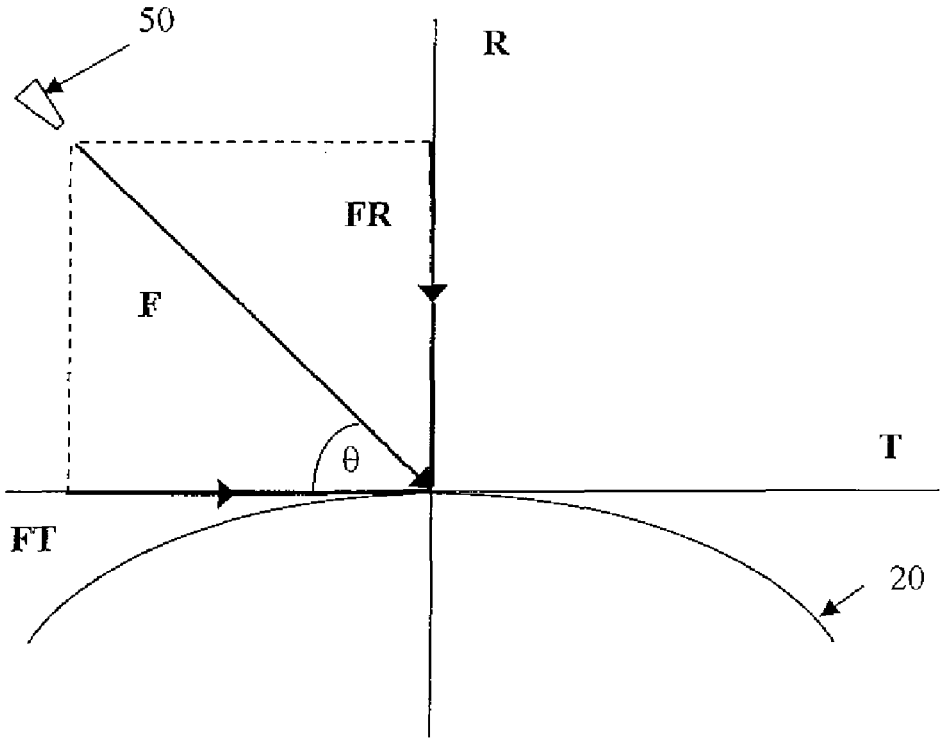

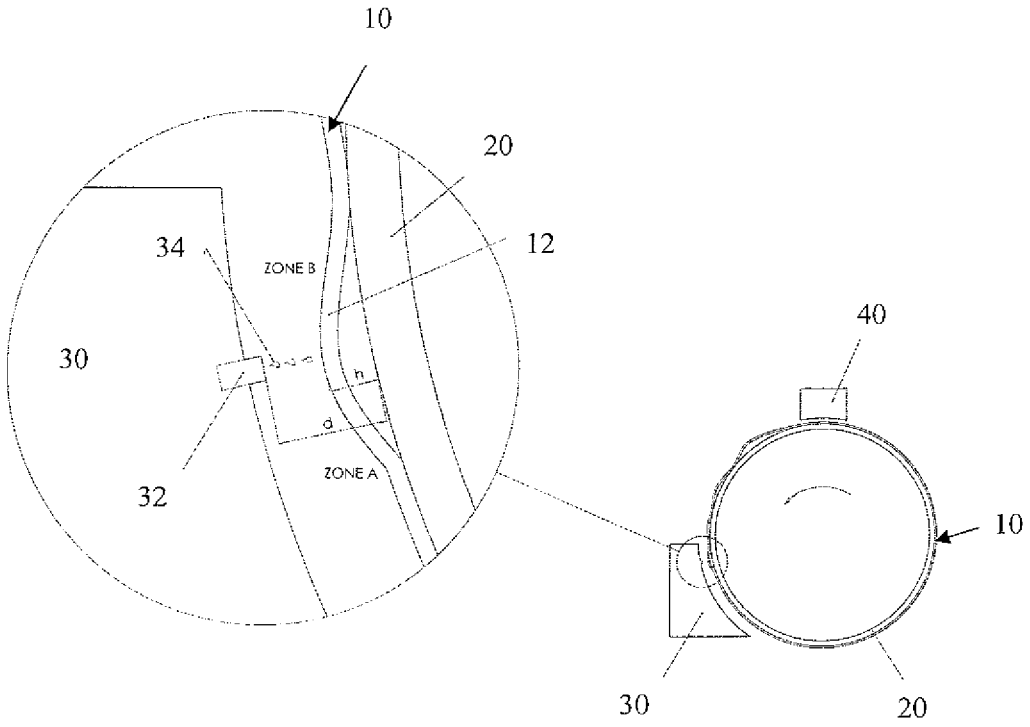

FIGURE 1

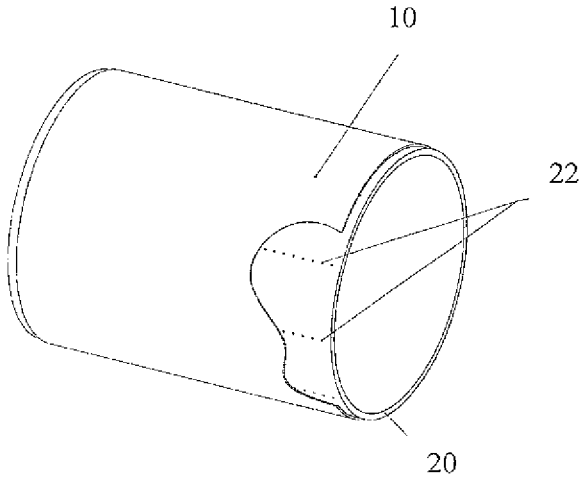

FIGURE 2

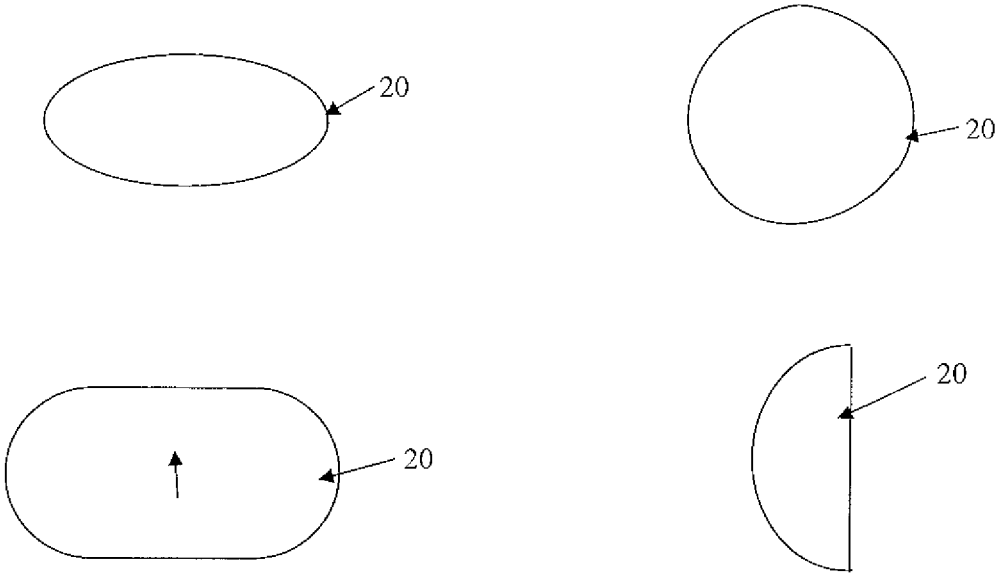

FIGURE 3

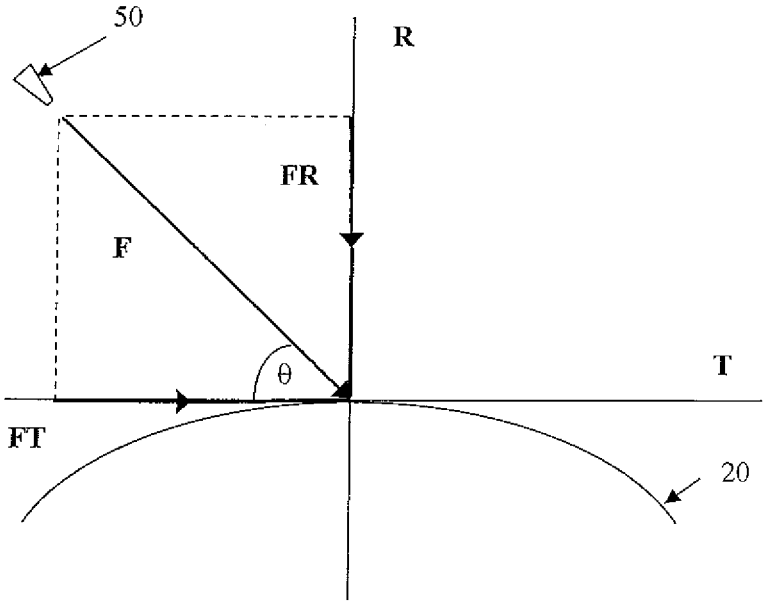

FIGURE 5

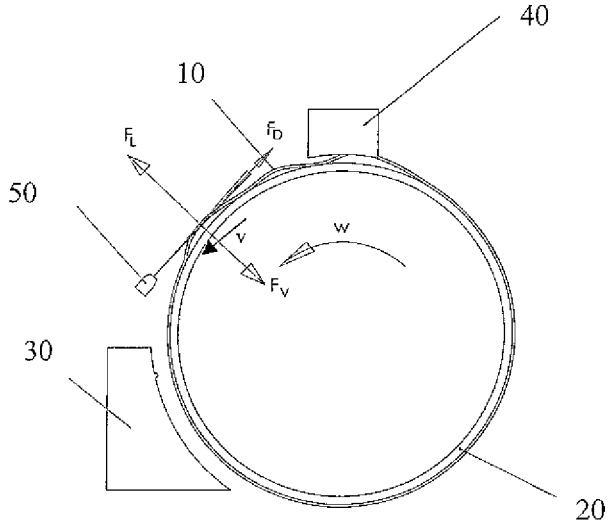

FIGURE 4

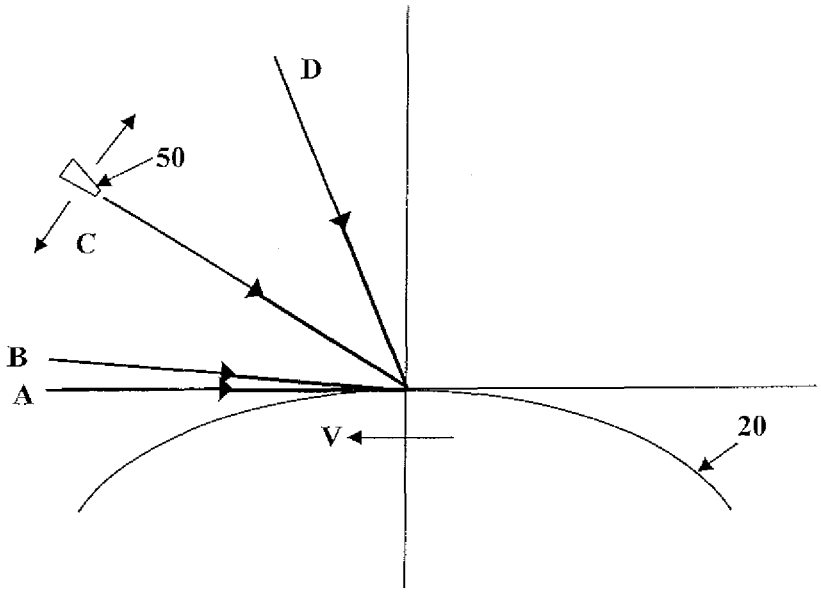

FIGURE 6

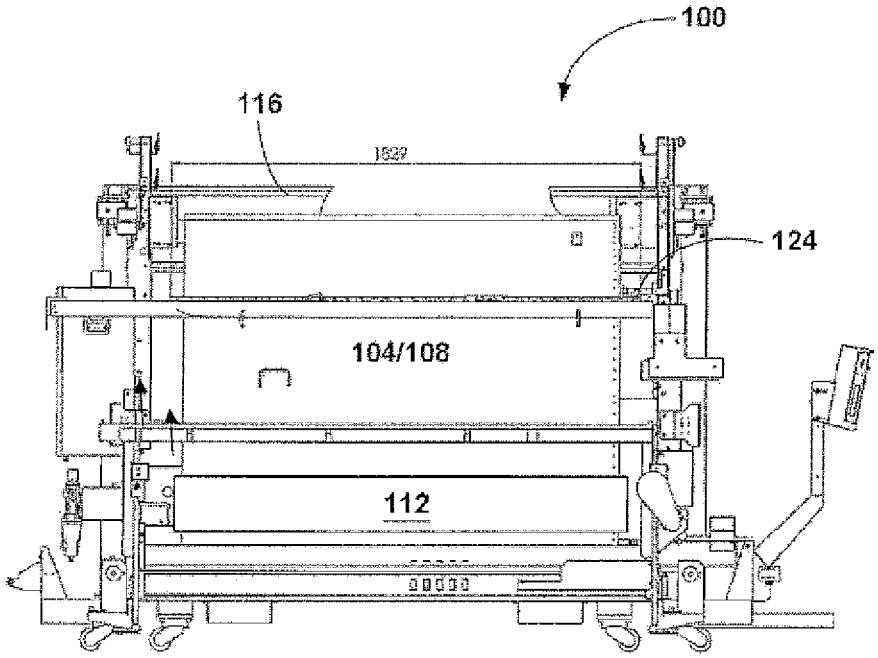

FIGURE 7

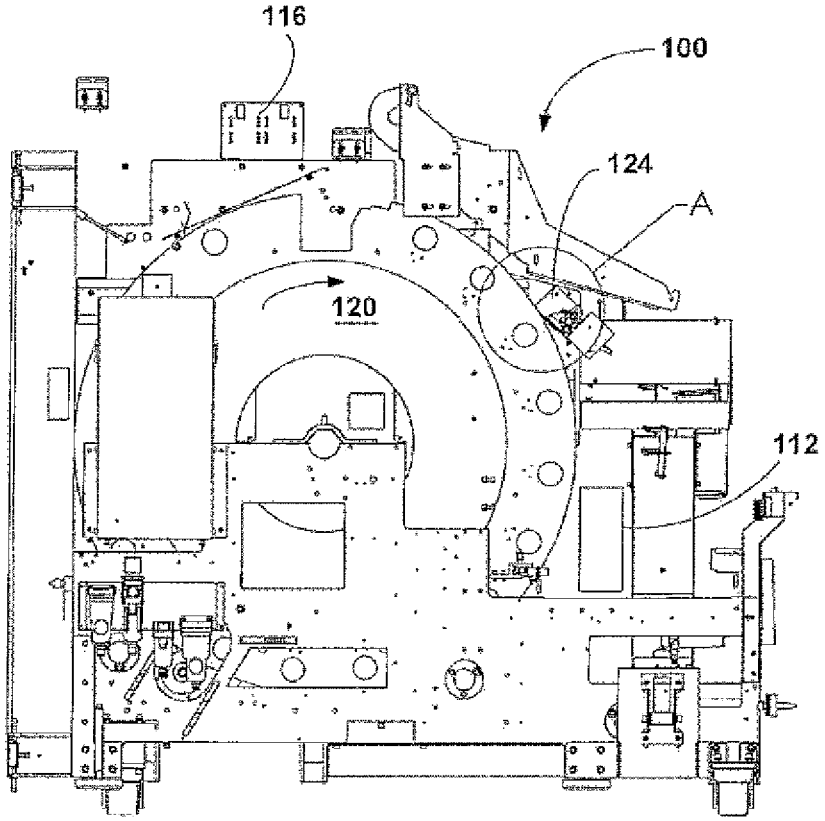

FIGURE 8

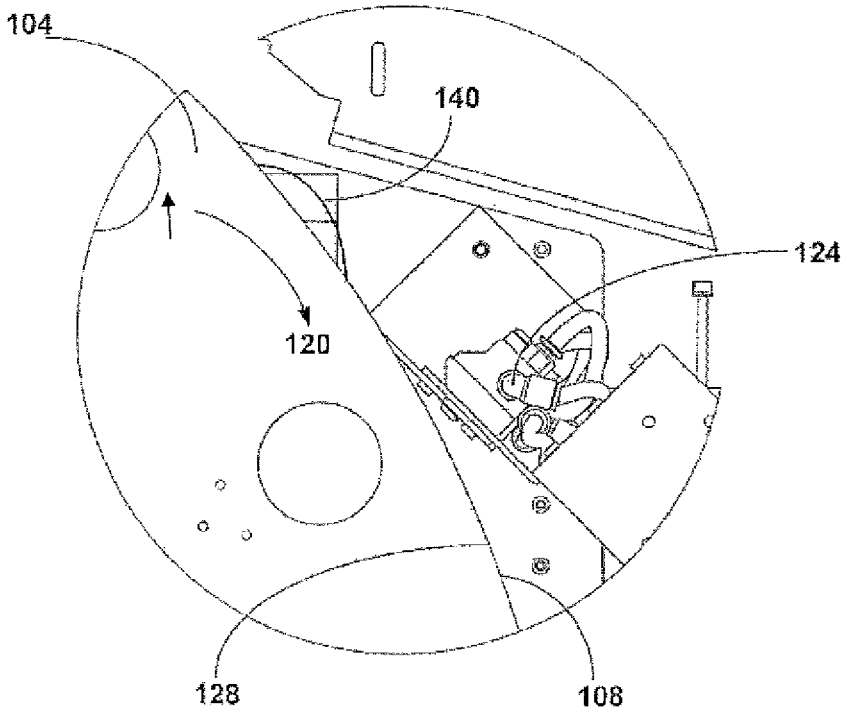

FIGURE 9

APPARATUS AND METHOD OF TENSIONING PRINT MEDIA

An embodiment of the invention provides an ink jet printer comprising: a rotatable drum for supporting a print medium; a motor operable to rotate the drum; an air nozzle directed substantially tangentially to the surface of the drum in a direction that is substantially opposite to the linear direction of the drum; and a printhead operable, in use, to eject ink onto the substrate supported by the drum after the substrate has been treated by the air nozzle.

In some embodiments the ink jet printer is a wide-format printer.

An embodiment of the invention provides a method of pressing a print medium against a printer drum comprising; placing the print medium on the drum; rotating the drum; and applying a substantially laminar flow of air to the print medium on the drum in a direction that is substantially opposite to the direction of the rotating drum thereby applying a tensioning force to the print medium.

An embodiment of the invention provides a method of flattening print media against a printing drum comprising: directing a substantially laminar gas flow across the medium, whilst the medium is on the drum, at a direction that is substantially tangential to the drum.

An embodiment of the invention provides a printing apparatus comprising: a rotatable drum adapted to receive a print medium around at least part of the drum's circumference; and a gas nozzle directed substantially tangential to the circumference of the drum.

An embodiment of the invention provides an apparatus comprising: support means for supporting a print medium means; and air flow means for directing air at the print medium means, the air flow means being directed substantially tangentially at the print medium means when the print medium means is on the support means.

An embodiment of the invention provides use of an air knife to simultaneously flatten and cool a print medium on a medium carrier.

Embodiments of the invention are configured to produce a volumetric flow rate of gas that is equal to or greater than 100 standard cubic feet per minute. Embodiments of the invention are configured to produce a volumetric flow rate of gas that is equal to or greater than 200 standard cubic feet per minute.

The medium carrier may be substantially flat or it may be a roller or other rotatable surface. Such a rotatable surface will generally comprise a convex surface for supporting the medium.

An embodiment of the invention provides an air nozzle and an attachment for fitting the air nozzle to an ink jet printer so that the air nozzle is substantially tangential to the printing drum of the ink jet printer.

Generally this embodiment of the invention will also include instructions on how to fit the air nozzle to the ink jet printer so that the air nozzle is substantially tangential to the printing drum of the ink jet printer.

In an embodiment of the invention the nozzle/air knife is directed substantially tangentially to the drum and substantially in the same direction as the linear velocity of the rotating drum. In this embodiment the medium is still flattened against the drum.

An embodiment of the invention provides a method comprising transporting a print medium on a support in a first direction and applying an air flow having a major component that is in a direction that is opposite to said first direction so as to apply a tensioning force to the print medium.

An embodiment of the invention provides apparatus comprising support means having a surface for supporting a print medium and a gas ejection means for directing gas at the surface of the transport means wherein the gas ejection means is orientated to eject gas at the surface such that in use the print medium is pressed onto the transport means.

It should be appreciated that embodiments and aspects of the invention that are defined in a particular category (e.g. a method) then the same embodiment or aspect can also be defined as other categories (e.g. as a printing system or a printer). The skilled person will understand that the features and embodiments of the invention that are described and claimed may be combined in various ways.

BRIEF DESCRIPTION OF DRAWINGS

Embodiments of the invention will now be described, by way of example only, with reference to the accompanying drawings, of which:

FIG. **1** schematically illustrates a printing system;

FIG. **2** schematically illustrates a print medium wrapped on a printing drum;

FIG. **3** schematically illustrates, in cross-section, some example drums that can be used according to embodiments of the invention;

FIG. **4** schematically illustrates a printing system incorporating an air knife according to an embodiment of the invention;

FIG. **5** schematically illustrates an air nozzle and a set of reference axes in relation to a printing drum;

FIG. **6** schematically illustrates various orientations of an air nozzle in relation to a printing drum;

FIG. **7** illustrates a front view of a large format inkjet printing drum machine;

FIG. **8** illustrates a side view of the inkjet printing drum machine illustrated in FIG. **7**; and

FIG. **9** illustrates a detail of the inkjet printing drum machine illustrated in FIGS. **7** and **8**.

SPECIFIC DESCRIPTION

FIG. **1** illustrates a printing apparatus comprising a drum **20** upon which a print medium **10** is wound and a means for applying ink **34** to the medium **10**. In the specific example illustrated in FIG. **1** the printing apparatus is an ink jet printer in which the ink applying means is a printhead **32** which is supported by a printhead carriage **30**. The carriage **30** moves in relation to the drum **20** so that a printed image may be built up on the medium **20** as the drum **20** rotates. Although a specific embodiment of the invention is described in relation to ink jet printers it should be appreciated that embodiments of the invention can be realised with other types of printer eg dry tone laser printers, liquid electrophotographic printers (eg LEPs and LED printers) to name a few.

FIG. **2** illustrates the drum **20** in more detail. In particular, in the example drum illustrated, the drum **20** has a number of vacuum holes **22** so that once the medium **10** has been wound onto the drum **20** the medium **10** may be held onto the drum surface by vacuum forces applied through the vacuum holes **22**. Vacuum holes **22** are often used on large format printers (sometimes also called "wide format printers"). In large format printers the circumference of the drum **20** may be from about half a meter to several meters.

Although the drum **20** illustrated is a cylinder having a substantially circular cross-section, embodiments of the invention are not necessarily limited to any particular geometry. The main requirement of the drum is that it is able to transport the medium **10** so as to present the medium to the ink applying means (i.e. the printhead **22** in FIG. **1**). As illustrated in FIG. **3**, the drum **20** may therefore have a non-circular cross-section such as an elliptical cross-section D-shaped cross-section or have a shape/configuration that produces a cam. Generally the drum **20** will have a convex surface for supporting the print medium **10** although embodiments of the invention can use a flatbed medium carrier (described in more detail herein below).

The print medium **20** can be any of a wide range of substrates including paper, vinyl, textiles or polypropylene films such as that known YUPO® (sometimes referred to as "synthetic paper") or other types of polymer film.

Large format printing devices, the medium carrier may have a length of several tens of centimetres to several meters (the length being defined in relation to a process direction of the printing apparatus), for example in printers in which the print carrier is a drum **20** the drum **20** may have a circumference of the order of 0.5 meter to several meters. Large format printing devices are generally operated in a controlled environment because small temperature changes can cause significant variations in the size of the printed image and/or degrade image registration. The problem can be severe when flexible printing substrates such as YUPO® are used.

The drum **20** may be operable to repeatedly pass under a printhead **32** and a source of drying or curing **40** as illustrated in FIG. **1**. This processing produces heat and the difference in the temperature of the print medium **10** at the end of the printing process compared to the temperature of the print medium **10** at the start of the printing process may be several Celsius and may be as high as 15 to 20 Celsius. This increase in temperature causes the print medium **10** to swell to produce a deformed area **12** of the medium **10** on the drum **20**. For a drum **20** having a circumference of about 5 meters the ends of the same substrate may expand by a few millimetres. Despite the use of a vacuum to hold the print medium **10** against the drum **20** the difference in size of the print medium **10** from the beginning to the end of the printing process causes sections of the medium **20** to be released from the drum **20**. This causes a loss of image registration and degrades the quality of the printed image.

FIG. **1** includes an enlarged view of a section of the print medium **10** in the vicinity of the print head **32**. The swelling of the medium **10** produces print artefacts for example by causing areas different densities of colours than that which were intended (zone A and zone B on FIG. **1**). FIG. **1** shows an area **12** of the medium **10** that has deformed so that it has become detached from the drum **20** so that the printing surface of the medium **10** is at height h above the surface of the drum **20**. When the swelling is such that the height h exceeds the distance d of the printhead **32** above the drum **20** then the ink **34** fired by the printhead **32** will be smeared on the medium **10** and the printhead **32** can become damaged. Typically distance d is about 1.5 mm for large format printers.

Referring to FIG. **4**, according to an embodiment of the invention a nozzle **50** is used to direct gas at the medium **10**. Although other gases may conceivably be used the gas is generally air since it is cheaper than other gases and is not flammable or toxic. In an embodiment of the invention the nozzle **50** produces a high intensity uniform sheet of airflow. Such airflow is often referred to in the manufacturing arts as an "air knife". The term "air knife" is also commonly used to refer to the nozzle which produces such an airflow. The airflow is directed at the medium **10** on the drum **20** so that the airflow applies a substantially tangential force to the medium **10**. The airflow is generally applied over all or most of the axial length of the drum **20**. This may be achieved using a nozzle **50** which has an opening for producing the airflow wherein the opening has an axial extent which is as long as most or all of the axial length of the drum **20** or longer than the axial length of the drum **20**.

The Coanda effect, also known as "boundary layer attachment", is the tendency of a stream of fluid to stay attached to a surface. For example a stream of fluid may stay attached to a convex surface rather than follow a straight line in its original direction. The Coanda effect keeps the air stream produced by the nozzle **50** attached to the surface of the drum **20**. This is advantageous because it keeps the airflow in the direction required, for example, tangentially to the drum surface and/or in the direction opposite to the linear velocity of the drum surface. Additionally, the Coanda effect causes the jet of air to have a larger area of contact with the medium **10** on the drum **20** thereby flattening and cooling a larger area of the medium **10**. There is a smooth temperature gradient within the airflow attached to the drum **20** so that there is no temperature shock to the medium **10** below the air knife.

FIG. **5** illustrates an axis system with reference to the drum **20** in which the T axis is in the tangential direction to the drum's surface and the R axis is in a direction that extends radially from the drum's surface (i.e. orthogonal to the T axis). A nozzle directed at an angle $\Theta$to the tangent to the drum's surface is operated to produce an airflow with a force F against the surface of a print medium **10** supported by the drum **20**. The force F has a force component in the tangential direction, F_T=F cos Θ, and a force component in the radial direction, F_R=F sin Θ. Preferably the airflow is directed so that most of the force F will act in the tangential direction T. That is, nozzle **50** is directed at the drum surface with an angle of less than 45 degrees so that the major component of the force F produced by the airflow will be in the tangential direction T.

FIG. **6** illustrates the nozzle **50** orientated in several different positions (A, B, C, D) relative to the surface of the drum **10**. The nozzle **50** may be orientated substantially tangentially to the drum **20** (position A) so that the airflow exiting the nozzle **50** produces a force F that acts tangentially on the medium **10** on the drum **20**. If the nozzle is position at a slight angle to the tangent to the drum **20** (position B), e.g. 15 degrees, the force F will still be substantially tangential (e.g. F_T=F cos15=0.97 F). As the angle, θ, approaches 45 degrees (position C) the tangential component of the force F decrease but it is still the major component (i.e. it is larger than the radial component of the force F_R), At θ=45 degrees the resolved components are equal (F_T=F_R) and at θ>45 degrees (eg at position D) the radial component takes over as the major component of the force F.

When the tangential component of the force produced by the airflow is acting in a direction that is opposite to the linear velocity, v, of the medium **10** on the drum **20** (at the position that the airflow intercepts the medium **10**) then there is a relative velocity between the airflow and the medium **10** that is higher than the velocity of the airflow itself. The airflow produces a drag force F_D on the medium **10**. This drag force acts to tension the medium **10** on the drum **20** and, as a consequence flattens the medium **10** against the drum **20**. Higher relative velocities between the

airflow and the medium **10** can produce higher forces tending to flatten the medium **10** to the drum **20**.

Referring again to FIG. **4**, a lifting force FL acting on the medium **10** is shown. The lifting force is caused by the airflow over the medium **10** causing a reduced pressure compared to the pressure below the medium **10**.

Generally the airflow is substantially laminar however in some embodiments the flow is not laminar but has an overall direction that is substantially opposite to the direction of rotation of the drum **20**.

The nozzle **50** may produce an airflow that is substantially laminar across a portion of the airflow and it is this portion that is directed to intercept the drum **20**. In one example the nozzle **50** may have an elongated slot from which the airflow is ejected and the elongated slot is substantially aligned with the axis of the drum **20**. In this case it may be possible that the flow deviates from a substantially laminar flow at the edges of the flow (in the axial direction). In this situation the deviation may be acceptable if the portion of the flow exhibiting the deviation is small compared to the substantially laminar portion of the flow. Alternatively, the slot may have an axial extent that is longer than the axial length of the drum so that at least some of the portion that deviates from a substantially laminar flow does not intercept the drum **20**.

The stream of air that passes over the drum **20** involves a large volume of air from the surrounding environment along with the small amount of compressed air from the air knife itself. This large volumetric flow of air has a large cooling effect on the medium **10**.

The airflow passing through the nozzle **50** may be cooled or temperature controlled. For example, a cooler may be used to cool the air before it enters the nozzle **50**. The temperature of the airflow may be controlled so that it is cooler than the ambient temperature of the air surrounding the drum **20**.

The nozzle **50** and/or cooler can be retrofitted to a printing system to produce the desired airflow over the medium **10** on the drum **20**. The nozzle **50** may therefore be supplied with an attachment for attaching the nozzle to the printing system at the required angle (e.g. substantially tangentially to the printing drum **20**). The attachment may attach the nozzle **50** at a fixed angle to the drum **20** or may allow for the required angle to be set by a user. A set for retrofitting a nozzle **50** may comprise instructions for fitting the nozzle at the required angle (e.g. substantially tangentially to the printing drum **20**), the nozzle **50** and the attachment.

FIG. **7** is a schematic, frontal view illustration of a large format inkjet printing drum machine **100** and FIG. **8** is a schematic, side view illustration of the same machine **100**. Machine **100** includes a drum **104** that holds the substrate (print medium) **108**, which may be a vinyl, paper, YUPO type material or other flexible material. Printhead **112** prints successive swathes of the image and progresses from one machine end to the other machine end (from left to right as illustrated in FIG. **8**). Associated with the printhead movement is a wide source **116** of curing energy, such as a UV lamp. Arrow **120** indicates drum rotation direction. Under the influence of heat generated by lamp **116**, the substrate **108** changes its size and certain sections of it may even bulge, this is despite the substrate being held down on the drum by a vacuum.

FIG. **9** is a schematic expansion of a section of the machine marked A that illustrates a bulge **140** in the medium **10**.

Traditional cooling devices, even those providing a large volume of air do not cool sufficiently'substrate **108** or drum **104**, nor are they capable of attaching substrate **108** to the surface of the drum. Use of water-cooling may complicate and would generally be used for cooling the drum **20** rather than directly cooling the substrate **108**. Air knife **124** is installed in such a way that a high intensity, balanced stream of laminar airflow across the entire width of the drum is directed tangential to the drum **104** surface. Such air knife installation generates a strong "laminar" flow in excess of 250 SCFM (standard cubic feet per minute) of air along the drum circumference. The Coanda effect keeps the air stream attached to the drum surface **128**. This develops pressure on the substrate **108** and keeps it attached to the drum surface **128**. The stream involves a large volume of air from the surrounding area along with the small amount of compressed air from the air knife itself. The amount of air involved is more than a magnitude larger than the one produced by conventional cooling means. The method described maintains the temperature of the drum **104** and substrate **108** in the range of ±2.0 Celsius in course of a five minute printing cycle and keeps the substrate **108** firmly attached to drum surface **128**.

In an embodiment of the invention the printer is a flat-bed printer that uses a flat-bed medium carriage to transport the print medium with respect to the printing means, In this embodiment the air knife is directed substantially in the direction of the plane of the medium supported on the medium carriage. Flatbed printers generally use less flexible print media than drum based printers however medium expansion can still be a problem and the use of an air knife as described above can be used to improve the print quality of the printed medium.

Thus, while the present invention has been described in terms of preferred embodiments, it will be appreciated by one of ordinary skill that the spirit and scope of the invention is not limited to those embodiments, but extends to the various modifications and equivalents as defined in the appended claims.

We claim:

1. A method of tensioning a print medium on a drum comprising:

supporting the medium on the drum; rotating the drum; and

applying a gaseous flow to the medium on the drum, the gaseous flow having a major component that is tangential to the drum and in a direction that is opposite to the linear direction of the surface of the drum; and

controlling the temperature of the gaseous flow.

2. A printing apparatus comprising a drum for receiving a print medium and a nozzle directed substantially tangentially at the drum;

in which said nozzle is positioned such that a gaseous flow exits said nozzle to pass over said print medium when said print medium is disposed on said drum, said gaseous flow having a major component tangential to said drum that creates tension along a length of said print medium disposed on said drum; and

a cooler operable to cool gas before the gas exits the nozzle in said gaseous flow.

3. The printing apparatus of claim **2** wherein the cooler has a variable control operable to adjust the temperature of the gas exiting the air nozzle.

* * * * *