US009326093B2

(12) **United States Patent**
Xie et al.

(10) **Patent No.: US 9,326,093 B2**
(45) **Date of Patent: Apr. 26, 2016**

(54) **VIRTUAL BLUETOOTH CONTROLLER INTERFACES**

(71) Applicant: **Google Inc.**, Mountain View, CA (US)

(72) Inventors: **Wei Xie**, Palo Alto, CA (US); **Prem Kumar**, Saratoga, CA (US); **Wei Wang**, San Carlos, CA (US)

(73) Assignee: **Google Inc.**, Mountain View, CA (US)

(*) Notice: Subject to any disclaimer, the term of this patent is extended or adjusted under 35 U.S.C. 154(b) by 69 days.

(21) Appl. No.: **14/304,091**

(22) Filed: **Jun. 13, 2014**

(65) **Prior Publication Data**

US 2015/0365780 A1 Dec. 17, 2015

(51) **Int. Cl.**

H04B 7/00	(2006.01)
H04W 4/00	(2009.01)
H04M 1/725	(2006.01)
H04W 76/02	(2009.01)

(52) **U.S. Cl.**
CPC ***H04W 4/008*** (2013.01); ***H04M 1/7253*** (2013.01); ***H04W 76/023*** (2013.01)

(58) **Field of Classification Search**
CPC ... H04W 4/008; H04W 76/023; H04W 4/005; H04W 48/16; H04M 1/7253
USPC 455/41.2
See application file for complete search history.

(56) **References Cited**

U.S. PATENT DOCUMENTS

6,842,460 B1 * 1/2005 Olkkonen H04W 48/16 370/328
8,447,910 B1 5/2013 Yi et al.
8,620,379 B2 * 12/2013 Zhodzishsky H04L 69/32 370/252
2002/0174073 A1 * 11/2002 Nordman G06Q 20/382 705/64
2003/0006911 A1 * 1/2003 Smith G06Q 30/02 340/988
2003/0228842 A1 * 12/2003 Heinonen H04L 63/083 455/41.2
2008/0189360 A1 * 8/2008 Kiley G06F 17/30867 709/203
2008/0255943 A1 * 10/2008 Morten G06Q 30/02 705/14.53
2009/0094317 A1 * 4/2009 Venkitaraman ... H04L 29/12311 709/203

(Continued)

FOREIGN PATENT DOCUMENTS

EP 2461247 A1 6/2012

OTHER PUBLICATIONS

Qadeer, Mohammed A., Bluetooth Enabled Mobile Phone Remote Control for PC, IEEE Xplore, Mar. 23, 2009, 747-751.

(Continued)

Primary Examiner — Marceau Milord
(74) *Attorney, Agent, or Firm* — McDonnell Boehnen Hulbert & Berghoff LLP

(57) **ABSTRACT**

Example embodiments herein disclose methods, Bluetooth devices, and computer-readable media a capable of providing virtual Bluetooth controller (VBC) interfaces for a number of applications. In particular, an example method includes determining a number of applications configured to communicate with a Bluetooth device. Further, the method includes determining a number of virtual Bluetooth controller (VBC) interfaces for the number of applications, where the number of VBC interfaces correspond to respective Bluetooth static random (BSR) addresses of a number of BSR addresses. Yet further, the method includes determining one or more advertising packets for the number of VBC interfaces, where the one or more advertising packets include the respective BSR addresses of the number of BSR addresses. In addition, the method includes transmitting, via a radio of the Bluetooth device, the one or more advertising packets for the number of VBC interfaces.

17 Claims, 10 Drawing Sheets

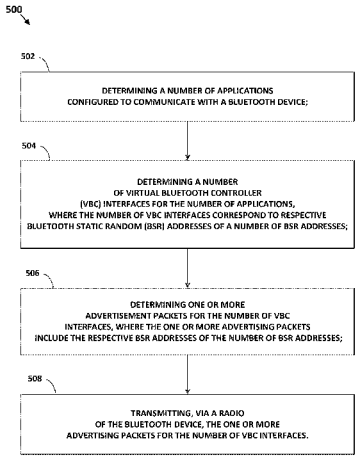

(56) **References Cited**

U.S. PATENT DOCUMENTS

2011/0081860 A1* 4/2011 Brown H04N 1/00347 455/41.3
2012/0196534 A1* 8/2012 Kasslin H04W 76/002 455/41.2
2013/0006866 A1* 1/2013 Pendakur G06Q 30/0241 705/50
2013/0040574 A1* 2/2013 Hillyard H04W 8/005 455/41.2
2013/0165044 A1* 6/2013 Xie H04W 52/0229 455/41.2
2014/0194062 A1* 7/2014 Palin H04W 4/008 455/41.2
2014/0373123 A1* 12/2014 Kang H04L 41/22 726/7
2015/0289124 A1* 10/2015 Palin H04W 8/005 455/41.2

OTHER PUBLICATIONS

Manikandan, G., Traffic Control by Bluetooth Enabled Mobile Phone, International Journal of Computer and Communication Engineering, May 2012, 66-69, vol. 1, No. 1.

* cited by examiner

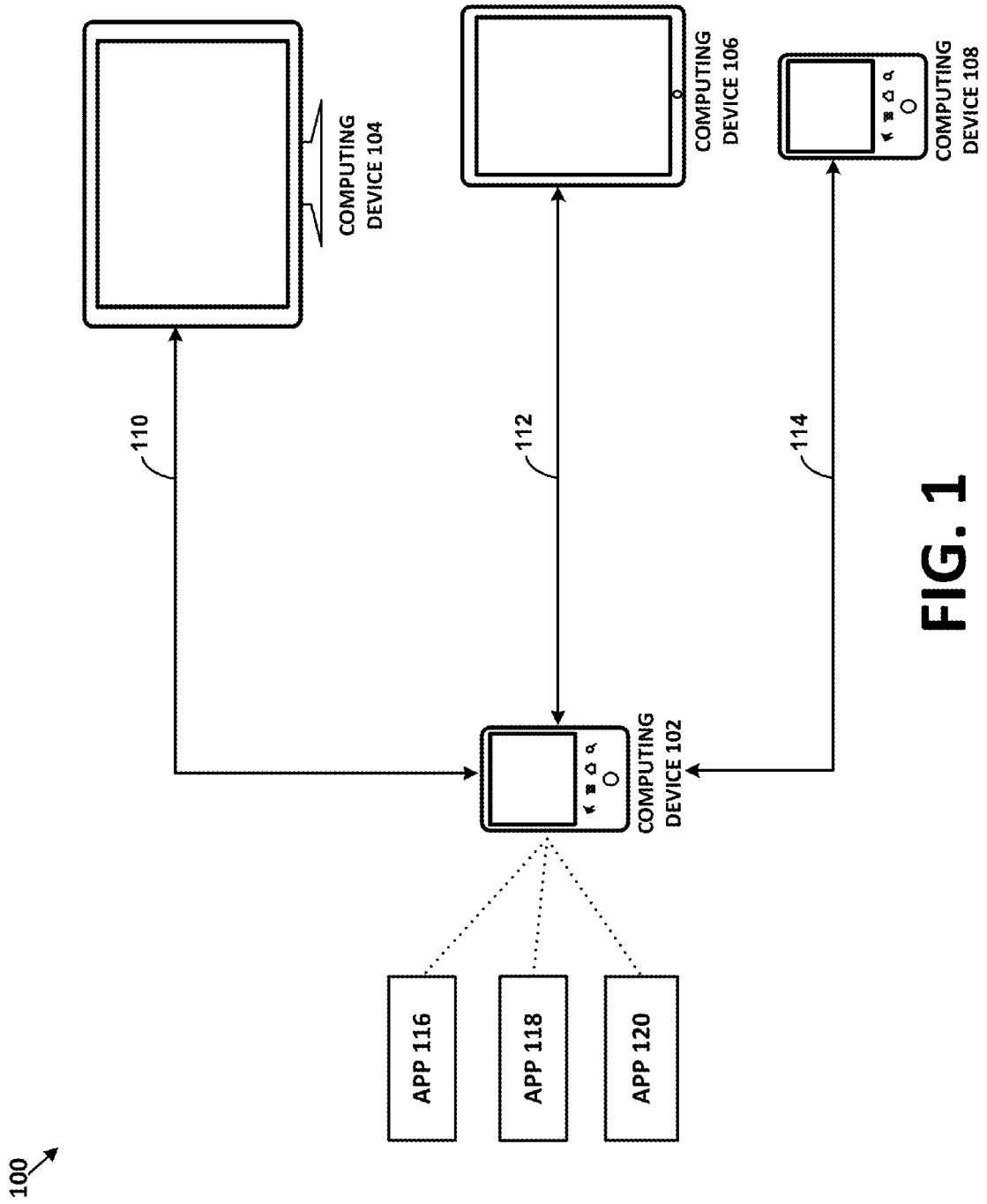
100
110
112
114
COMPUTING DEVICE 104
COMPUTING DEVICE 106
COMPUTING DEVICE 108
COMPUTING DEVICE 102
APP 116
APP 118
APP 120

FIG. 1

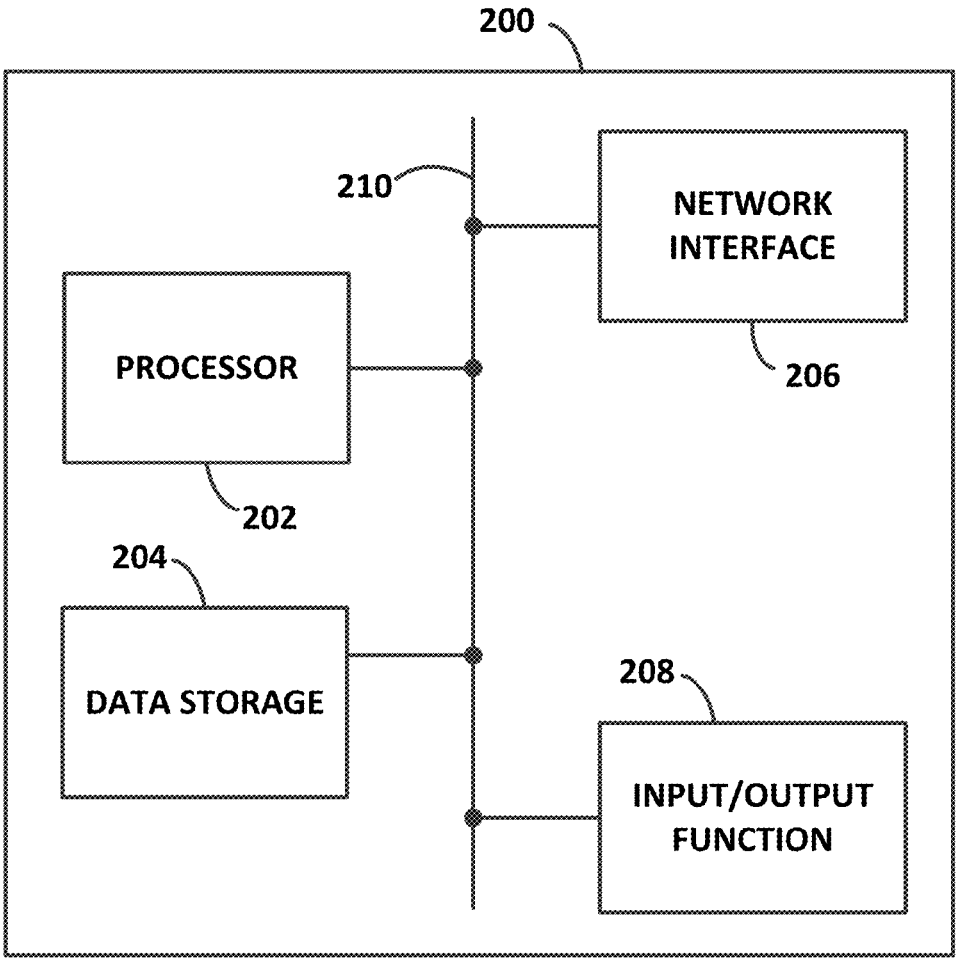
200
210
NETWORK INTERFACE
206
PROCESSOR
202
204
DATA STORAGE
208
INPUT/OUTPUT FUNCTION

FIG. 2

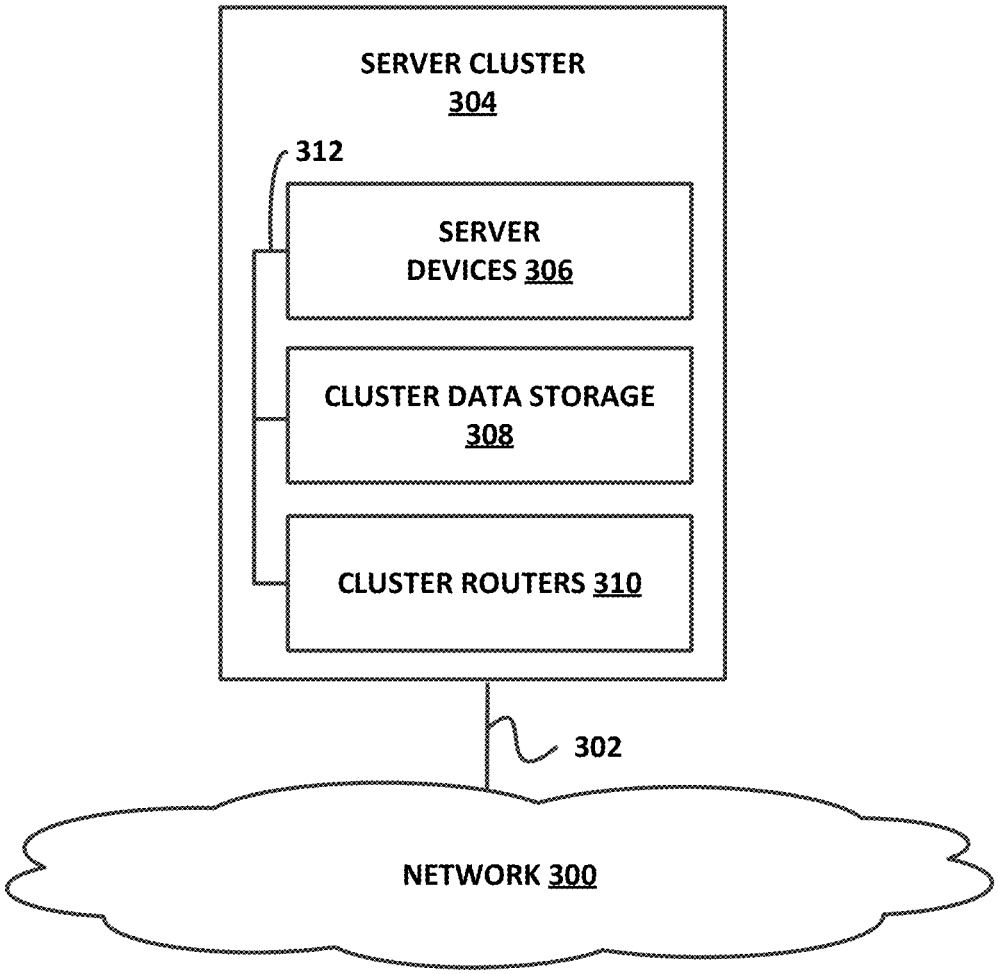
SERVER CLUSTER
304
312
SERVER
DEVICES 306
CLUSTER DATA STORAGE
308
CLUSTER ROUTERS 310
302
NETWORK 300

FIG. 3

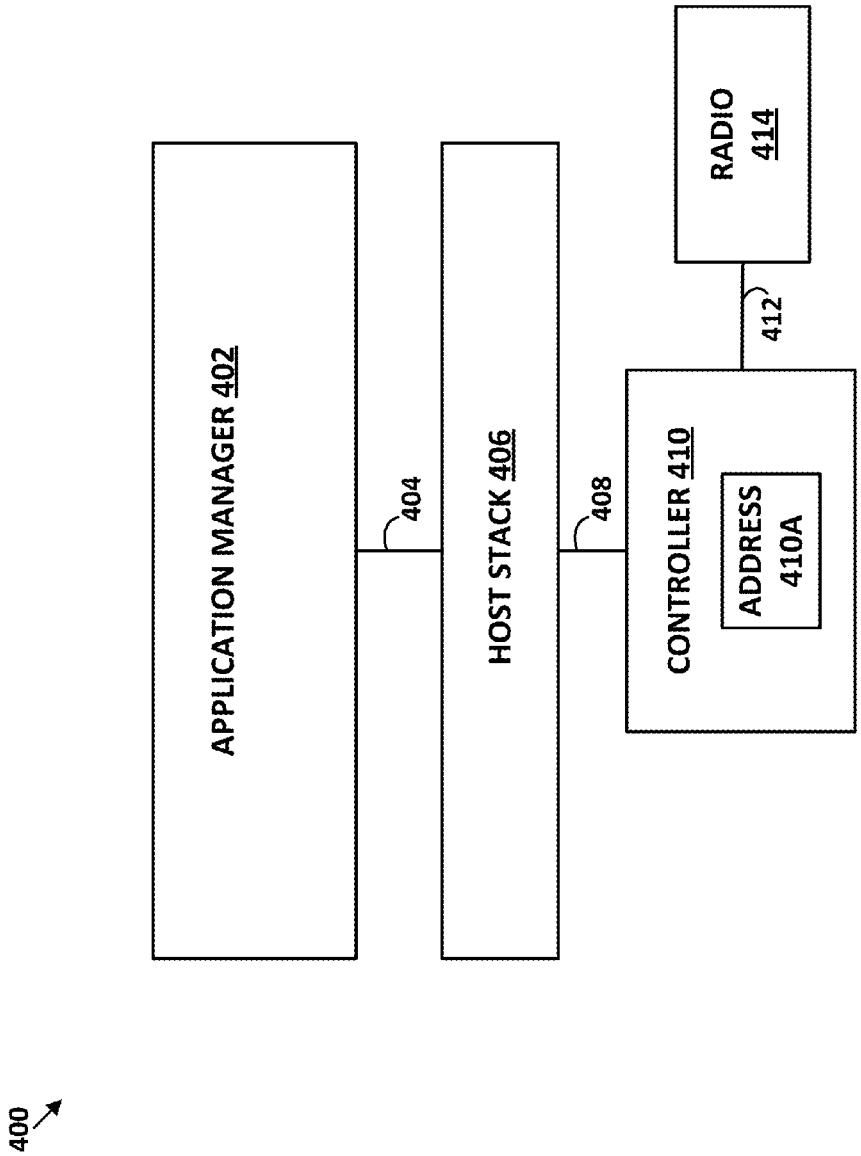
400
APPLICATION MANAGER 402
404
HOST STACK 406
408
CONTROLLER 410
ADDRESS 410A
412
RADIO 414

FIG. 4A

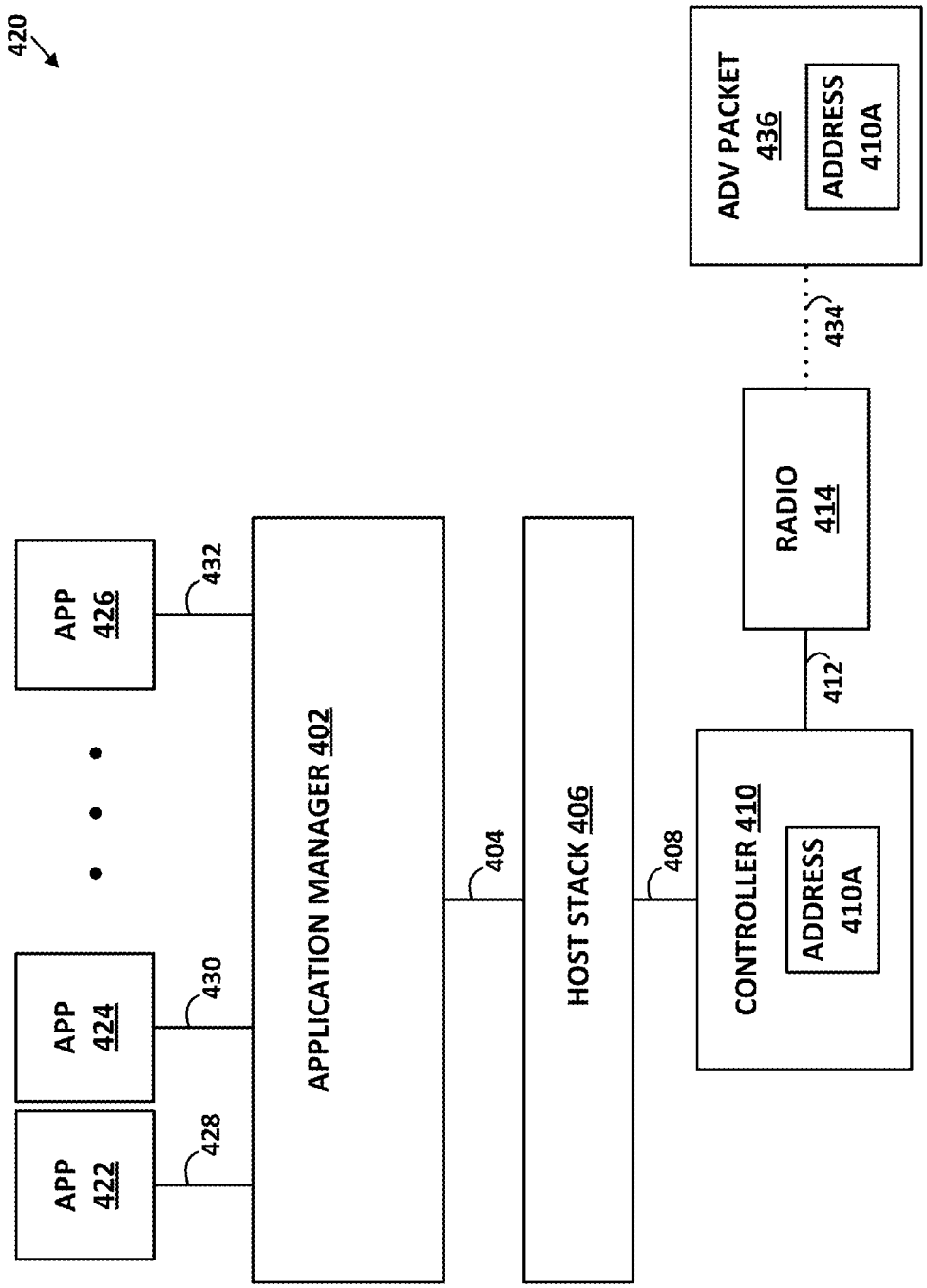
420
APP 422
APP 424
APP 426
428
430
432
APPLICATION MANAGER 402
404
HOST STACK 406
408
CONTROLLER 410
ADDRESS 410A
412
RADIO 414
434
ADV PACKET 436
ADDRESS 410A

FIG. 4B

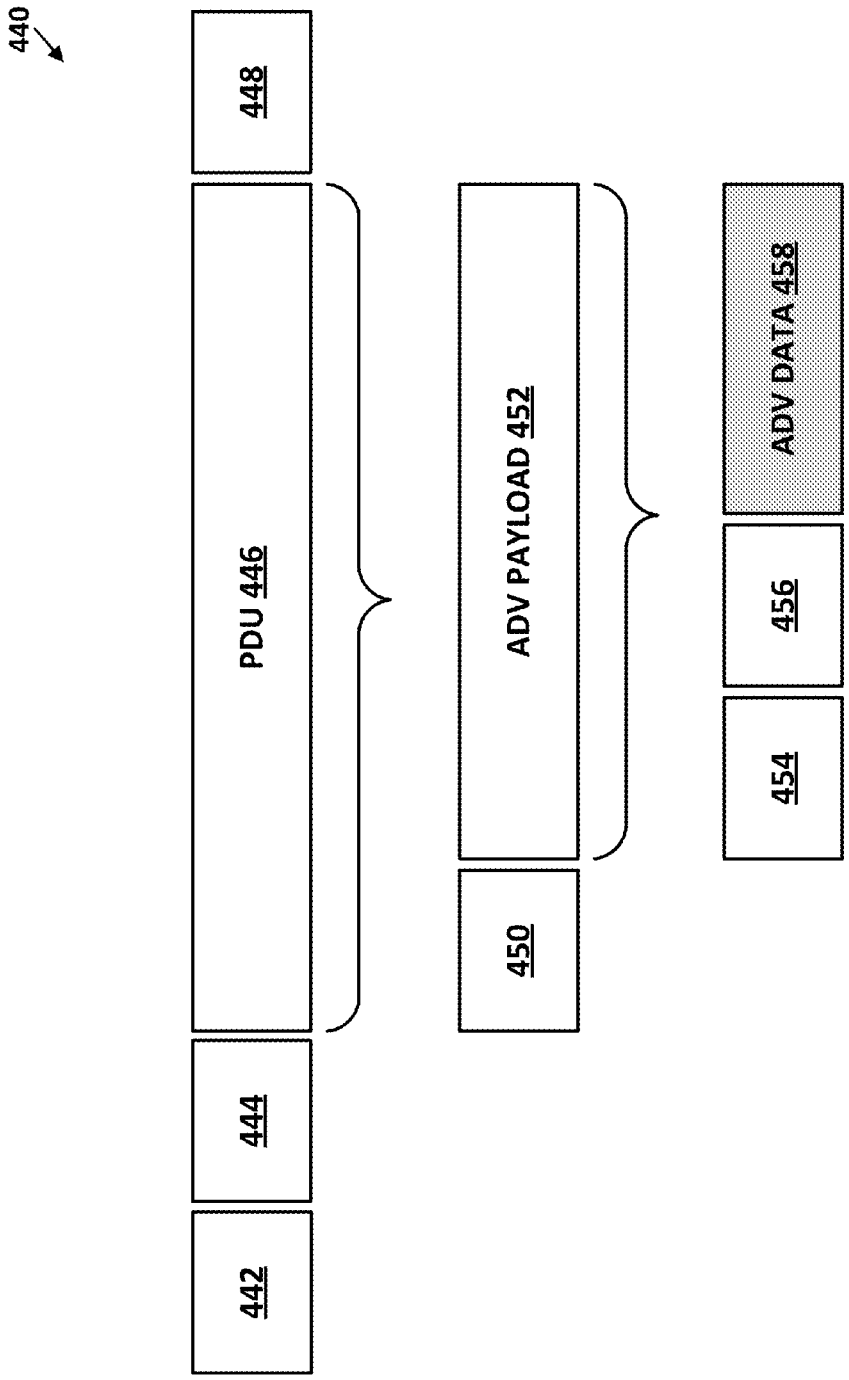
440
448
PDU 446
444
442
ADV PAYLOAD 452
450
ADV DATA 458
456
454

FIG. 4C

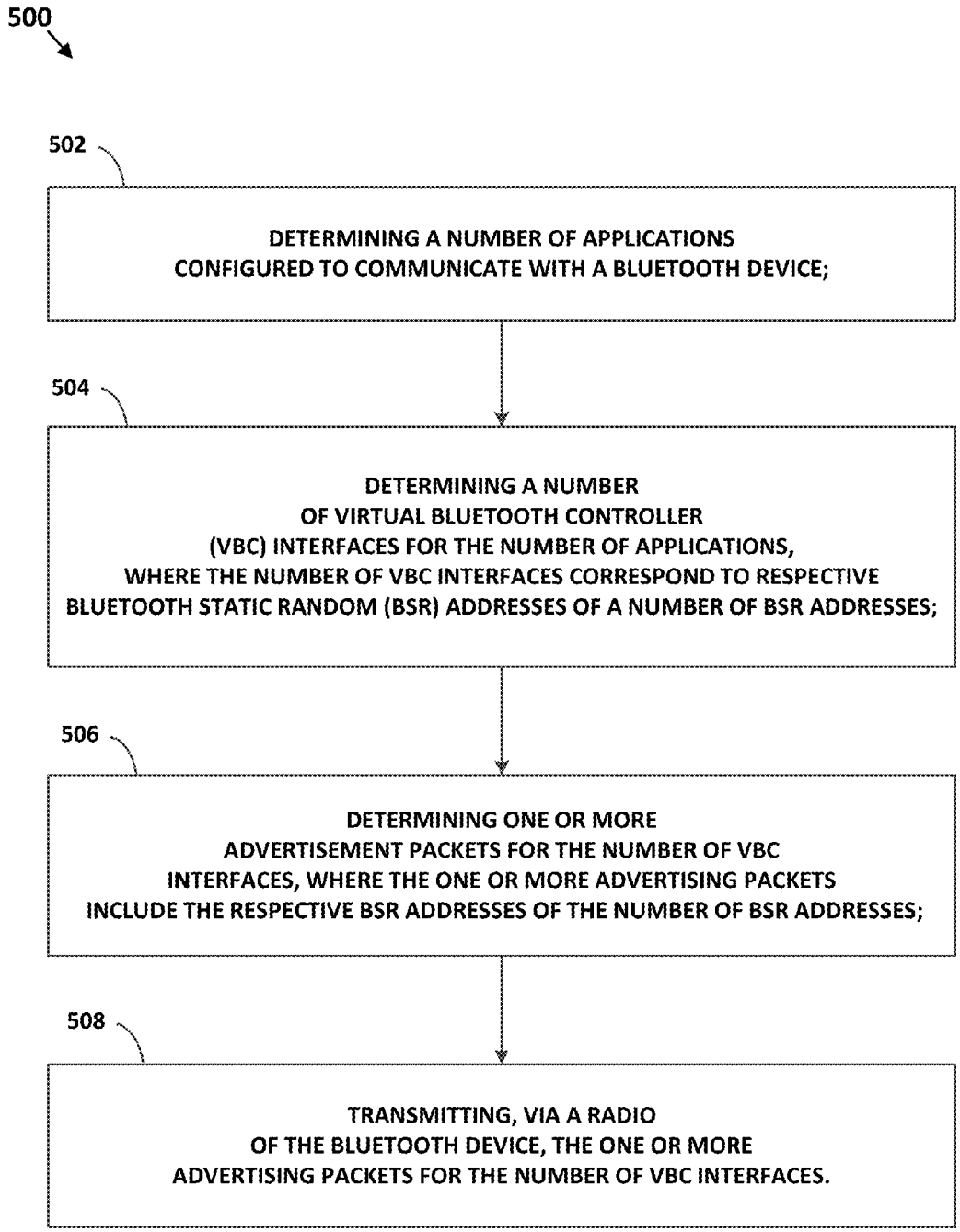
500
502
DETERMINING A NUMBER OF APPLICATIONS CONFIGURED TO COMMUNICATE WITH A BLUETOOTH DEVICE;
504
DETERMINING A NUMBER OF VIRTUAL BLUETOOTH CONTROLLER (VBC) INTERFACES FOR THE NUMBER OF APPLICATIONS, WHERE THE NUMBER OF VBC INTERFACES CORRESPOND TO RESPECTIVE BLUETOOTH STATIC RANDOM (BSR) ADDRESSES OF A NUMBER OF BSR ADDRESSES;
506
DETERMINING ONE OR MORE ADVERTISEMENT PACKETS FOR THE NUMBER OF VBC INTERFACES, WHERE THE ONE OR MORE ADVERTISING PACKETS INCLUDE THE RESPECTIVE BSR ADDRESSES OF THE NUMBER OF BSR ADDRESSES;
508
TRANSMITTING, VIA A RADIO OF THE BLUETOOTH DEVICE, THE ONE OR MORE ADVERTISING PACKETS FOR THE NUMBER OF VBC INTERFACES.

FIG. 5

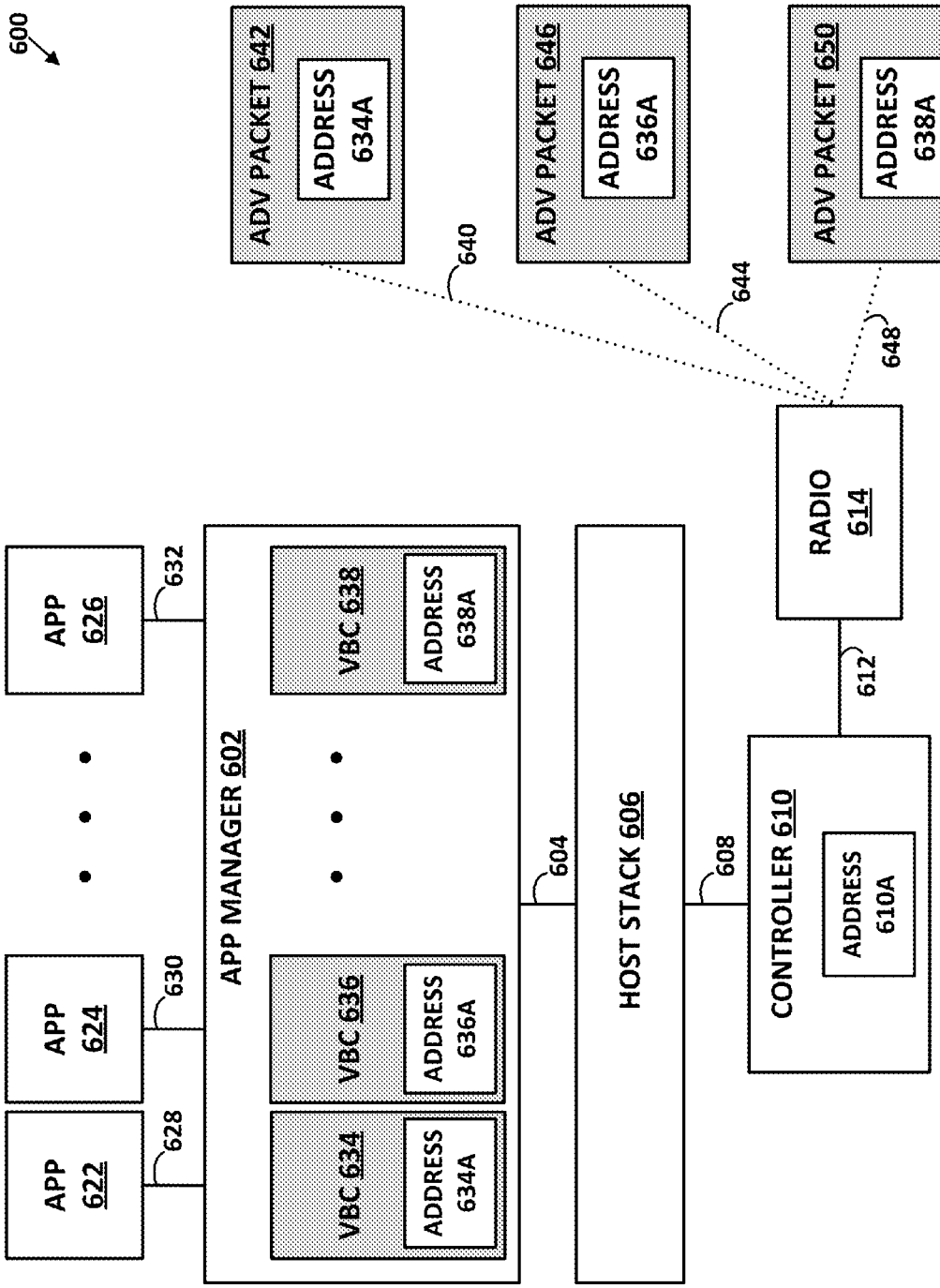
600
ADV PACKET 642
ADDRESS 634A
ADV PACKET 646
ADDRESS 636A
ADV PACKET 650
ADDRESS 638A
640
644
648
RADIO 614
612
APP 626
632
APP 624
630
APP 622
628
APP MANAGER 602
VBC 638
ADDRESS 638A
VBC 636
ADDRESS 636A
VBC 634
ADDRESS 634A
604
HOST STACK 606
608
CONTROLLER 610
ADDRESS 610A

FIG. 6A

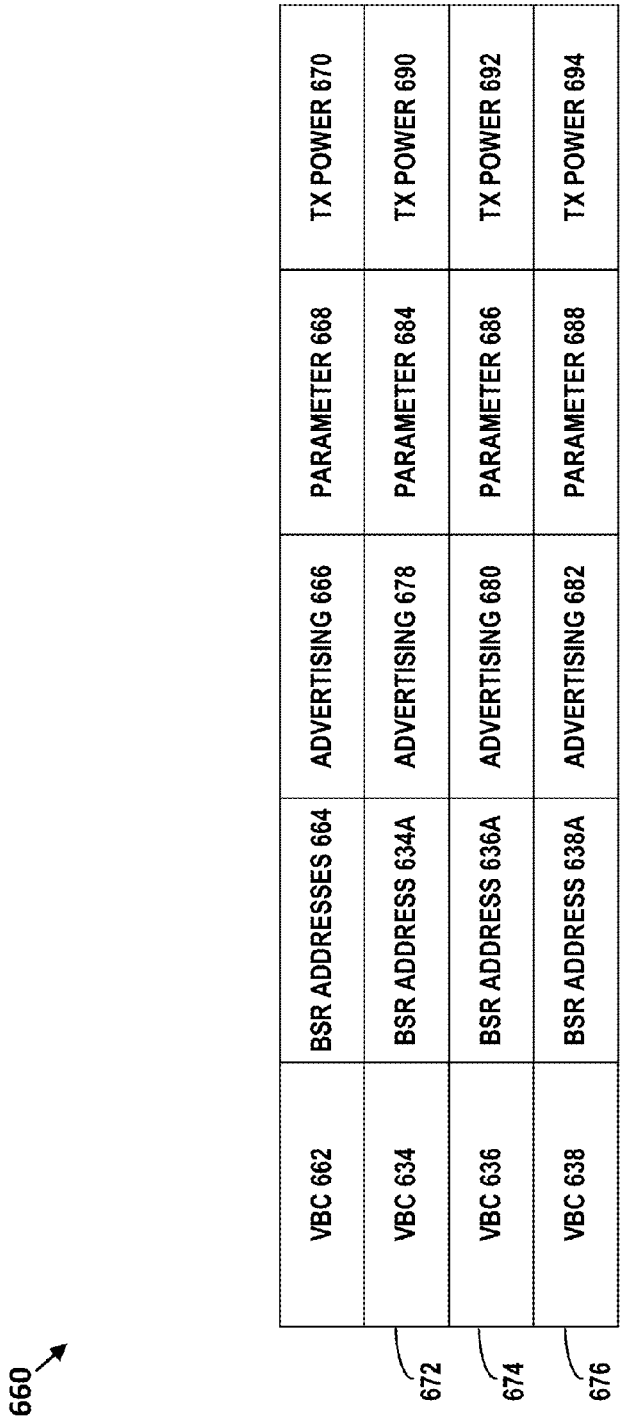
660
VBC 662
BSR ADDRESSES 664
ADVERTISING 666
PARAMETER 668
TX POWER 670
672
VBC 634
BSR ADDRESS 634A
ADVERTISING 678
PARAMETER 684
TX POWER 690
674
VBC 636
BSR ADDRESS 636A
ADVERTISING 680
PARAMETER 686
TX POWER 692
676
VBC 638
BSR ADDRESS 638A
ADVERTISING 682
PARAMETER 688
TX POWER 694

FIG. 6B

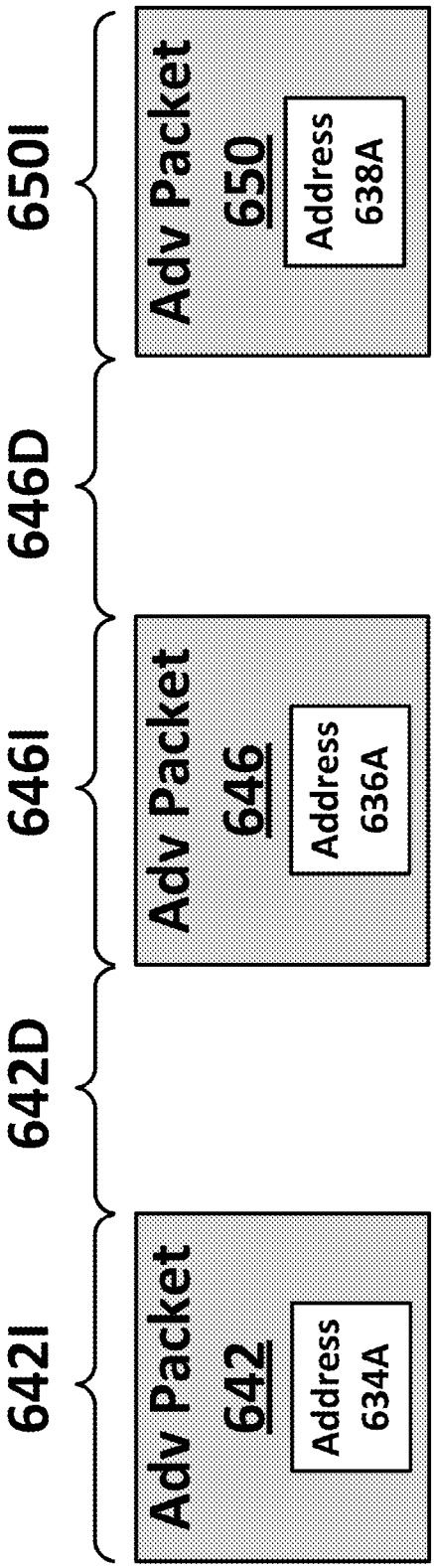
642I
642D
646I
646D
650I
Adv Packet
642
Address
634A
Adv Packet
646
Address
636A
Adv Packet
650
Address
638A

FIG. 6C

VIRTUAL BLUETOOTH CONTROLLER INTERFACES

BACKGROUND

Unless otherwise indicated herein, the materials described in this section are not prior art to the claims in this application and are not admitted to be prior art by inclusion in this section.

Portable computing devices such as personal computers, laptop computers, tablet computers, smart phones, wearable computers, and countless types of Internet-capable devices are prevalent in numerous aspects of modern life. For example, it is common for a single consumer to operate a smartphone, a laptop computer, a keyboard, and a mouse, possibly simultaneously. With an increasing number of consumers operating multiple portable devices, the demand for wireless technology continues to play a role in the use of such portable devices. As such, various forms of wireless technology have evolved to locally connect these portable devices for numerous applications. One wireless technology standard for exchanging data between multiple portable devices is popularly known as Bluetooth.

Bluetooth is commonly used to wirelessly connect a portable device with one or more other portable devices over a short range. For example, Bluetooth may be used to connect a cell phone to a wireless headset, possibly allowing for hands-free use of the phone. In some instances, Bluetooth may also be used to connect the cell phone to the audio speakers and a microphone of a motor vehicle, possibly allowing for hands-free use of the phone while operating the vehicle. Thus, numerous applications have allowed Bluetooth to grow as the standard wire-replacement protocol. In multiple applications, Bluetooth remains particularly attractive due to its low-cost solutions and protocols designed for low power consumption.

SUMMARY

Example embodiments herein disclose methods, computing devices, and computer-readable media capable of creating virtual Bluetooth controller (VBC) interfaces for a number of applications of a Bluetooth device. For example, by creating a VBC interface for each application, an advertising packet may be transmitted for each application of the Bluetooth device in accordance with Bluetooth protocols. As such, multiple advertising packets may be transmitted by the applications to pair the Bluetooth device with multiple other computing devices.

In one example, a method is provided. The method includes determining a number of applications configured to communicate with a Bluetooth device. Further, the method includes determining a number of virtual Bluetooth controller (VBC) interfaces for the number of applications, where the number of VBC interfaces correspond to respective Bluetooth static random (BSR) addresses of a number of BSR addresses. Yet further, the method includes determining one or more advertising packets for the number of VBC interfaces, where the one or more advertising packets include the respective BSR addresses of the number of BSR addresses. In addition, the method includes transmitting, via a radio of the Bluetooth device, the one or more advertising packets for the number of VBC interfaces.

In another example, a Bluetooth device is provided. The Bluetooth device may include a processor and a computer readable medium having stored thereon program instructions that, when executed by the processor, cause the Bluetooth device to perform functions. The functions include determining a number of applications configured to communicate with the Bluetooth device. Yet further, the functions include determining a number of virtual Bluetooth controller (VBC) interfaces for the number of applications, where the number of VBC interfaces correspond to respective Bluetooth static random (BSR) addresses of a number of BSR addresses. In addition, the functions include determining one or more advertising packets for the number of VBC interfaces, where the one or more advertising packets include the respective BSR addresses of the number of BSR addresses. Further, the functions include transmitting, via a radio associated with the Bluetooth device, the one or more advertising packets for the number of VBC interfaces.

In still another example, a computer-readable medium is provided. The computer-readable medium has stored thereon program instructions that, when executed by a processor of a Bluetooth device, cause the Bluetooth device to perform functions. The functions include determining a number of applications configured to communicate with the Bluetooth device. Yet further, the functions include determining a number of virtual Bluetooth controller (VBC) interfaces for the number of applications, where the number of VBC interfaces correspond to respective Bluetooth static random (BSR) addresses of a number of BSR addresses. In addition, the functions include determining one or more advertising packets for the number of VBC interfaces, where the one or more advertising packets include the respective BSR addresses of the number of BSR addresses. Further, the functions include transmitting, via a radio associated with the Bluetooth device, the one or more advertising packets for the number of VBC interfaces.

In still another example, a system is provided. The system may include means for determining a number of applications configured to communicate with a Bluetooth device. Further, the system may include means for determining a number of virtual Bluetooth controller (VBC) interfaces for the number of applications, where the number of VBC interfaces correspond to respective Bluetooth static random (BSR) addresses of a number of BSR addresses. Yet further, the system may include means for determining one or more advertising packets for the number of VBC interfaces, where the one or more advertising packets include the respective BSR addresses of the number of BSR addresses. In addition, the system may include means for transmitting, via a radio associated with the Bluetooth device, the one or more advertising packets for the number of VBC interfaces.

These as well as other aspects, advantages, and alternatives, will become apparent to those of ordinary skill in the art by reading the following detailed description, with reference where appropriate to the accompanying figures.

BRIEF DESCRIPTION OF THE FIGURES

FIG. **1** illustrates an example computing device.

FIG. **2** illustrates a schematic drawing of an example computing device.

FIG. **3** illustrates a schematic drawing of an example networked server cluster.

FIG. **4**A illustrates a schematic drawing of example Bluetooth device.

FIG. **4**B illustrates a schematic drawing of another example Bluetooth device.

FIG. **4**C illustrates an example advertising packet.

FIG. **5** illustrates a flow diagram of an example method for determining a number of Virtual Bluetooth Controller (VBC) interfaces.

FIG. **6**A illustrates a schematic drawing of yet another example Bluetooth device.

FIG. **6**B illustrates an example data table of VBC interfaces.

FIG. **6**C illustrates example advertising packets.

DETAILED DESCRIPTION

The following detailed description describes various features and functions of the disclosed methods, computing devices, and systems with reference to the accompanying figures. In the figures, similar symbols identify similar components, unless context dictates otherwise. The illustrative methods, computing devices, and systems embodiments described herein are not meant to be limiting. It may be readily understood that certain aspects of the disclosed methods, computing devices, and systems can be arranged and combined in a wide variety of different configurations, all of which are contemplated herein.

I. Overview

As noted, Bluetooth continues to grow as a wire-replacement protocol and remains particularly attractive due to its protocols designed for low power consumption. In particular, Bluetooth Low Energy (BLE) provides protocols for low power devices to communicate with multiple other computing devices. For example, consider a smartwatch that can be powered by one or more coin cell batteries. Further, consider that the smartwatch utilizes BLE's protocols for communicating with other computing devices such as a wireless headset. For example, a music-playing application on the smartwatch may stream music to the wireless headset. In particular, BLE's protocols may include a BLE advertising protocol (possibly referred to herein as an "advertising protocol"). As such, the smartwatch may "advertise" or announce its presence to other computing devices such as the wireless headset. Further, the smartwatch may "pair" or connect with the wireless headset for streaming music to the wireless headset. As such, advertising protocols may be designed to allow the smartwatch to pair with the wireless headset, while maintaining the smartwatch's low power consumption.

There are several other advantages to BLE's advertising protocols. For example, considering the scenario above, the smartwatch may pair with the wireless headset faster using advertising protocols than by using other protocols. In particular, advertising protocols may be fixed to three channels of the 802.11 frequency range, e.g., the 2.4 GHz frequency range. Thus, without scanning the entire 2.4 GHz frequency range, the wireless headset may receive advertising packets from the smartwatch over the three fixed channels. In particular, the wireless headset may receive BLE advertising packets faster.

Yet, one of the challenges of using advertising protocols is related to possible limitations of the advertising packets. For example, consider another scenario in which the smartwatch has both a music-playing application and a keyboard application. The keyboard application may allow a user to type words into a wireless keyboard such that the typed words may appear on the display of the smartwatch, possibly for typing notes. In such instances, the smartwatch may attempt to send a single advertising packet to both the wireless headset and a wireless keyboard, possibly for advertising the music-playing application and the keyboard application, respectively. Yet, the advertising packet may have a data limitation of 31 bytes and therefor, the packet may have limited space for data in the advertising packet. As such, the packet may be limited to advertising for just one application, either the music-playing application or the keyboard application.

Another challenge may be related to the smartwatch having a single Bluetooth controller with a single Bluetooth static random (BSR) address for sending advertising packets. For example, considering the scenario above, the smartwatch may send a first advertising packet to advertise for the music-playing application and a second advertising packet to advertise for the keyboard application. Since the single controller of the smartwatch may be limited to a single BSR address, the smartwatch may encounter additional difficulties when attempting to pair the smartwatch to both the wireless headset and the wireless keyboard.

In particular, once the wireless headset receives the first advertising packet, the smartwatch may begin the pairing process with the wireless headset using the single BSR address. Further, once the portable keyboard receives the second advertising packet, the smartwatch may begin the pairing process with the wireless keyboard also using the single BSR address. Thus, since the smartwatch may attempt to pair with both the wireless headset and the wireless keyboard using the same BSR address, the smartwatch may encounter difficulties in differentiating the data from the wireless headset and the data from the wireless keyboard.

Example embodiments herein disclose methods for creating virtual Bluetooth controller (VBC) interfaces for a number of applications of a Bluetooth device. For example, by creating a VBC interface for each application, an advertising packet may be transmitted for each application of the Bluetooth device. As such, multiple advertising packets may be transmitted by the applications to pair the Bluetooth device with multiple other computing devices. For example, a single advertising device, e.g., the smartwatch, may send multiple advertising packets for a number of applications, e.g., the music-playing application and the keyboard application.

Further, each of the VBC interfaces may enable the smartwatch to send advertising packets, where each advertisement packet may be assigned a unique BSR address. Thus, the listening devices, e.g., the wireless headset and the portable keyboard, may perceive each advertising packet as being sent from a different advertising device. As such, the smartwatch may advertise and pair with multiple listening devices. Thus, the smartwatch may enable both the music-playing application for streaming music, the keyboard application for typing information into the smartwatch, as well as other applications on the smartwatch in additional contexts.

II. Introduction

FIG. **1** illustrates an example computing device. As shown in scenario **100** of FIG. **1**, computing device **102** may be a smart phone, computing device **104** may be a digital television or a monitor, computing device **106** may be a tablet computer, and computing device **108** may be another smart phone. Yet, it should be understood that arrangements for computing devices **102** through **108** are provided in FIG. **1** for purposes of illustration only. For example, computing device **102** may also be the smartwatch as described in the scenarios above, among other types of wearable computing devices. In addition, in some instances, computing devices **102** may be a laptop computer, a tablet computer, and/or a human-interface device, among other possibilities. As such, the computing device **102** may, for example, take the form of any of the computing devices described above in relation to determining virtual Bluetooth controller (VBC) interfaces for a number of applications.

Further, as shown in FIG. **1**, computing device **102** may pair or connect with a number of other computing devices. For example, computing device **102** may pair or connect to computing device **104** through connection **110**. Further, computing device **102** may also pair or connect with computing

device **106** through connection **112**. Yet further, computing **102** may also pair or connect with computing device **108** through connection **114**. In addition, connections **110**, **112**, and **114** may be point-to-point wireless connections such as BLUETOOTH® connections and/or Bluetooth Low Power Energy (LPE) connections, among other types of connections.

In some instances, computing device **102** may determine a number of applications. For example, applications **116**, **118**, and **120** may, for example, be downloaded on computing device **102**. In some instances, application **116** may be a video-playing application for streaming videos from computing device **102** to computing device **104**, possibly for displaying the videos on a larger display of computing device **104**. Further, application **118** may be a presentation application, a word application, and/or a spreadsheet application for sending information from computing device **102** to computing device **106**, possibly for modifying the information using the graphical user interface (GUI) of computing device **106** and/or the pointing device illustrated with computing device **106**. Yet further, application **120** may be a smart phone application for transmitting phone data between computing device **102** and computing device **108**.

FIG. **2** illustrates a schematic drawing of an example computing device. In some instances, computing device **200** may, for example, take the form of any computing devices, e.g., Bluetooth devices, described above in relation to FIG. **1**. Further, computing device **200** may be configured to perform the methods and functions described herein. In this example, computing device **200** includes a processor **202**, a data storage **204**, a network interface **206**, and an input/output function **208**, all of which may be coupled by a system bus **210** or a similar mechanism. Processor **202** can include one or more CPUs, such as one or more general purpose processors and/or one or more dedicated processors (e.g., application specific integrated circuits, digital signal processors, network processors, etc.).

Data storage **204**, in turn, may comprise volatile and/or non-volatile data storage and can be integrated in whole or in part with processor **202**. Data storage **204** can hold program instructions, executable by processor **202**, and data that may be manipulated by these instructions to carry out the various methods, processes, or functions described herein. Alternatively, these methods, processes, or functions can be defined by hardware, firmware, and/or any combination of hardware, firmware and software. By way of example, the data in data storage **204** may contain program instructions, perhaps stored on a non-transitory, computer-readable medium, executable by processor **202** to carry out any of the methods, processes, or functions disclosed in this specification or the accompanying drawings.

Network interface **206** may take the form of a wireless connection, such as BLUETOOTH®. In particular, network interface **206** may enable one or more Bluetooth standards or protocols, including BLE protocols and related advertising protocols. Further, network interface **206** may include a radio for transmitting advertising packets to other computing devices. For example, referring back to FIG. **1**, computing device **102** may also include a network interface, such as network interface **206**, to pair with computing devices **104**, **106**, and **108**. In addition, network interface **206** may take the form of other wireless connections such as IEEE 802.11 (Wi-Fi), or a wide-area wireless connection. Further, other forms of physical layer connections and other types of standard or proprietary communication protocols may be used over network interface **206**. Yet further, network interface **206** may comprise multiple physical interfaces. Further, network interface **206** may take the form of a wireline connection, such as an Ethernet connection.

Input/output function **208** may facilitate user interaction with computing device **200**. Input/output function **208** may comprise multiple types of input devices, such as a keyboard, a mouse, a touch screen, and so on. Similarly, input/output function **208** may comprise of multiple types of output devices, such as a screen, monitor, printer, or one or more light emitting diodes (LEDs). Additionally or alternatively, example computing device **200** may support remote access from another device, via network interface **206** or via another interface (not shown), such as a universal serial bus (USB) or high-definition multimedia interface (HDMI) port.

In some embodiments, the computing device **200** may include a device platform or operating system (not shown). In some instances, the device platform and/or the operating system may be compatible with Bluetooth protocols, Bluetooth Low Energy (BLE) protocols, and/or BLE advertising protocols. In some instances, the device platform and/or the operating system may be configured as a multi-layered Linux platform or operating system. The device platform may include different applications and an application framework, as well as various kernels, libraries, and runtime entities. In other examples, other formats or systems may operate the computing device **200** as well.

In some embodiments, one or more computing devices may be deployed in a networked architecture, possibly as illustrated in FIG. **1**. The exact physical location, connectivity, and configuration of the computing devices may be unknown and/or unimportant to other computing devices. Accordingly, the computing devices in FIGS. **1** and **2** may be referred to as "cloud-based" devices that may be housed at various remote locations.

FIG. **3** illustrates a schematic drawing of an example networked server cluster. In particular, server devices **306** may, for example, take the form of any computing devices, e.g., Bluetooth devices, described above in relation to FIGS. **1** and **2**. In FIG. **3**, functions of computing device **200** may be distributed between server devices **306**, cluster data storage **308**, and cluster routers **310**, all of which may be connected by local cluster network **312**. The number of server devices **306**, cluster data storages **308**, and cluster routers **310** in server cluster **304** may depend on the computing task(s) and/or applications assigned to server cluster **304**.

For example, server devices **306** may be configured to perform various computing tasks of computing device **200**. Thus, computing tasks can be distributed among one or more of server devices **306**. To the extent that these computing tasks can be performed in parallel, such a distribution of tasks may reduce the total time to complete these tasks and return a result.

Cluster data storage **308** may be data storage arrays that include disk array controllers configured to manage read and write access to groups of hard disk drives. The disk array controllers, alone or in conjunction with server devices **306**, may also be configured to manage backup or redundant copies of the data stored in cluster data storage **308** to protect against disk drive failures or other types of failures that prevent one or more of server devices **306** from accessing units of cluster data storage **308**.

Cluster routers **310** may include networking equipment configured to provide internal and external communications for the server clusters. For example, cluster routers **310** may include one or more packet-switching and/or routing devices configured to provide (i) network communications between server devices **306** and cluster data storage **308** via cluster

network **312**, and/or (ii) network communications between the server cluster **304** and other devices via communication link **302** to network **300**.

Additionally, the configuration of cluster routers **310** can be based at least in part on the data communication requirements of server devices **306** and cluster data storage **308**, the latency and throughput of the local cluster networks **312**, the latency, throughput, and cost of communication link **302**, and/or other factors that may contribute to the cost, speed, fault-tolerance, resiliency, efficiency and/or other design goals of the system architecture.

FIG. **4**A illustrates a schematic drawing of an example Bluetooth device. In particular, Bluetooth device **400** may, for example, be combined with any of the computing devices, e.g., Bluetooth devices, described in the scenarios above. In some instances, Bluetooth device **400** may be incorporated into any of the computing devices described above, possibly as a Bluetooth module among other modules in a respective computing device. For example, as in the scenarios above, Bluetooth device **400** may be incorporated into the smartwatch for sending advertising packets to the wireless headset and the portable keyboard.

In this example, Bluetooth device **400** includes application manager **402**, host stack **406**, controller **410**, and radio **414**. In particular, application manager **402** may be coupled to host stack **406** by system bus **404** or a similar mechanism. Further, host stack **406** may be coupled to controller **410** by system bus **408** or a similar mechanism. Yet further, controller **410** may be coupled to radio by system bus **412** or similar mechanism.

Controller **410** may include a physical Bluetooth controller interface. Further, the physical Bluetooth controller interface may correspond to physical Bluetooth static random (BSR) address **410**A, possibly for transmitting an advertising packet for an application downloaded on the Bluetooth device **400**. For example, referring back to the scenarios above, consider that Bluetooth device **400** is incorporated with the smartwatch. As such, the music-playing application may be downloaded to Bluetooth device **400**. Further, controller **410** may correspond to BSR address **410**A for transmitting an advertising packet for the music-playing application.

In some embodiments, BSR address **410**A may be 48-bit randomly generated addresses. For example, BSR address **410**A may meet a number of requirements. For example, the two most significant bits of the BSR address may be equal to '1'. Further, bits of the random part of the BSR address may or may not be equal to '1'. In addition, bits of the random part of the BSR address may or may not be equal to '0'.

Bluetooth device **400** may operate in different modes depending on the functionality. In some instances, the functionality of Bluetooth device **400** may be controlled by a user of Bluetooth device **400**. Considering the scenarios above, the user may provide an input to computing device **200**, possibly the smartwatch that may be combined with Bluetooth device **400**. In particular, the user may provide an input to input/output function **208**, possibly a graphical user-interface (GUI), to initiate the music-playing application and stream music to a wireless headset. As such, the operating modes of Bluetooth **400** may include an advertising mode among other possible modes.

In some embodiments, the advertising mode involves Bluetooth device **400** transmitting advertising packets. In some instances, such advertising packets may be received by one or more listening devices. Further, such listening devices may receive the advertising packets and request more information from Bluetooth device **400**. As such, Bluetooth device **400** may respond with more information upon such requests from these listening devices. In addition, Bluetooth **400** may have other modes such as a scanning mode, a master device mode, and a slave device mode. In some embodiments, the scanner mode involves other devices listening for advertising packets transmitted by other devices.

In some embodiments, the Bluetooth device **400** may be in advertisement mode to establish a connection with another computing device. For example, referring again to the scenarios above, consider that Bluetooth device **400** is combined with the smartwatch. As such, the wireless headset may scan for advertising packets sent by Bluetooth device **400**. Upon receiving the advertising packet, the wireless headset may send a pairing request to Bluetooth device **400**. Once a connection is established for pairing the wireless headset with Bluetooth device **400**, the wireless headset may become the slave device and the Bluetooth device **400** may become the master device.

FIG. **4**B illustrates a schematic drawing of another example Bluetooth device. In particular, Bluetooth device **420** may, for example, take the form of any of the computing devices, e.g., Bluetooth devices, described above in relation to FIGS. **1** through **4**A. For example, in relation to FIG. **4**A, Bluetooth device **420** of FIG. **4**B also includes application manager **402**, host stack **406**, controller **410**, and radio **414**. Further, application manager **402** may be coupled to host stack **406** by system bus **404** or a similar mechanism. Further, host stack **406** may be coupled to controller **410** by system bus **408** or a similar mechanism. Yet further, controller **410** may be coupled to radio by system bus **412** or similar mechanism.

Applications **422**, **424**, and **426** may be downloaded on Bluetooth device **420** and/or on a computing device combined with Bluetooth device **420**. In some instances, applications **422**, **424**, and **426** may, for example, take the form of any applications described above, possibly in relation to FIGS. **1** through **4**A. For example, applications **422**, **424**, and **426** may take the forms of applications **116**, **118**, and **120**, respectively, as described above in relation to FIG. **1**. Further, applications **422**, **424**, and **426** may exchange advertisement data with application manager **402** through application interfaces **428**, **430**, and **432**, respectively. Further, additional applications may attempt to exchange advertisement data with application manager **402**, as illustrated by the ellipses between applications **424** and **426**. Yet further, applications **422**, **424**, and **426** may communicate with application manager **402** to exchange advertising packets with other devices (not shown in FIG. **4**).

In some embodiments, Bluetooth device **420** may enter advertisement mode to transmit one or more advertising packets over the air for applications **422**, **424**, and **426**. As noted in relation to FIG. **4**A, controller **410** of FIG. **4**B may be assigned a single Bluetooth static address **410**A for transmitting advertising packets to other computing devices. For example, Bluetooth device **420** may create advertising packet **436** that includes BSR address **410**A. As such, advertising packet **436** may be transmitted by radio **414**, possibly for a number of applications **422**, **424**, and **426**. For example, consider that application **422** is a music-playing application. In such instances, advertisement packet **436** may be transmitted to a wireless headset for pairing Bluetooth device **420** with the wireless headset. As such, music data from application **422** may be streamed to the wireless headset.

FIG. **4**C illustrates an example advertising packet. In particular, advertising packet **440** may, for example, take the form of any advertising packets described above in relation to the FIGS. **1** through **4**B. As shown in FIG. **4**C, advertising packet **440** may include preamble **442**, access address **444**,

payload data unit (PDU) **446** with approximately 2 to 39 bytes, and cyclic redundancy check (CRC) **448**.

In addition, PDU **446** may include header **450** and advertisement payload **452** with approximately 6 to 37 bytes. Further, advertisement payload **452** may include header **454**, MAC address **456**, and advertising data **458** with approximately up to 31 bytes. As noted in the scenarios above, this 31 byte space may limit the quantity or amount of advertisement data that may be transmitted for applications **422**, **424**, and **426**. For example, in some instances, computing device **420** may transmit a single advertising packet **436** for possibly one or two of applications **422**, **424**, and **426**, possibly due to the 31 byte limitation. In particular, the 31 byte space may provide enough space for the advertising data of applications **422** and **424**, but possibly not application **426**. Yet, in some instances, additional applications may be present as illustrated by the ellipses between applications **424** and **426** in FIG. **4**B. As such, additional applications may encounter delays to transmit advertisement data due to the 31 byte space limitation.

In some instances, the single BSR address **410**A of Bluetooth device **420** may also limit the advertisement data that may be transmitted for applications **422**, **424**, and **426**. For example, consider that application **422** may be a music-playing application. As such, Bluetooth device **420** may send advertising packet **436** with the BSR address **410**A, possibly to pair with a wireless headset and stream music to the wireless headset. Yet, Bluetooth device **420** may send a second advertising packet (not shown in FIGS. **4**B and **4**C) with the same BSR address **410**A to pair with a wireless keyboard. As such, since the same BSR address **410**A may be used in both pairing processes with the wireless headset and the wireless keyboard, the Bluetooth device **420** may be unable to differentiate data between the two pairing processes.

Further, for example, the wireless headset may receive both the first and second advertising packets, possibly disrupting a pairing process for the wireless headset. In particular, the wireless headset may receive the first and second advertisement packets such that each packet corresponds to the same BSR address **410**A. As such, in some instances, the wireless headset may begin pairing with Bluetooth device **420** in response to the first advertisement. Further, the wireless headset may receive the second advertisement packet that may disrupt the pairing process initiated by the first advertisement packet.

III. Example Methods, Computing Devices, and Systems

FIG. **5** illustrates a flow diagram of an example method for determining a number of Virtual Bluetooth Controller (VBC) interfaces. In particular, method **500** of FIG. **5** may be carried out or implemented by one or more of the computing devices described above in relation to FIGS. **1** through **4**C. For example, method **500** may be carried out by computing device **102** in FIG. **1** to send advertising packets to possibly pair with computing devices **104**, **106**, and **108**. Further, methods **500** may include one or more steps, processes, and/or functions as illustrated by one or more of blocks **502** through **508**. Although the blocks are illustrated in a sequential order, a number of these blocks may also be performed simultaneously and/or in a different order than the one or more orders illustrated. Also, the various blocks may be combined into fewer blocks, divided into additional blocks, and/or removed based upon specific implementations.

At block **502**, the method **500** includes determining a number of applications configured to communicate with a Bluetooth device. As shown in FIG. **4**B, a number of applications **422**, **424**, and **426** may be determined to communicate with Bluetooth device **420**. As noted for FIG. **4**B, applications **422**, **424**, and **426** may be downloaded on Bluetooth device **420**. Further, application manager **420** may determine applications **422**, **424**, and **426** are configured to communicate with application manager through application interfaces **428**, **430**, and **432**, respectively.

At block **504**, the method **500** further includes determining a number of virtual Bluetooth controller (VBC) interfaces for the number of applications, where the number of VBC interfaces correspond to respective Bluetooth static random (BSR) addresses of a number of BSR addresses. In some embodiments, each of the number VBC interfaces may correspond to a respective application of the number of applications.

For example, referring to FIG. **4**B, a number of VBC interfaces (not shown in FIG. **4**B) may be determined for at least one of the number of applications **422**, **424**, and **426**, where the number of VBC interfaces correspond to respective BSR addresses of a number of BSR addresses, possibly including BSR address **410**A. In some instances, each of the number of VBC interfaces may correspond to a respective application of the number of applications **422**, **424**, and **426**.

At block **506**, the method **500** further includes determining one or more advertising packets for the number of VBC interfaces, where the one or more advertising packets include the respective BSR addresses of the number of BSR addresses. As shown in FIG. **4**B, one or more advertisement packets, e.g., advertising packet **436**, may be determined for the number of VBC interfaces (not shown in FIG. **4**B). In some instances, each of the one or more advertisement packets may include the respective addresses of the number of BSR addresses, possibly including BSR address **410**A.

At block **508**, the method **500** further includes transmitting, via a radio of the Bluetooth device, the one or more advertising packets for the number of VBC interfaces. As shown in FIG. **4**B, radio **414** may transmit the one or more advertising packets, e.g., advertising packet **436**, for the number of VBC interfaces (not shown in FIG. **4**B).

As such, example methods herein allow for creating VBC interfaces for a number of applications **422**, **424**, and **426** of Bluetooth device **420**. For example, by creating a VBC interface for each application **422**, **424**, and **426**, an advertising packet may be transmitted for each application of the Bluetooth device **400** in accordance with Bluetooth protocols. As such, multiple advertising packets, including advertisement packet **436**, may be transmitted for applications **422**, **424**, and **426** to pair Bluetooth device **400** with multiple other computing devices.

It should be noted that method **500** and other steps, processes, and/or functions disclosed herein show possible implementations of example embodiments. In this regard, each block in FIG. **5** may correspond to hardware, chipsets, and/or circuitry that are designed or wired to perform the specific logical functions in method **500**. Further, each block in method **500** may represent a module, a segment, or a portion of program code, which includes one or more instructions executable by a processor for implementing specific logical functions or steps in the process. The program code may be stored on any type of computer readable medium, for example, such as a storage device including a disk or hard drive.

The computer readable medium may include a non-transitory computer readable medium, for example, such as computer-readable media that stores data for short periods of time like register memory, processor cache and Random Access Memory (RAM). The computer readable medium may also include non-transitory media, such as secondary or persistent long term storage, like read only memory (ROM), optical or magnetic disks, compact-disc read only memory (CD-ROM),

for example. The computer readable media may also be any other volatile or non-volatile storage systems. The computer readable medium may be considered a computer readable storage medium, a tangible storage device, or other article of manufacture, for example. In addition,

As noted, method **500** and other steps, processes, and/or functions disclosed herein show possible implementations of example embodiments. Thus, the steps of method **500** are explained further in the following paragraphs. In particular, the steps of method **500** may be described in further detail in relation to FIG. **6**A through **6**C.

FIG. **6**A illustrates a schematic drawing of yet another example Bluetooth device. In particular, Bluetooth device **600** may, for example, take the form of any of the computing devices, e.g., Bluetooth devices, described above in relation to FIGS. **1** through **5**. For example, application manager **602**, host stack **606**, controller **610**, and radio **614** may be similar or substantially similar to application manager **402**, host stack **406**, controller **410**, and radio **414**, respectively, in relation to FIGS. **4**A and **4**B. Further, application manager **602** may be coupled to host stack **606** by system bus **604** or a similar mechanism. Further, host stack **606** may be coupled to controller **610** by system bus **608** or a similar mechanism. Yet further, controller **610** may be coupled to radio by system bus **612** or similar mechanism.

Further, applications **622**, **624**, and **626** may, for example, take the forms of any of the applications described above in relation to FIGS. **1** through **5**. For example, applications **622**, **624**, and **626** may be similar or substantially similar to applications **422**, **424**, and **426**, respectively, in relation to FIGS. **4**A and **4**B. In some instances, a number of VBC interfaces **634**, **636**, and **638** may be created in application manager **602** for applications **622**, **624**, and **626**, respectively. In addition, VBC interfaces **634**, **636**, and **638** may include BSR addresses **634**A, **636**A, and **638**A, respectively.

In some embodiments, BSR addresses **610**A, **634**A, **636**A, and **638**A may take the form of any of the BSR addresses described above in relation to FIGS. **1** through **5**. For example, BSR addresses **610**A, **634**A, **636**A, and **638**A may be 48-bit randomly generated addresses. Further, BSR addresses **610**A, **634**A, **636**A, and **638**A may meet the number of requirements described above such that the two most significant bits of the BSR addresses may be equal to '1', bits of the random part of the BSR address may or may not be equal to '1', and bits of the random part of the BSR address shall may or may not be equal to '0'.

In some embodiments, Bluetooth device **600** may create advertising packets **642**, **646**, and **650**. Further, advertising packets **642**, **646**, and **650** may, for example, take the forms of any advertising packet described above in relation to FIGS. **1** through **5**. Yet further, Bluetooth device **600** may enter advertisement mode to transmit one or more of advertising packets **642**, **646**, and **650** over the air in any manner described above in relation to FIGS. **1** through **5**. Yet further, radio **614** may transmit advertising packets **642**, **646**, and **650** that include BSR addresses **634**A, **636**A, and **638**A, respectively. In addition, advertising packets **642**, **646**, and **650** may be transmitted over channels **640**, **644**, and **648**, respectively.

Referring back to block **502** of FIG. **5**, a number of applications **622**, **624**, and **626** of FIG. **6**A configured to communicate with Bluetooth device **600** may be determined. In particular, applications **622**, **624**, and **626** may be downloaded on Bluetooth device **600** and/or on a computing device combined with Bluetooth device **600**. Further, applications **622**, **624**, and **626** may exchange advertisement data with application manager **602** through application interfaces **628**, **630**, and **632**, respectively. Further, additional applications may attempt to exchange advertisement data with application manager **602**, as illustrated by the ellipses between applications **624** and **626**. Yet further, applications **622**, **624**, and **626** may communicate with application manager **602** to exchange advertising packets with other devices (not shown in FIG. **6**).

In some embodiments, applications may request to advertise information. For example, at least one of applications **622**, **624**, and **626** may request to transmit advertising packets **642**, **646**, and **650**, respectively. As such, at least one of applications **622**, **624**, and **626** may request a "BluetoothLeAdvertiser" instance object from Bluetooth device **600** through a Bluetooth application programming interface (API) of the operating system. In some instances, a BluetoothLeAdvertiser (herein referred to as the "BluetoothLeAdvertiser instance" for illustrative purposes) maybe an instance, object, and/or an instance object. Further, the BluetoothLeAdvertiser instance may be created from classes by subroutines, constructors, and/or other programming functions. As such, the BluetoothLeAdvertiser instance may handle one or more of the Bluetooth Low Energy advertisement functions for applications **622**, **624**, and **626**.

In some embodiments, the number of applications requesting to advertise information may be compared with a number or a maximum number of VBC interfaces. For example, during initialization of host stack **606**, the host stack **606** may query controller **610** for a number of VBC interfaces currently simulated by controller **610** or a maximum number of VBC interfaces that controller **610** may simulate, possibly for time-sharing radio **614** to transmit packets **642**, **646**, and **650**. As such, host stack **606** may save this number as "max_advertiser". Further, Bluetooth device **600** may initialize a variable "advertiser_count" to compare with the max_advertiser. Yet further, the number of applications **622**, **624**, and **626** may be represented in advertiser_count and compared with max_advertiser. For example, applications **622**, **624**, and **626** may be represented as the three applications in the advertiser_count variable and this sum of three applications may be compared with 15 maximum applications represented in the max_advertiser variable. Since advertiser_count is less than max_advertiser, additional VBC interfaces may be created for advertising packets.

In some embodiments, one or more requests by the applications to transmit advertising packets may be granted. For example, Bluetooth device **600** may grant a request from at least one of applications **622**, **624**, and **626** to advertise information. Thus, Bluetooth device **600** may increment or add one to the advertiser_count. Further, in instances where advertiser_count is less than the max_advertiser, Bluetooth device **600** may continue granting additional requests from applications **622**, **624**, and **626**, among other applications. In some instances, advertiser_count may reach the number represented as the max_advertiser. In such instances, Bluetooth device **600** may reject additional requests for BluetoothLeAdvertiser instances. Yet further, in some embodiments, a "BluetoothLeAdvertiser#close" call may reset or recycle the BluetoothLeAdvertiser and set the advertiser_count variable to zero.

FIG. **6**B illustrates an example data table of VBC interfaces. In particular, data table **660** may, for example, be stored in any of the computing devices described above in relation to FIGS. **1** through **6**A. Further, data table **660** may include data categories such as VBC data **662**, BSR address data **664**, advertising data **666**, parameter data **668**, and transmitting power **670** that may, for example, include data or representations of data described above in relation to FIGS. **1** through **6**A.

In some instances, applications may initiate advertising functions. For example, a number of applications **622**, **624**, and **626** of FIG. **6**A may call the "BluetoothLeAdvertiser#startAdvertise" instance and host stack **606** may send a command to controller **610**. In some instances, this command may send data entries **672**, **674**, and **676** to controller **610**. As such, controller **610** may maintain data table **660** including data category VBC data **662** that may also include VBC interface data **634**, **636**, and **638**.

In particular, data entry **672** may include VBC interface data **634** and BSR address data **634**A indicative of VBC interface **634** and BSR address **634**A of FIG. **6**A, respectively. Further, data entry **672** may include advertising data **678** for advertising application **622** to other computing devices. Yet further, data entry **672** may include advertising parameter data **684** and transmission power data **690** for transmitting advertising packet **642** of FIG. **6**A.

Further, data entry **674** may include VBC interface data **636** and BSR address data **636**A indicative of VBC interface **636** and BSR address **636**A of FIG. **6**A, respectively. Further, data entry **674** may include advertising data **680** for advertising application **624** to other computing devices. Yet further, data entry **674** may include advertising parameter data **686** and transmission power data **692** for transmitting advertising packet **646** of FIG. **6**A.

Yet further, data entry **676** may include VBC interface data **638** and BSR address data **638**A indicative of VBC interface **638** and BSR address **638**A of FIG. **6**A, respectively. Further, data entry **676** may include advertising data **682** for advertising application **626** to other computing devices. Yet further, data entry **676** may include advertising parameter data **688** and transmission power data **694** for transmitting advertising packet **650** of FIG. **6**A.

Referring back to block **504** of FIG. **5**, a number virtual Bluetooth controller (VBC) interfaces **634**, **636**, and **638** of FIG. **6**A may be determined for the number of applications **622**, **624**, and **626**, where the number of VBC interfaces **634**, **636**, and **638** correspond to respective Bluetooth static random (BSR) addresses of a number BSR addresses **634**A, **636**A, and **638**A, respectively. Further, controller **610** may also include a physical Bluetooth controller (PBC) interface. In particular, the PBC interface corresponds to BSR address **610**A that differs from addresses **634**A, **636**A, and **638**A. Yet, method **500** may further include associating the PBC interface for one of applications **622**, **624**, and **626**. In particular, an advertisement packet with BSR address **610** may be transmitted to advertise for any of the number applications **622**, **624**, and **626**.

In some embodiments, a number VBC interfaces may be determined by the BluetoothLeAdvertiser instance. In particular, the BluetoothLeAdvertiser instance may determine or establish dedicated VBC interfaces **634**, **636**, and **638** for applications **622**, **624**, and **626**, respectively. Further, each of VBC interfaces **634**, **636**, and **638** may be provided with a dedicated BSR addresses **634**A, **636**A, and **638**A, respectively. In some instances, VBC interfaces **634**, **636**, and **638** may take the form of BluetoothLeAdvertiser Java instances.

In some embodiments, the number VBC interfaces may be determined by a number of applications. As noted, applications may request to advertise information, possibly to transmit advertising packets. For example, applications **622**, **624**, and **626** may request host stack **606** to create VBC interfaces for each application. In some instances, host stack **606** may grant a VBC interface to each of applications **622**, **624**, and **626** if VBC interfaces are available. In particular, VBC interfaces may be granted as long as advertiser_count is less than max_advertiser.

In some embodiments, a number VBC interfaces may be determined using a data table. Referring back to FIG. **6**B, data table **660** may be used to determine VBC interface data **634**, **636**, and **638** for at least one of the number of applications **622**, **624**, and **626**. In some instances, VBC interfaces **634**, **636**, and **638** may be determined for applications **622**, **624**, and **626**, respectively. In particular, VBC interface data **634**, **636**, and **638** may be entered in table **660** for the applications **622**, **624**, and **626** of FIG. **6**A, respectively. Further, BSR address data **634**A, **636**A, and **638**A may be entered in table **660** for BSR addresses **634**A, **636**A, and **638**A, respectively.

Referring back to block **506** of FIG. **5**, one or more advertising packets **642**, **646**, and **650** of FIG. **6**A may be determined for a number VBC interfaces **634**, **636**, and **638**, respectively, where each of the one or more advertising packets **642**, **646**, and **650** include the respective BSR addresses of the number of BSR addresses **634**A, **636**A, and **638**A.

In some embodiments, one or more advertising packets may be determined by at least one of a number of applications. Referring back to FIG. **6**A, applications **622**, **624**, and **626** may request a BluetoothLeAdvertiser instance from Bluetooth device **600** to set up advertising packets **622**, **624**, and **626**. Further, applications **622**, **624**, and **626** may set up advertising packets **642**, **646**, and **650**, respectively, by calling a "BluetoothLeAdvertiser#setData" instance.

In particular, by calling the BluetoothLeAdvertiser#setData, each of advertising packets **642**, **646**, and **650** may, for example, be set up to take the form of advertising packet **440**, among other packets described above in relation to FIGS. **1** through **5**. Further, applications **622**, **624**, and **626** may call a BluetoothLeAdvertiser#startAdvertise instance after setting up the data, possibly to advertise or transmit advertising packets **642**, **646**, and **650** through radio **614**.

In some embodiments, one or more advertising packets may be determined using a data table. For example, data table **660** of FIG. **6**B may be used to determine one or more of advertising packets **642**, **646**, and **650** of FIG. **6**A. As noted, the one or more of advertising packets **642**, **646**, and **650** may be determined for the number of VBC interfaces **634**, **636**, and **638**, respectively. In addition, each of advertising packets **642**, **646**, and **650** may include BSR address data **634**A, **636**A, and **638**A of FIG. **6**B, respectively.

Referring back to block **508** of FIG. **5**, one or more advertising packets **642**, **646**, and **650** of FIG. **6**A may be transmitting for the number of VBC interfaces **634**, **636**, and **638**, via radio **614** of the Bluetooth device **600**. In particular, advertising packets **642**, **646**, and **650** may, for example, be transmitted in any manner described above in relation to FIGS. **1** through **6**A. For example, advertising packets **642**, **646**, and **650** may be transmitted on channels **640**, **644**, and **648**, respectively. In some instances, channels **640**, **644**, and **648** may be channels **37**, **38**, and **39** of a Bluetooth spectrum. Further, channels **640**, **644**, and **648** may correspond to 2.402 GHz, 2.426 GHz, and 2.480 GHz frequencies, respectively. Further, advertising packets **642**, **646**, and **650** may be transmitted including addresses **634**A, **636**A, and **650**A, respectively.

In some embodiments, a data table may be used to transmit advertising packets. For example, data table **660** may be used to transmit advertising packets **642**, **646**, and **650**. For example, data entries **672**, **674**, and **676** may be used to transmit advertising packets **642**, **646**, and **650**, respectively. Advertising parameter data **684**, **686**, and **688** may each include data indicating an advertising interval, possibly determined by applications **622**, **624**, and **626**, respectively. In particular, applications **622**, **624**, and **626** may set advertising

time intervals for transmitting advertising data **678**, **680**, and **682**, respectively. As such, each of the advertising packets **642**, **646**, and **650** may be transmitted during advertising time intervals, where each advertising time interval may vary from 100 milliseconds to 10.24 seconds, among other possible time intervals.

Further, advertising parameters **684**, **686**, and **688** may also each include data indicating an advertising time delay, possibly determined by applications **622**, **624**, and **626**, respectively. In particular, applications **622**, **624**, and **626** may set advertising time delays before or after transmitting advertising time intervals for transmitting advertising data **678**, **680**, and **682**, respectively. As such, each of the advertising packets **642**, **646**, and **650** may be transmitted before or after advertising time delays, where each advertising time delay may vary from 0 milliseconds to 10 milliseconds, among other possible advertising time delays. As such, advertising packets **642**, **646**, and **650** may be sent and received seamlessly by individual computing devices.

Further, controller **610** may use data table **660** to transmit advertising packets **642**, **646**, and **650** over the air using BSR addresses **634**A, **636**A, and **638**A, respectively. In particular, controller **610** may use advertising data **678**, **680**, and **682** to transmit advertising packets **642**, **646**, and **650**, respectively. Yet further, controller **610** may use parameter data **684**, **686**, and **688** to transmit advertising packets **642**, **646**, and **650**, respectively. In addition, controller **610** may use transmission power data **690**, **692**, and **694** to transmit advertising packets **642**, **646**, and **650**, respectively.

In some instances, a first advertising packet may be transmitted over a greater distance than a second advertising packet. For example, advertising packet **642** corresponding to VBC interface **634** may be transmitted over a first distance of 10 feet. Yet further, advertising packet **644** corresponding to VBC interface **636** may be transmitted over a second distance of 5 feet. In addition, for illustrative purposes, advertising packet **650** corresponding to VBC interface **638** may be transmitted over a third distance of 15 feet.

In some instances, a first advertising packet may be transmitted with a first duty cycle and a first transmitting power, where a second advertising packet may be transmitted with a second duty cycle and a second transmitting power. For example, advertising packet **642** corresponding to VBC interface **634** may be transmitted with a first duty cycle and a first transmitting power. Yet further, advertising packet **644** corresponding to VBC interface **636** may be transmitted with a second duty cycle and a second transmitting power, where the first power is greater than the second power.

It should be noted that data table **660** may include additional entries in addition to entries **672**, **674**, and **676**. In some instances, data table **660** may have a maximum size, possibly limited by controller **610** and/or a memory size of controller **610**. In some instances, data table **660** may be limited to nine entries or more.

FIG. **6**C illustrates example advertising packets. In particular, advertising packets **642**, **646**, and **650** may, for example, be transmitted in any manner as described above in relation to FIGS. **1** through **6**B. Further, packets **642**, **646**, and **650** of FIG. **6**C may be similar, substantially, and/or the same a packets **642**, **646**, and **650** of FIG. **6**A.

In some embodiments, applications may initiate the transfer of advertising packets. For example, applications **622**, **624**, and **626** may initiate the transmittal of advertising packets **642**, **646**, and **650**, respectively. Further, advertising packets **642**, **646**, and **650** may be transmitted with addresses **634**A, **636**A, and **638**A, respectively. Further, controller **610** may time-share radio **614** for transmitting advertising packets **642**, **646**, and **650** for applications **622**, **624**, and **626**, respectively.

In some embodiments, parameters may be determined for transmitting advertising packets. As noted, parameters **684**, **686**, and **688** may be determined for transmitting advertising packets **642**, **646**, and **650**, respectively. In some instances, parameters **684**, **686**, and **688** may be determined by applications **622**, **624**, and **626**. In particular, applications **622**, **624**, and **626** may provide duty cycle and frequency for transmitting each of advertising packets **642**, **646**, and **650**, respectively. Further, as noted, applications **622**, **624**, and **626** may provide transmitting power **690**, **692**, and **694**, for transmitting advertising packets **642**, **646**, and **650**, respectively.

As noted, Bluetooth device **600** may time-share radio **614** for transmitting advertising packets **642**, **646**, and **650** for applications **622**, **624**, and **626**, respectively. As shown in FIG. **6**C, advertising packet **642** may be transmitted by radio **614** during advertising time interval **6421**. Further, after advertising time delay **642**D, advertising packet **646** may be transmitted by radio **614** during advertising time interval **6461**. Yet further, after advertising time delay **646**D, advertising packet **650** may be transmitted by radio **614** during advertising time interval **650**I.

In some embodiments, a listening device may receive one or more of advertising packets. For example, a listening device may receive one or more of advertising packets **642**, **646**, and **650** of FIG. **6**A. In some instances, a listening device may send a request for more information or packets to radio **614**. Thus, controller **610** may initiate a response to serve this request. Further, in some instances, the listening device may send a request to pair with Bluetooth device **600** using a number of VBC interfaces **634**, **636**, and **638**. As such, controller **610** may transmit BSR address **610**A assigned to controller **610** for pairing with the listening device.

In some embodiments, controller **610** may include an advertising queue for transmitting advertisement packets. In some instances, each of the entries **672**, **674**, and **676** of FIG. **6**B may be sequentially and separately queued to the advertisement queue, possibly in the order shown in FIG. **6**B (from top to bottom). For example, data entry **672** may be placed in the advertisement queue for the advertising time interval **6421** indicated in advertising parameter data **684**. Further, possibly after advertising time delay **642**D, entry **674** may be placed in the advertisement queue for advertising time interval **6461**. Yet further, possibly after advertising time delay **646**D, entry **676** may be placed in the advertisement queue for advertising time interval **650**I.

In some embodiments, controller **610** may include a transmitting queue for transmitting advertisement packets. As such, when data entry **672** is placed in advertisement queue, the transmitting queue may create and/or transmit advertising packet **642** during an advertising time interval **6421**. Further, after advertising time delay **642**D when data entry **674** is placed in the advertisement queue, the transmitting queue may create and/or transmit advertising packet **646** during advertising time interval **6461**. Yet further, after advertising time delay **646**D when data entry **676** is placed in the advertisement queue, the transmitting queue may create and/or transmit advertising packet **650** during advertising time interval **650**I.

It should be understood that arrangements described herein are for purposes of example only. As such, those skilled in the art will appreciate that other arrangements and other elements (e.g. machines, interfaces, functions, orders, and groupings of functions, etc.) can be used instead, and some elements may be omitted altogether according to the desired results. Fur-

ther, many of the elements that are described are functional entities that may be implemented as discrete or distributed components or in conjunction with other components, in any suitable combination and location, or other structural elements described as independent structures may be combined.

While various aspects and embodiments have been disclosed herein, other aspects and embodiments will be apparent to those skilled in the art. The various aspects and embodiments disclosed herein are for purposes of illustration and are not intended to be limiting, with the true scope being indicated by the following claims, along with the full scope of equivalents to which such claims are entitled. It is also to be understood that the terminology used herein is for the purpose of describing particular embodiments only, and is not intended to be limiting.

What is claimed is:

1. A method comprising:

determining a plurality of applications configured to communicate with a Bluetooth device;

determining a plurality of virtual Bluetooth controller (VBC) interfaces for the plurality of applications, wherein the plurality of VBC interfaces correspond to respective Bluetooth static random (BSR) addresses of a plurality of BSR addresses, and wherein the plurality of VBC interfaces includes a first VBC interface corresponding to a first application and a second VBC interface corresponding to a second application of the plurality of applications;

determining one or more advertising packets for the plurality of VBC interfaces, wherein the one or more advertising packets include the respective BSR addresses of the plurality of BSR addresses; and

transmitting, via a radio associated with the Bluetooth device, the one or more advertising packets for the plurality of VBC interfaces, wherein transmitting the one or more advertising packets includes transmitting a first advertising packet corresponding to the first VBC interface at a first transmission power and transmitting a second advertising packet corresponding to the second VBC interface at a second transmission power.

2. The method of claim **1**, wherein the Bluetooth device includes a physical Bluetooth controller (PBC) interface, wherein the PBC interface corresponds to a physical BSR address different from the respective BSR addresses for the plurality of VBC interfaces, and wherein the method further comprises associating the PBC interface for a particular one of the plurality of applications.

3. The method of claim **1**, wherein the plurality of applications comprises a first application and a second application, and wherein determining the plurality of VBC interfaces for the plurality of applications comprises:

determining a first VBC interface for the first application, wherein the first VBC interface corresponds to a first BSR address, and

determining a second VBC interface for the second application, wherein the second VBC interface corresponds to a second BSR address, wherein the first BSR address differs from the second BSR address.

4. The method of claim **1**, wherein the plurality of applications comprises: (i) a first application corresponding to a first VBC interface and (ii) a second application corresponding to a second VBC interface, wherein determining the one or more advertising packets for the plurality of applications comprises:

determining a first advertising packet corresponding to the first VBC interface, wherein the first advertising packet comprises a first BSR address, and

determining a second advertising packet corresponding to the second VBC interface, wherein the second advertising packet comprises a second BSR address.

5. The method of claim **4**, wherein the method further comprises maintaining a data table comprising a first data entry indicative of the first VBC interface, the first advertising packet, and the first BSR address, and wherein the data table further comprises a second data entry indicative of the second VBC interface, the second advertising packet, and the second BSR address.

6. The method of claim **1**, wherein the first advertising packet corresponding to the first VBC interface is transmitted with a first duty cycle and a first transmitting power, wherein the second advertising packet corresponding to the second VBC interface is transmitted with a second duty cycle and a second transmitting power, and wherein the first power is greater than the second transmitting power.

7. A Bluetooth device comprising;

a processor; and

a computer readable medium having stored thereon program instructions that when executed by the processor cause the Bluetooth device to perform functions, the functions comprising:

determining a plurality of applications configured to communicate with the Bluetooth device;

determining a plurality of virtual Bluetooth controller (VBC) interfaces for the plurality of applications, wherein the plurality of VBC interfaces correspond to respective Bluetooth static random (BSR) addresses of a plurality of BSR addresses, and wherein the plurality of VBC interfaces includes a first VBC interface corresponding to a first application and a second VBC interface corresponding to a second application of the plurality of applications;

determining one or more advertising packets for the plurality of VBC interfaces, wherein the one or more advertising packets include the respective BSR addresses of the plurality of BSR addresses; and

transmitting, via a radio associated with the Bluetooth device, the one or more advertising packets for the plurality of VBC interfaces, wherein transmitting the one or more advertising packets includes transmitting a first advertising packet corresponding to the first VBC interface at a first transmission power and transmitting a second advertising packet corresponding to the second VBC interface at a second transmission power.

8. The Bluetooth device of claim **7**, wherein the Bluetooth device includes a physical Bluetooth controller (PBC) interface, wherein the PBC interface corresponds to a physical BSR address different from the respective BSR addresses for the plurality of VBC interfaces, and wherein the functions further comprise associating the PBC interface for a particular one of the plurality of applications.

9. The Bluetooth device of claim **7**, wherein the plurality of applications comprises a first application and a second application, and wherein determining the plurality of VBC interfaces for the plurality of applications comprises:

determining a first VBC interface for the first application, wherein the first VBC interface corresponds to a first BSR address, and

determining a second VBC interface for the second application, wherein the second VBC interface corresponds to a second BSR address, wherein the first BSR address differs from the second BSR address.

10. The Bluetooth device of claim **7**, wherein the plurality of applications comprises: (i) a first application correspond-

ing to a first VBC interface and (ii) a second application corresponding to a second VBC interface, wherein determining the one or more advertising packets for the plurality of applications comprises:

determining a first advertising packet corresponding to the first VBC interface, wherein the first advertising packet comprises a first BSR address, and

determining a second advertising packet corresponding to the second VBC interface, wherein the second advertising packet comprises a second BSR address.

11. The Bluetooth device of claim **10**, wherein the functions further comprise maintaining a data table comprising a first data entry indicative of the first VBC interface, the first advertising packet, and the first BSR address, and wherein the data table further comprises a second data entry indicative of the second VBC interface, the second advertising packet, and the second BSR address.

12. The Bluetooth device of claim **7**, wherein the first advertising packet corresponding to the first VBC interface is transmitted with a first duty cycle and a first transmitting power, wherein the second advertising packet corresponding to the second VBC interface is transmitted with a second duty cycle and a second transmitting power, and wherein the first power is greater than the second transmitting power.

13. A non-transitory computer-readable medium having stored thereon program instructions that, when executed by a processor of a Bluetooth device, cause the Bluetooth device to perform functions comprising:

determining a plurality of applications configured to communicate with the Bluetooth device;

determining a plurality of virtual Bluetooth controller (VBC) interfaces for the plurality of applications, wherein the plurality of VBC interfaces correspond to respective Bluetooth static random (BSR) addresses of a plurality of BSR addresses, and wherein the plurality of VBC interfaces includes a first VBC interface corresponding to a first application and a second VBC interface corresponding to a second application of the plurality of applications;

determining one or more advertising packets for the plurality of VBC interfaces, wherein the one or more advertising packets include the respective BSR addresses of the plurality of BSR addresses; and

transmitting, via a radio associated with the Bluetooth device, the one or more advertising packets for the plurality of VBC interfaces, wherein transmitting the one or more advertising packets includes transmitting a first advertising packet corresponding to the first VBC interface at a first transmission power and transmitting a second advertising packet corresponding to the second VBC interface at a second transmission power.

14. The non-transitory computer-readable medium of claim **13**, wherein the Bluetooth device includes a physical Bluetooth controller (PBC) interface, wherein the PBC interface corresponds to a physical BSR address different from the respective BSR addresses for plurality of VBC interfaces, and wherein the functions further comprise associating the PBC interface for a particular one of the plurality of applications.

15. The non-transitory computer-readable medium of claim **13**, wherein the plurality of applications comprises a first application and a second application, and wherein determining the plurality of VBC interfaces for the plurality of applications comprises:

determining a first VBC interface for the first application, wherein the first VBC interface corresponds to a first BSR address, and

determining a second VBC interface for the second application, wherein the second VBC interface corresponds to a second BSR address, wherein the first BSR address differs from the second BSR address.

16. The non-transitory computer-readable medium of claim **13**, wherein the plurality of applications comprises: (i) a first application corresponding to a first VBC interface and (ii) a second application corresponding to a second VBC interface, wherein determining the one or more advertising packets for the plurality of applications comprises:

determining a first advertising packet corresponding to the first VBC interface, wherein the first advertising packet comprises a first BSR address, and

determining a second advertising packet corresponding to the second VBC interface, wherein the second advertising packet comprises a second BSR address.

17. The non-transitory computer-readable medium of claim **16**, wherein the functions further comprises maintaining a data table comprising a first data entry indicative of the first VBC interface, the first advertising packet, and the first BSR address, and wherein the data table further comprises a second data entry indicative of the second VBC interface, the second advertising packet, and the second BSR address.

* * * * *