US009170392B2

(12) **United States Patent**
Krampotich et al.

(10) **Patent No.: US 9,170,392 B2**
(45) **Date of Patent: Oct. 27, 2015**

(54) **TELECOMMUNICATIONS ASSEMBLY**

(71) Applicant: **ADC Telecommunications, Inc.**, Berwyn, PA (US)

(72) Inventors: **Dennis Krampotich**, Shakopee, MN (US); **Jonathan Walter Coan**, Savage, MN (US)

(73) Assignee: **Tyco Electronics Services GmbH**, Schaffhausen (CH)

(*) Notice: Subject to any disclaimer, the term of this patent is extended or adjusted under 35 U.S.C. 154(b) by 0 days.

(21) Appl. No.: **14/597,936**

(22) Filed: **Jan. 15, 2015**

(65) **Prior Publication Data**

US 2015/0241653 A1 Aug. 27, 2015

Related U.S. Application Data

(63) Continuation of application No. 14/060,223, filed on Oct. 22, 2013, now Pat. No. 8,938,147, which is a continuation of application No. 13/167,550, filed on Jun. 23, 2011, now Pat. No. 8,565,572.

(Continued)

(51) **Int. Cl.**
G02B 6/44 (2006.01)
G02B 6/46 (2006.01)

(52) **U.S. Cl.**
CPC ***G02B 6/4457*** (2013.01); ***G02B 6/4448*** (2013.01); ***G02B 6/4452*** (2013.01); ***G02B 6/4455*** (2013.01); *G02B 6/46* (2013.01)

(58) **Field of Classification Search**
CPC G02B 6/4457–6/4458
See application file for complete search history.

(56) **References Cited**

U.S. PATENT DOCUMENTS

4,953,194 A 8/1990 Hansen et al.
4,968,929 A 11/1990 Hauck et al.
4,978,310 A 12/1990 Shichida
5,052,940 A 10/1991 Bengal
5,107,532 A 4/1992 Hansen et al.

(Continued)

FOREIGN PATENT DOCUMENTS

DE 102 44 304 B3 3/2004
GB 2 236 398 A 4/1991

(Continued)

OTHER PUBLICATIONS

Avaya's Enhanced SYSTIMAX® iPatch System Enables IT Managers to Optimise Network Efficiency and Cut Downtime, Press Release, May 9, 2003, obtained from http://www.avaya.com/usa/about-avaya/newsroom/news-releases/2003/pr-030509 on Jan. 7, 2009.

(Continued)

Primary Examiner — Jerry Rahll
(74) *Attorney, Agent, or Firm* — Merchant & Gould P.C.

(57) **ABSTRACT**

A telecommunications assembly includes a chassis defining an interior region and a tray assembly disposed in the interior region. The tray assembly includes a tray and a cable spool assembly. The cable spool assembly is engaged to a base panel of the tray. The cable spool assembly is adapted to rotate relative to the tray. The cable spool assembly includes a hub, a flange engaged to the hub and an adapter module. The flange defines a termination area. The adapter module is engaged to the termination module of the flange. The adapter module is adapted to slide relative to the flange in a direction that is generally parallel to the flange between an extended position and a retracted position.

20 Claims, 33 Drawing Sheets

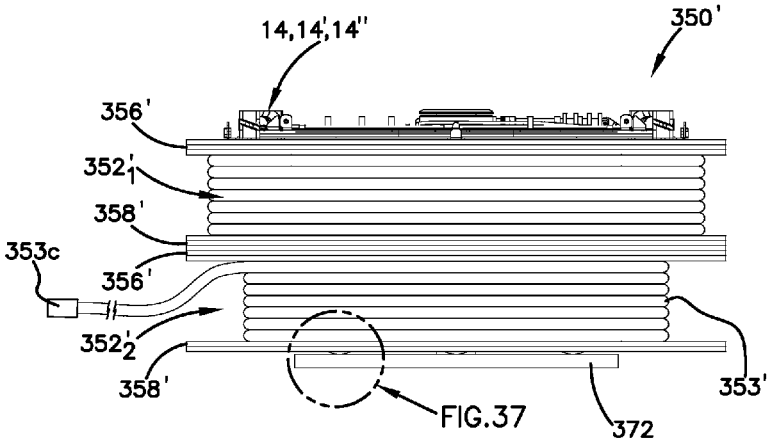

FIG.37

Related U.S. Application Data

(60) Provisional application No. 61/487,542, filed on May 18, 2011, provisional application No. 61/378,710, filed on Aug. 31, 2010, provisional application No. 61/357,898, filed on Jun. 23, 2010.

(56) **References Cited**

U.S. PATENT DOCUMENTS

5,161,988	A	11/1992	Krupka	
5,166,970	A	11/1992	Ward	
5,222,164	A	6/1993	Bass, Sr. et al.	
5,265,187	A	11/1993	Morin et al.	
5,305,405	A	4/1994	Emmons et al.	
5,353,367	A	10/1994	Czosnowski et al.	
5,393,249	A	2/1995	Morgenstern et al.	
5,394,503	A	2/1995	Dietz, Jr. et al.	
5,413,494	A	5/1995	Dewey et al.	
5,418,334	A	5/1995	Williams	
5,419,717	A	5/1995	Abendschein et al.	
5,448,675	A	9/1995	Leone et al.	
5,467,062	A	11/1995	Burroughs et al.	
5,473,715	A	12/1995	Schofield et al.	
5,483,467	A	1/1996	Krupka et al.	
5,613,030	A	3/1997	Hoffer et al.	
5,685,741	A	11/1997	Dewey et al.	
5,712,942	A	1/1998	Jennings et al.	
5,821,510	A	10/1998	Cohen et al.	
5,854,824	A	12/1998	Bengal et al.	
6,002,331	A	12/1999	Laor	
6,077,108	A	6/2000	Lorscheider et al.	
6,095,837	A	8/2000	David et al.	
6,116,961	A	9/2000	Henneberger et al.	
6,215,938	B1	4/2001	Reitmeier et al.	
6,220,413	B1	4/2001	Walters et al.	
6,222,908	B1	4/2001	Bartolutti et al.	
6,222,975	B1	4/2001	Gilbert et al.	
6,234,830	B1	5/2001	Ensz et al.	
6,238,235	B1	5/2001	Shavit et al.	
6,285,293	B1	9/2001	German et al.	
6,300,877	B1	10/2001	Schannach et al.	
6,330,148	B1	12/2001	Won et al.	
6,330,307	B1	12/2001	Bloch et al.	
6,350,148	B1	2/2002	Bartolutti et al.	
6,421,322	B1	7/2002	Koziy et al.	
6,424,710	B1	7/2002	Bartolutti et al.	
6,456,768	B1	9/2002	Boncek et al.	
D466,479	S	12/2002	Pein et al.	
6,499,861	B1	12/2002	German et al.	
6,511,231	B2	1/2003	Lampert et al.	
6,522,737	B1	2/2003	Bartolutti et al.	
6,554,484	B2	4/2003	Lampert	
6,574,586	B1	6/2003	David et al.	
6,626,697	B1	9/2003	Martin et al.	
6,636,152	B2	10/2003	Schannach et al.	
6,684,179	B1	1/2004	David	
6,715,619	B2	4/2004	Kim et al.	
6,725,177	B2	4/2004	David et al.	
6,743,044	B2	6/2004	Musolf et al.	
6,793,408	B2	9/2004	Levy et al.	
6,802,735	B2	10/2004	Pepe et al.	
6,808,116	B1	10/2004	Eslambolchi et al.	
6,814,624	B2	11/2004	Clark et al.	
6,850,685	B2	2/2005	Tinucci et al.	
6,898,368	B2	5/2005	Colombo et al.	
6,905,363	B2	6/2005	Musolf et al.	
6,932,517	B2	8/2005	Swayze et al.	
6,933,441	B2	8/2005	Fuller et al.	
D510,068	S	9/2005	Haggay et al.	
6,961,675	B2	11/2005	David	
6,971,895	B2	12/2005	Sago et al.	
6,976,867	B2	12/2005	Navarro et al.	
7,027,704	B2	4/2006	Frohlich et al.	
7,077,710	B2	7/2006	Haggay et al.	
7,081,808	B2	7/2006	Colombo et al.	
7,112,090	B2	9/2006	Caveney et al.	
7,123,810	B2	10/2006	Parrish	
7,153,142	B2	12/2006	Shifris et al.	
7,165,728	B2	1/2007	Durrant et al.	
7,193,422	B2	3/2007	Velleca et al.	
7,210,858	B2	5/2007	Sago et al	
7,226,217	B1	6/2007	Benton et al.	
7,234,944	B2	6/2007	Nordin et al.	
7,297,018	B2	11/2007	Caveney et al.	
7,312,715	B2	12/2007	Shalts et al.	
D559,186	S	1/2008	Kelmer	
7,315,224	B2	1/2008	Gurovich et al.	
7,352,289	B1	4/2008	Harris	
7,370,106	B2	5/2008	Caveney	
7,400,814	B1	7/2008	Hendrickson et al.	
7,479,032	B2	1/2009	Hoath et al.	
7,519,000	B2	4/2009	Caveney et al.	
7,522,806	B2	4/2009	Hendrickson et al.	
7,534,137	B2	5/2009	Caveney et al.	
7,546,018	B2	6/2009	Hendrickson et al.	
7,552,872	B2	6/2009	Tokita et al.	
7,570,861	B2	8/2009	Smrha et al.	
7,591,667	B2	9/2009	Gatnau Navarro et al.	
7,711,233	B2	5/2010	Mahoney	
7,715,679	B2	5/2010	Kowalczyk et al.	
7,756,379	B2	7/2010	Kowalczyk et al.	
7,811,119	B2	10/2010	Caveney et al.	
7,869,426	B2	1/2011	Hough et al.	
7,869,682	B2	1/2011	Kowalczyk et al.	
7,872,738	B2	1/2011	Abbott	
8,157,582	B2	4/2012	Frey et al.	
8,189,984	B2	5/2012	Kowalczyk et al.	
8,326,107	B2	12/2012	Cooke et al.	
8,422,847	B2	4/2013	Kowalczyk et al.	
8,565,572	B2	10/2013	Krampotich et al.	
8,938,497	B1	1/2015	Wang	
2004/0240807	A1	12/2004	Frohlich et al.	
2005/0103515	A1	5/2005	Fuller et al.	
2006/0148279	A1	7/2006	German et al.	
2006/0160395	A1	7/2006	Macauley et al.	
2006/0280418	A1	12/2006	Mahoney	
2007/0237470	A1	10/2007	Aronson et al.	
2008/0100467	A1	5/2008	Downie et al.	
2008/0315030	A1*	12/2008	Hendrickson et al.	242/565
2009/0097846	A1	4/2009	Kozischek et al.	
2009/0098763	A1	4/2009	Below et al.	
2009/0166404	A1	7/2009	German et al.	
2009/0215310	A1	8/2009	Hoath et al.	
2010/0054684	A1	3/2010	Cooke et al.	
2010/0211664	A1	8/2010	Raza et al.	
2010/0211665	A1	8/2010	Raza et al.	
2010/0211697	A1	8/2010	Raza et al.	
2010/0215049	A1	8/2010	Raza et al.	
2010/0322583	A1	12/2010	Cooke et al.	
2011/0092100	A1	4/2011	Coffey et al.	

FOREIGN PATENT DOCUMENTS

WO	WO 2010/001400	A1	1/2010
WO	WO 2010/081186	A1	7/2010
WO	WO 2010/121639	A1	10/2010

OTHER PUBLICATIONS

Avaya's Enhanced SYSTIMAX® iPatch System Enables IT Managers to Optimise Network Efficiency and Cut Downtime, Press Release, May 20, 2003, obtained from http://www.avaya.com/usa/about-avaya/newsroom/news-releases/2003/pr-030520 on Jan. 7, 2009.

Intelligent patching systems carving out a 'large' niche, Cabling Installation & Maintenance, vol. 12, Issue 7, Jul. 2004 (5 pages).

intelliMAC: The intelligent way to make Moves, Adds or Changes! NORDX/CDT © 2003 (6 pages).

International Search Report and Written Opinion for PCT/US2010/052872 mailed Jan. 12, 2011.

International Search Report and Written Opinion for PCT/US2011/041605 mailed Feb. 24, 2012.

Meredith, L., "Managers missing point of intelligent patching," *Daa Center News*, Jun. 21, 2005, obtained Dec. 2, 2008 from http://

(56) **References Cited**

OTHER PUBLICATIONS

searchdatacenter.techtarget.com/news/article/0,289142,sid80_gci1099991,00.html.

Ohtsuki, F. et al., "Design of Optical Connectors with ID Modules," *Electronics and Communications in Japan*, Part 1, vol. 77, No. 2, pp. 94-105 (Feb. 1994).

SYSTIMAX® iPatch System Wins Platinum Network of the Year Award, Press Release, Jan. 30, 2003, obtained from http://www.avaya.com/usa/about-avaya/newsroom/news-releases/2003/pr-030130a on Jan. 7, 2009.

TrueNet; TFP Series Rack Mount Fiber Panels, Spec Sheet; May 2008; 8 pages.

* cited by examiner

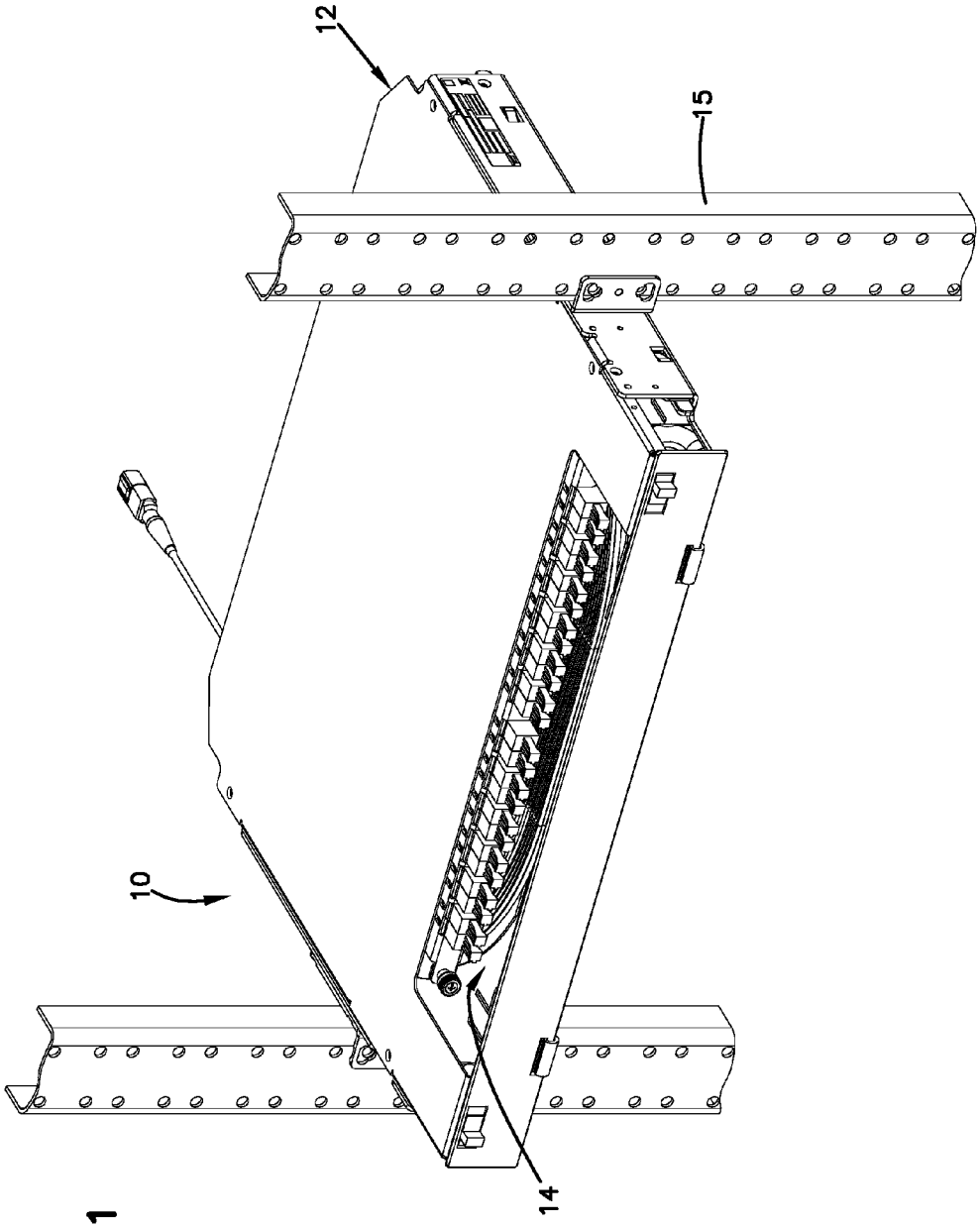

FIG. 1

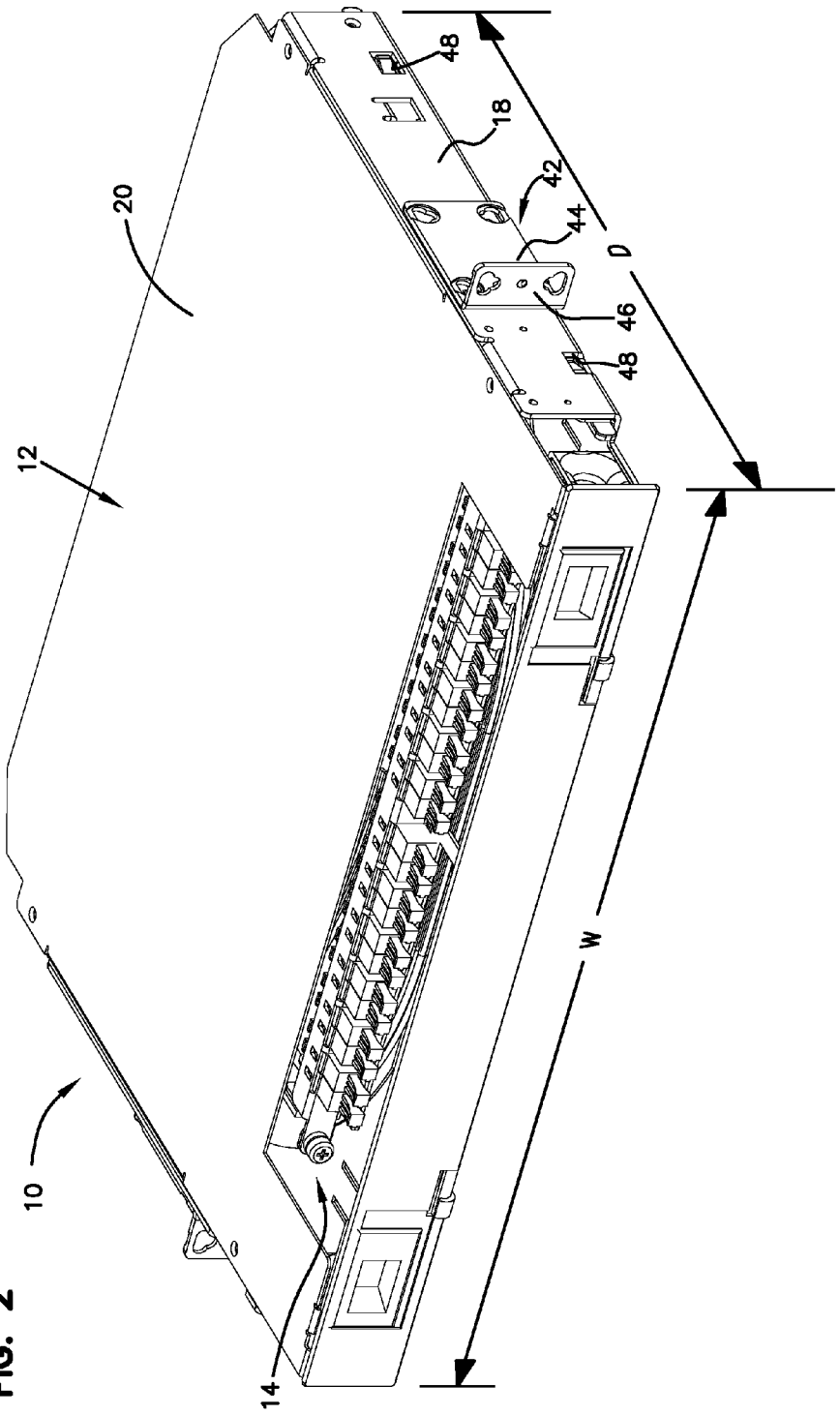

FIG. 2

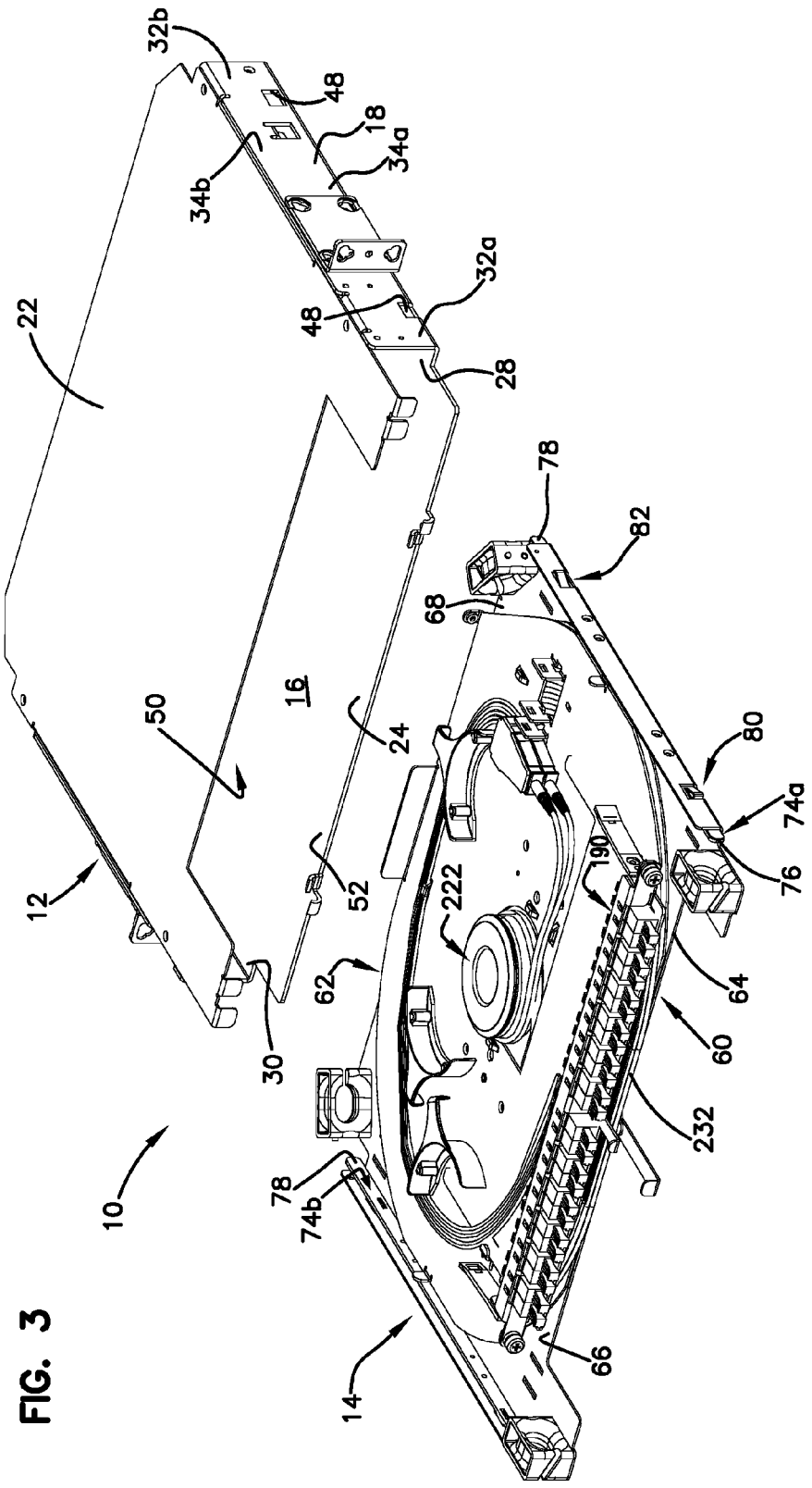
32b
48
18
34a
34b
32a
48
28
22
78
82
68
16
50
24
80
74a
76
12
52
222
190
62
64
60
30
232
78
74b
10
66
14

FIG. 3

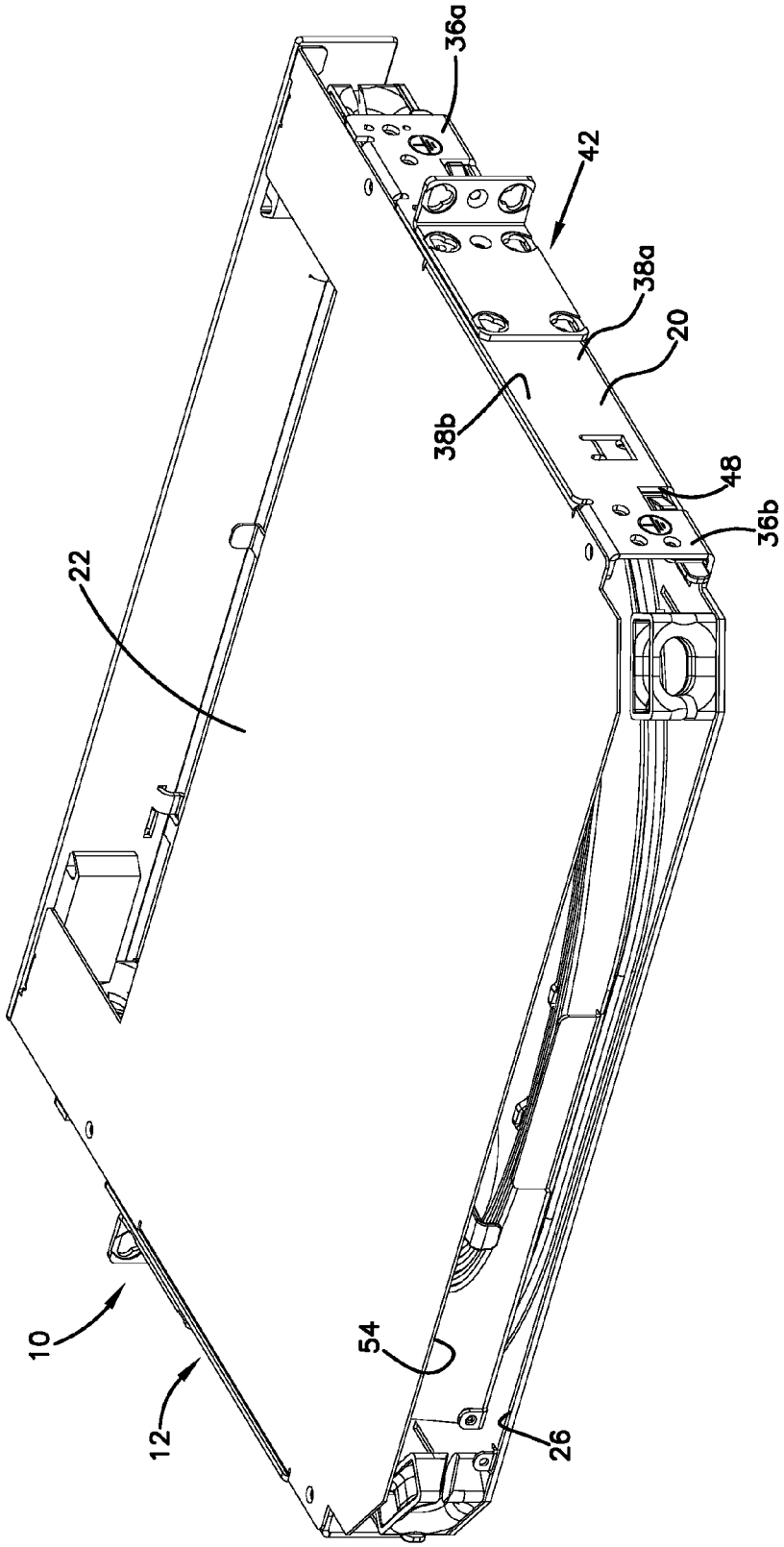

FIG. 4

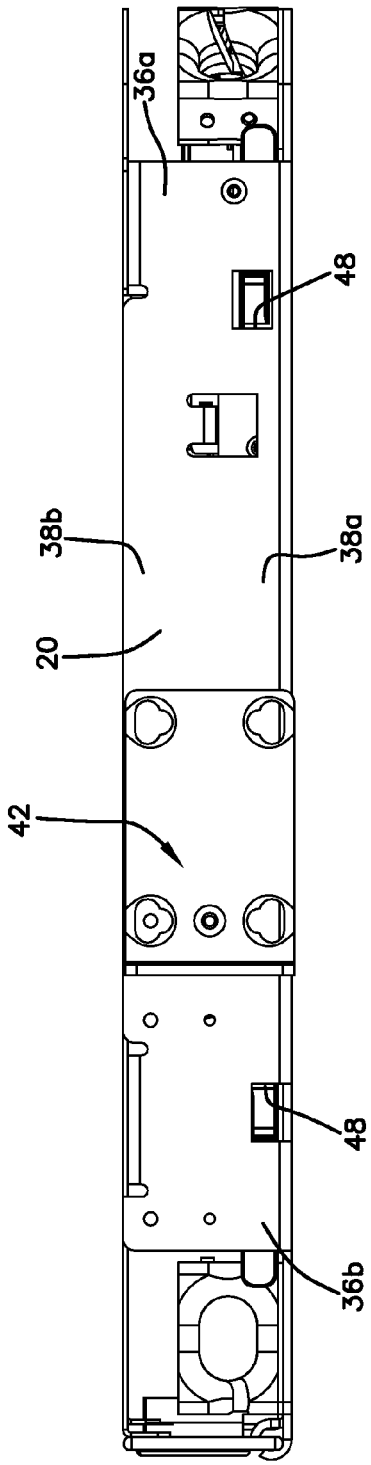

FIG. 5

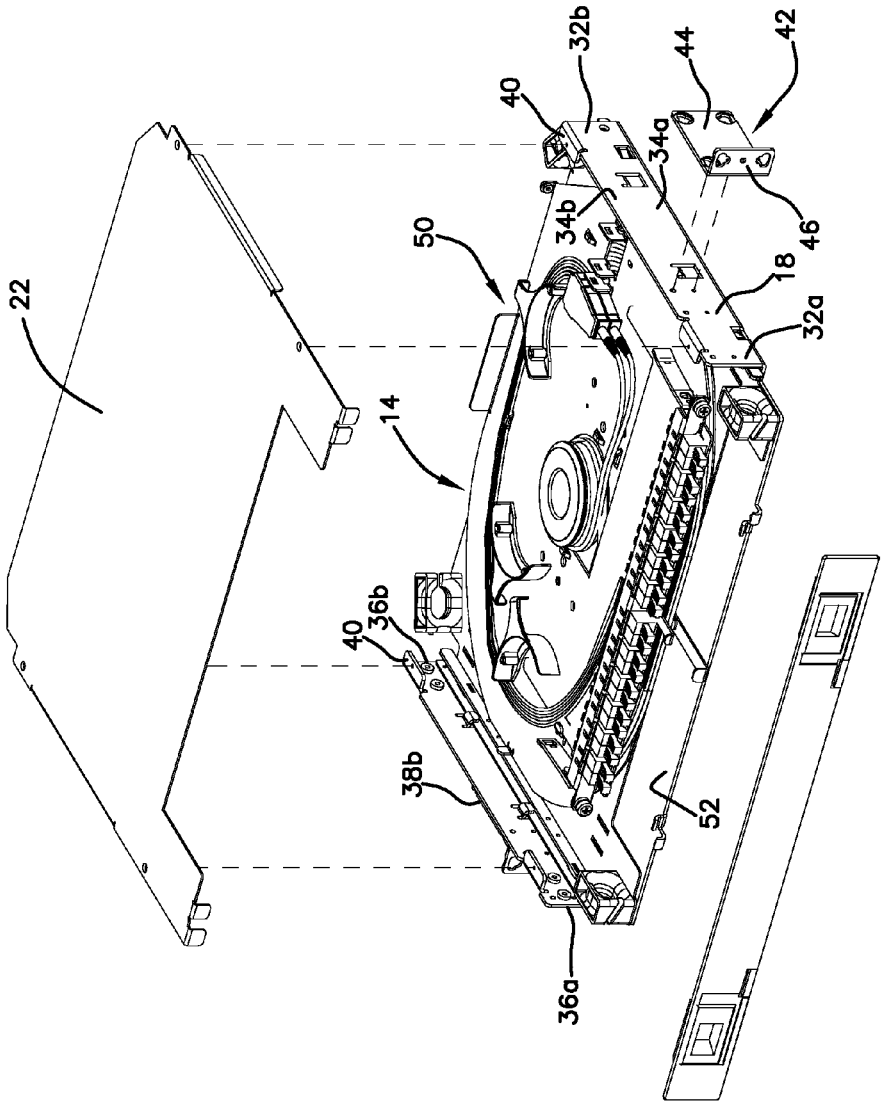

FIG. 6

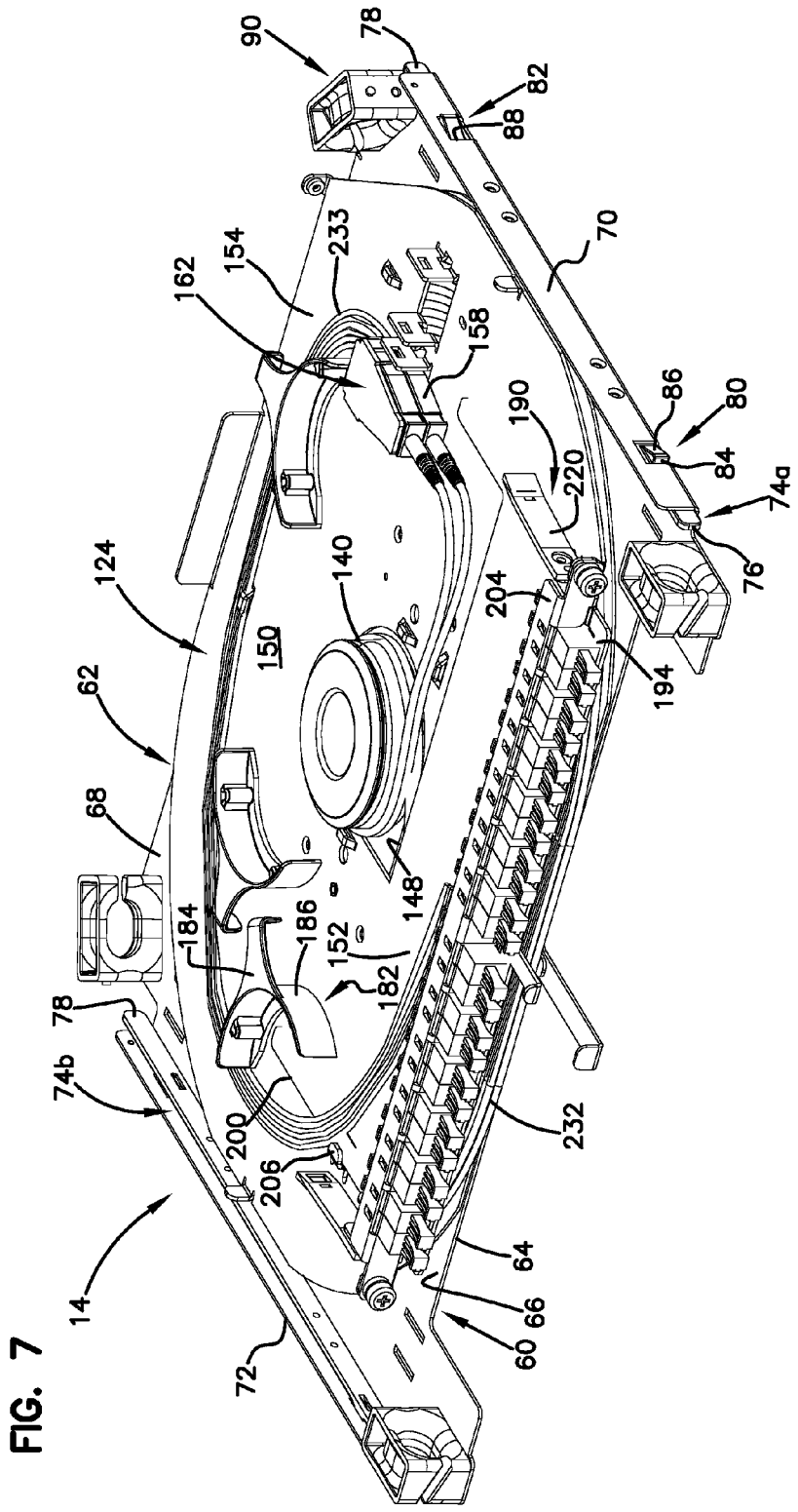
90
78
82
88
70
154
233
162
158
190
86
80
84
74a
220
76
124
140
204
150
194
62
68
148
184
186
152
182
78
74b
200
206
232
64
66
60
14
72

FIG. 7

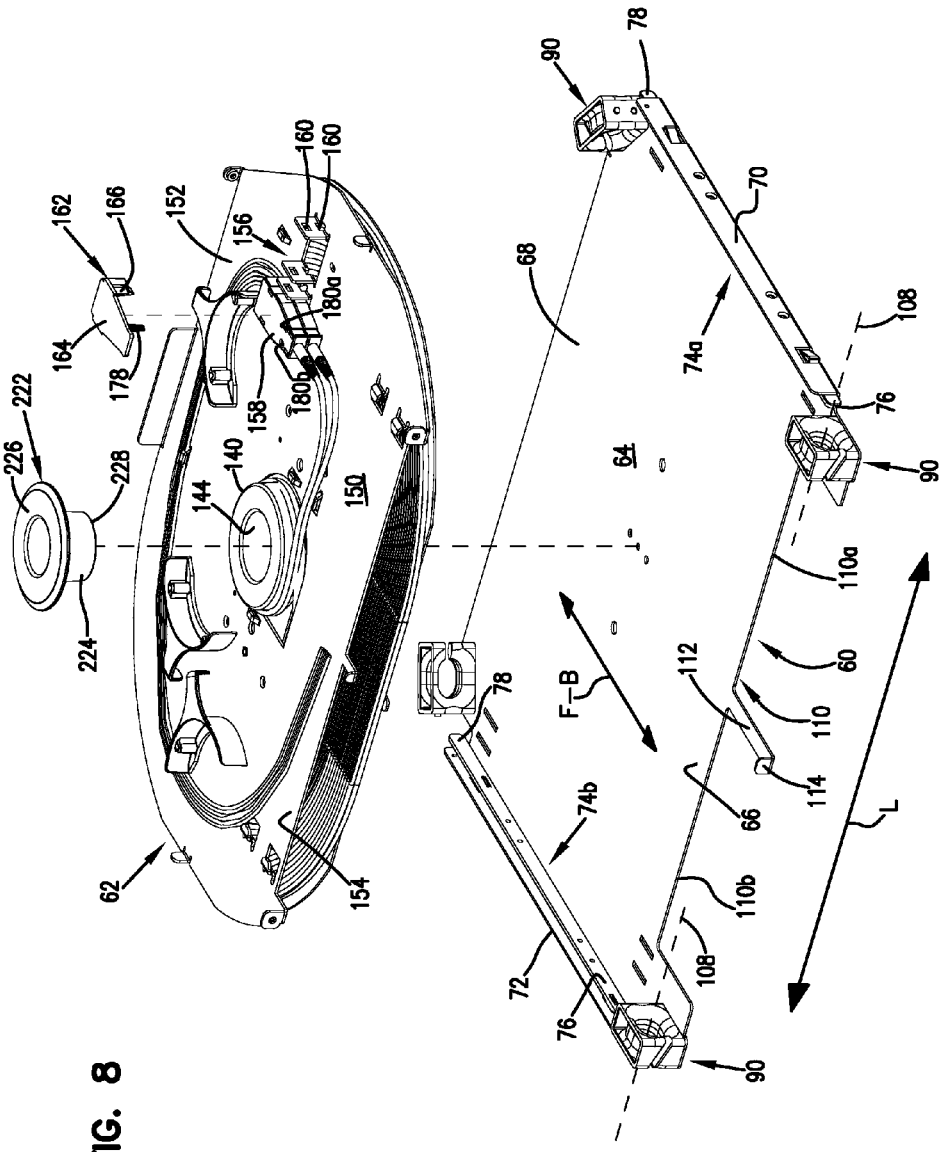
62
64
66
68
70
72
74a
74b
76
78
90
108
110
110a
110b
112
114
150
152
154
156
158
160
162
164
166
178
180a
180b
140
144
222
224
226
228
F–B
L

FIG. 8

FIG. 9

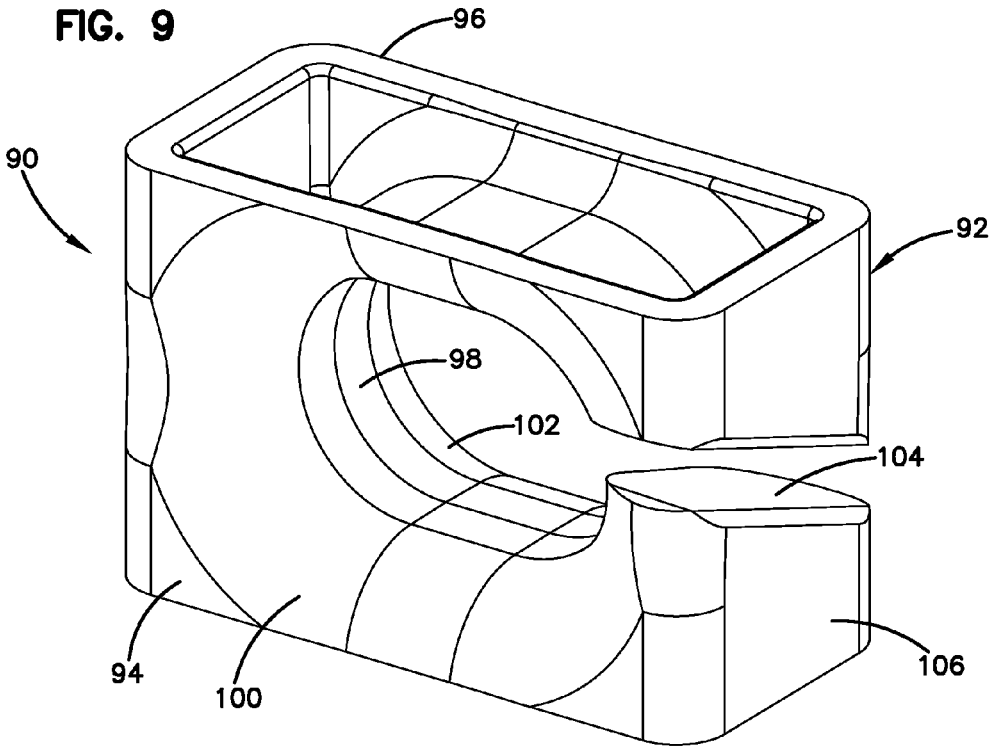

FIG. 10

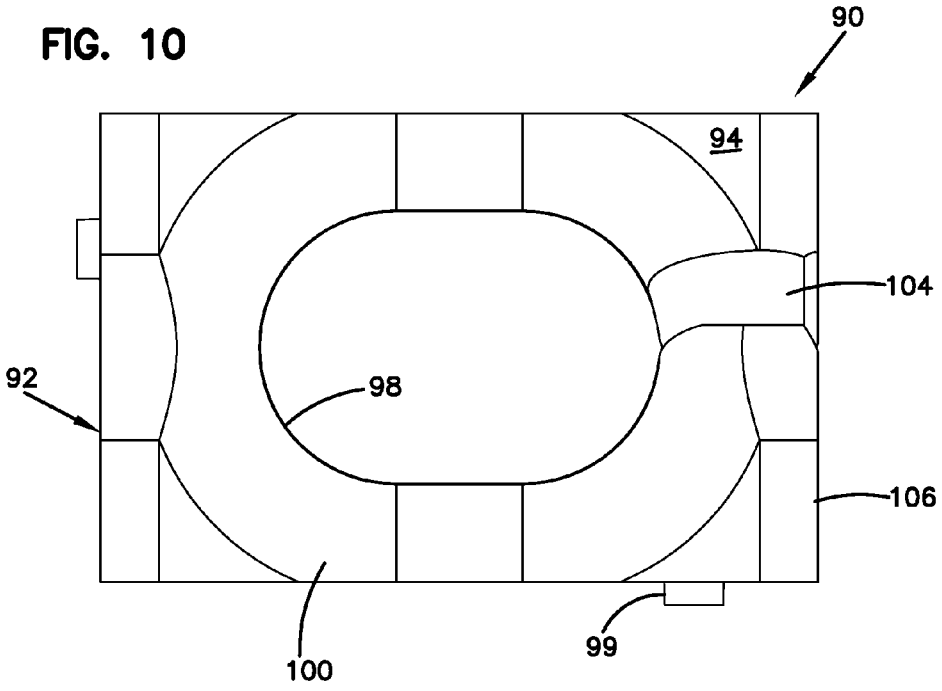

FIG. 11

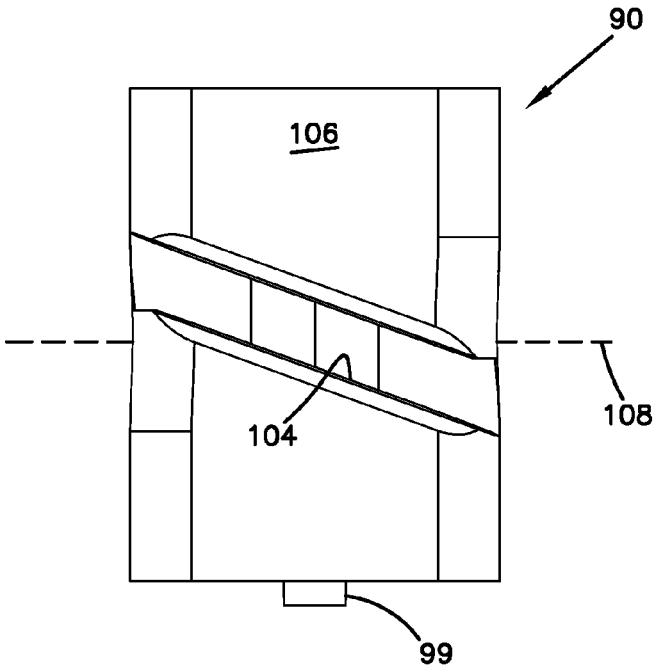

FIG. 12

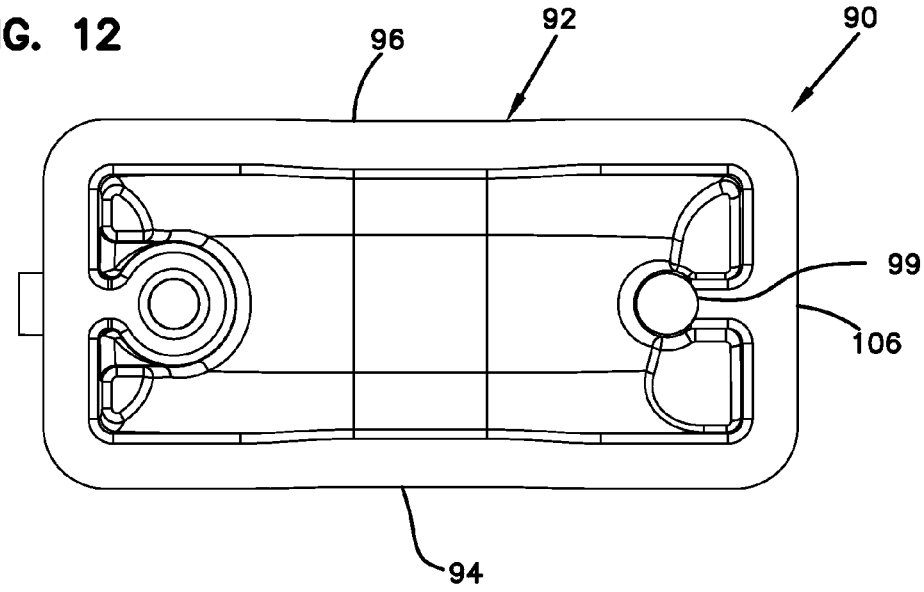

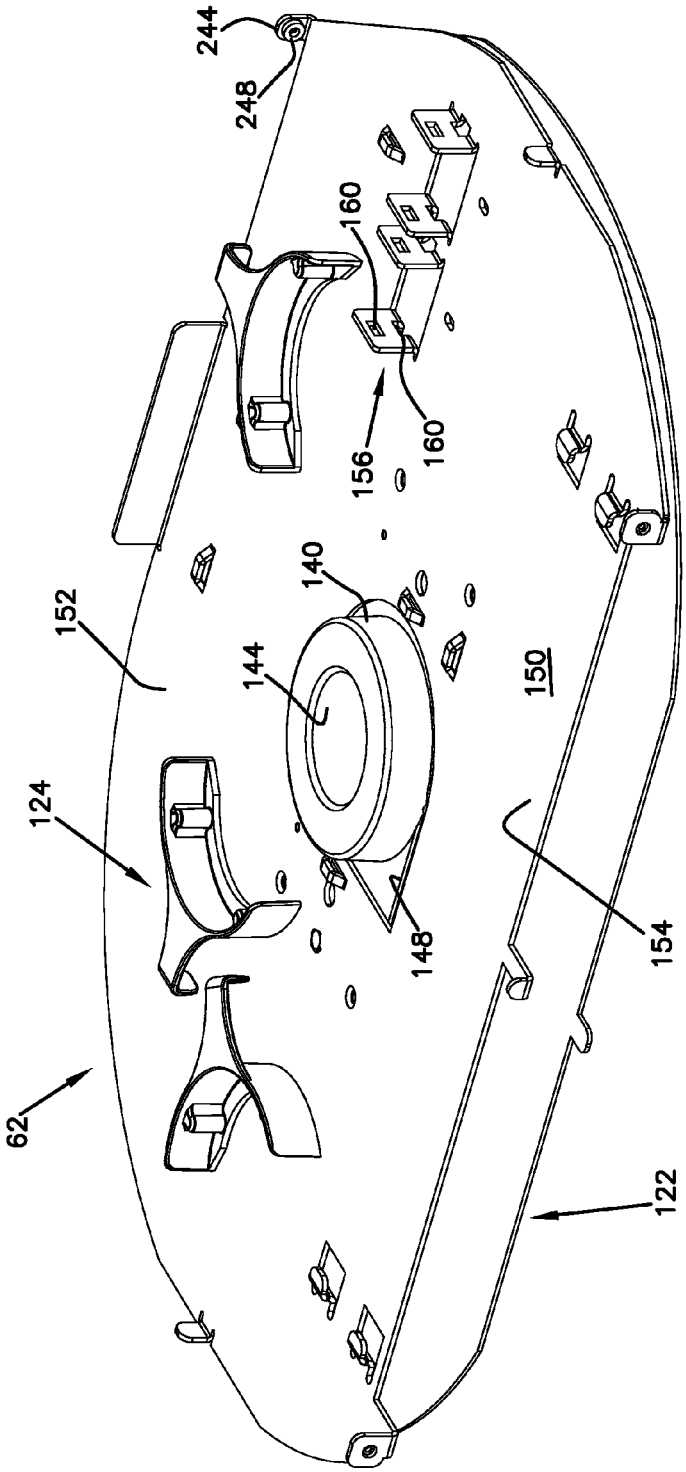

FIG. 13

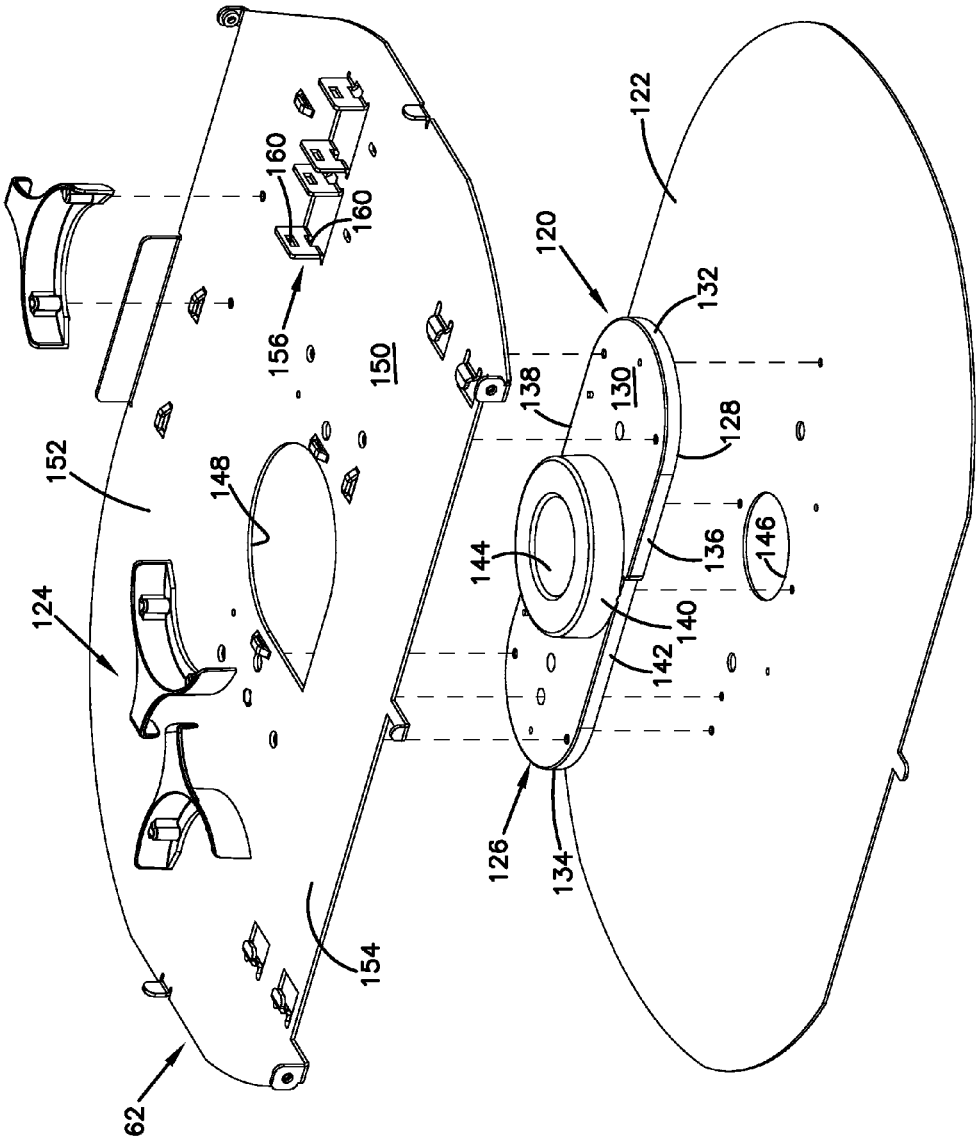
160
160
156
150
120
122
132
138
130
128
152
148
144
136
146
124
140
142
126
134
154
62

FIG. 14

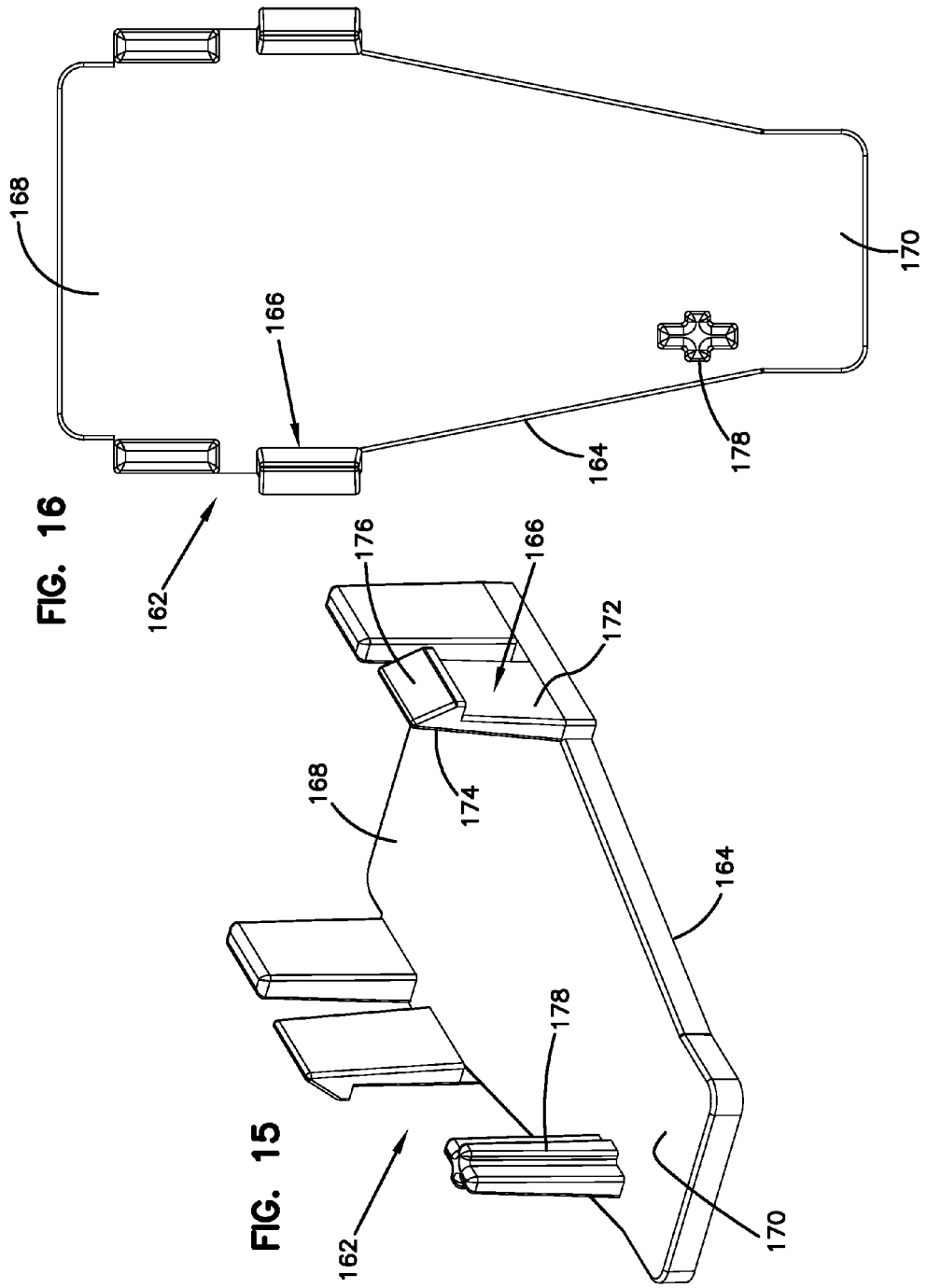

FIG. 16

FIG. 15

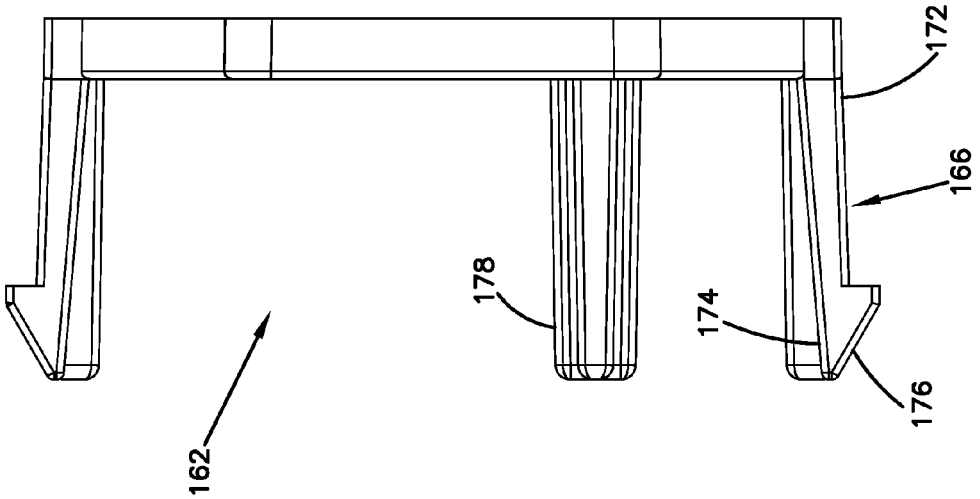

FIG. 18

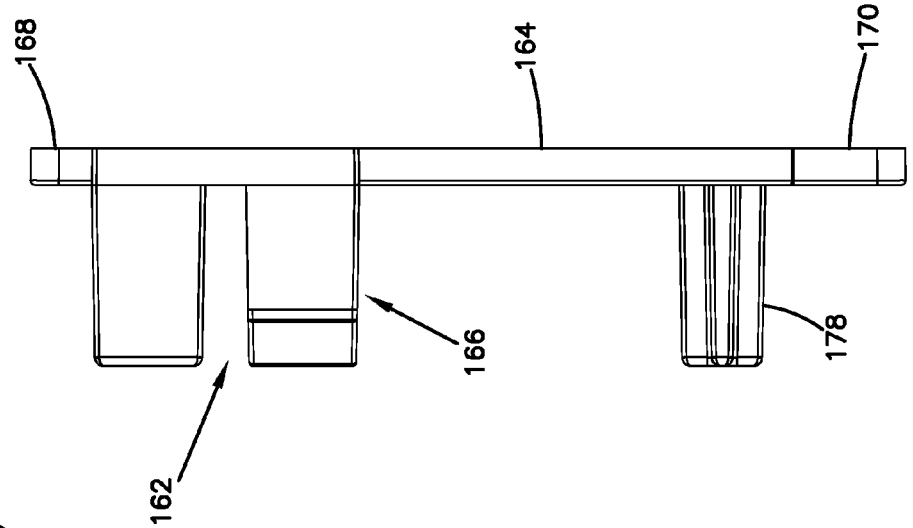

FIG. 17

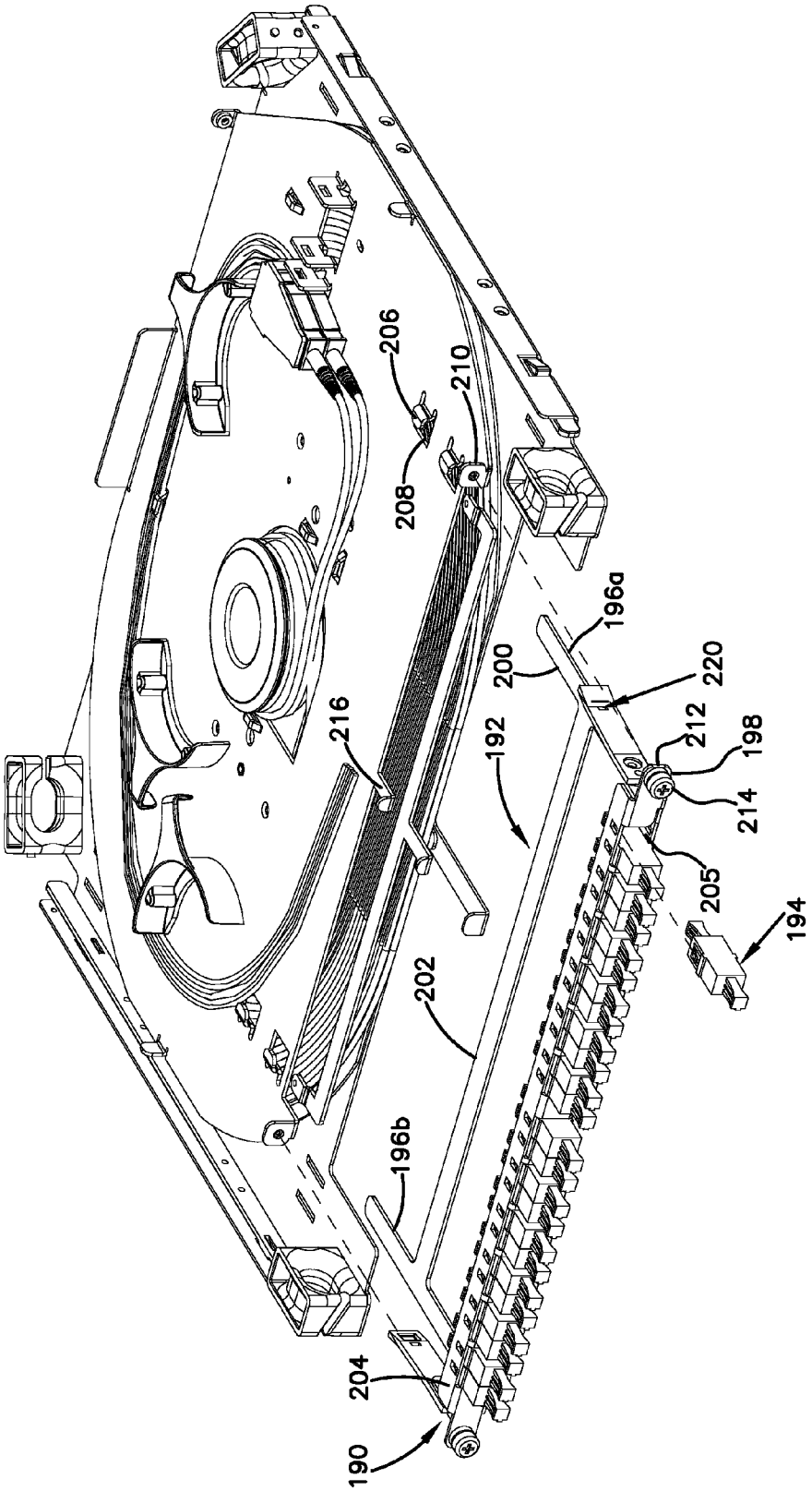
206
210
208
196a
200
220
212
198
216
192
214
205
194
202
196b
204
190

FIG. 19

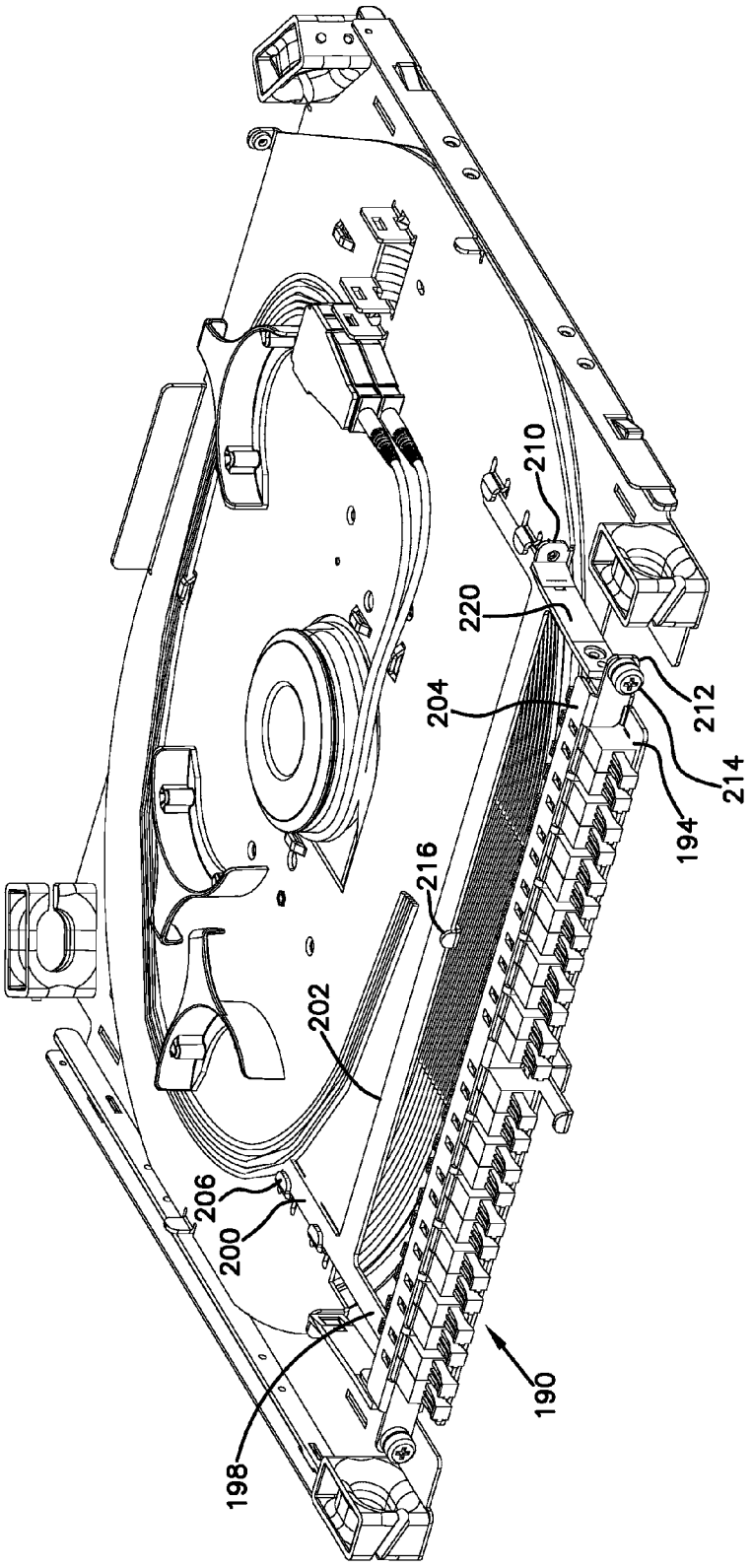

FIG. 20

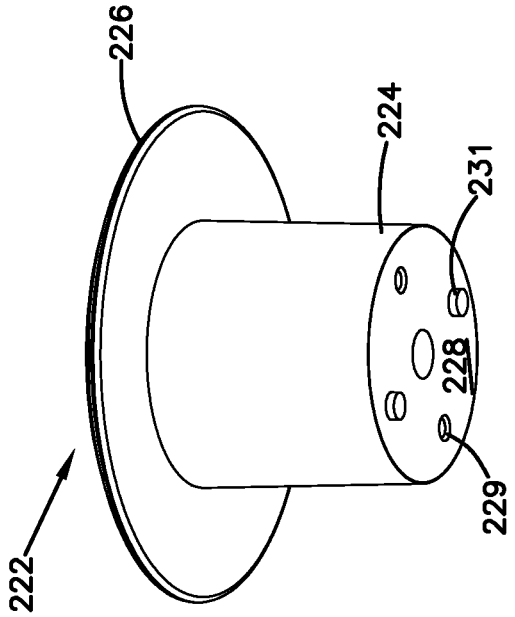

FIG. 21

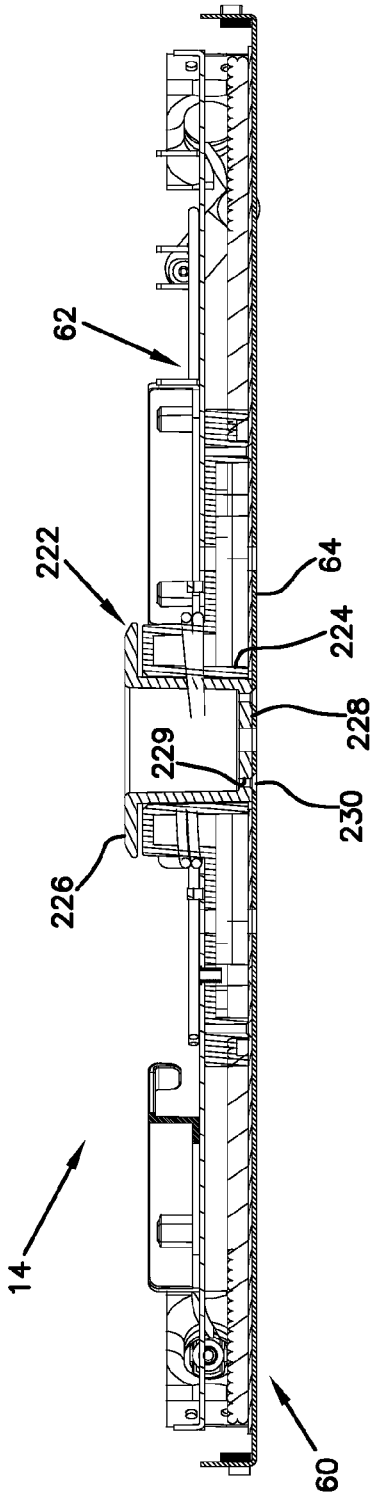

FIG. 22

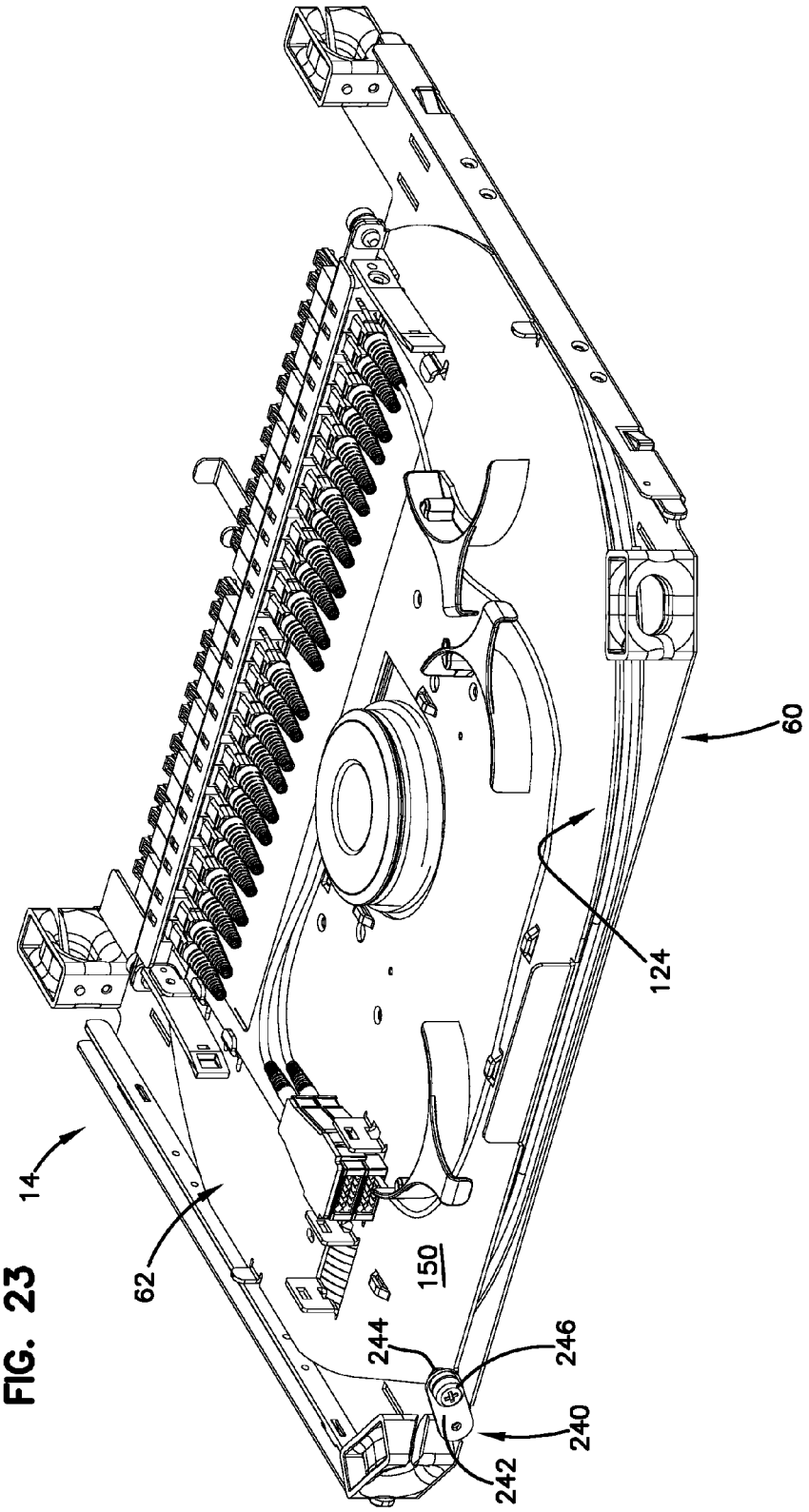

FIG. 23

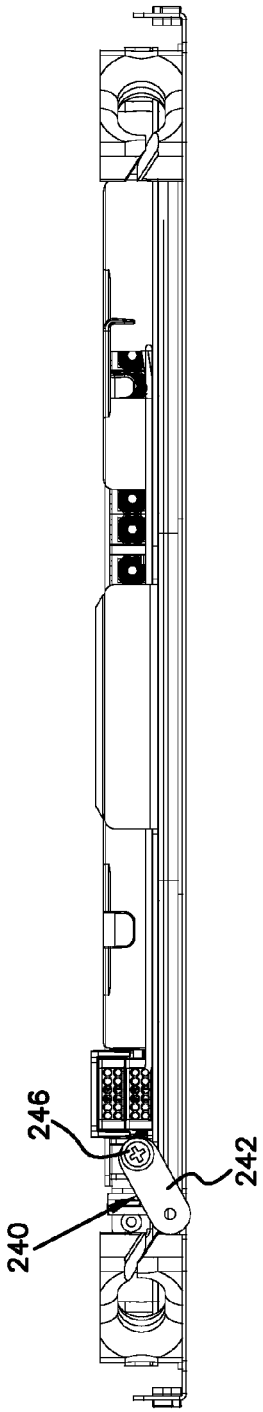

FIG. 24

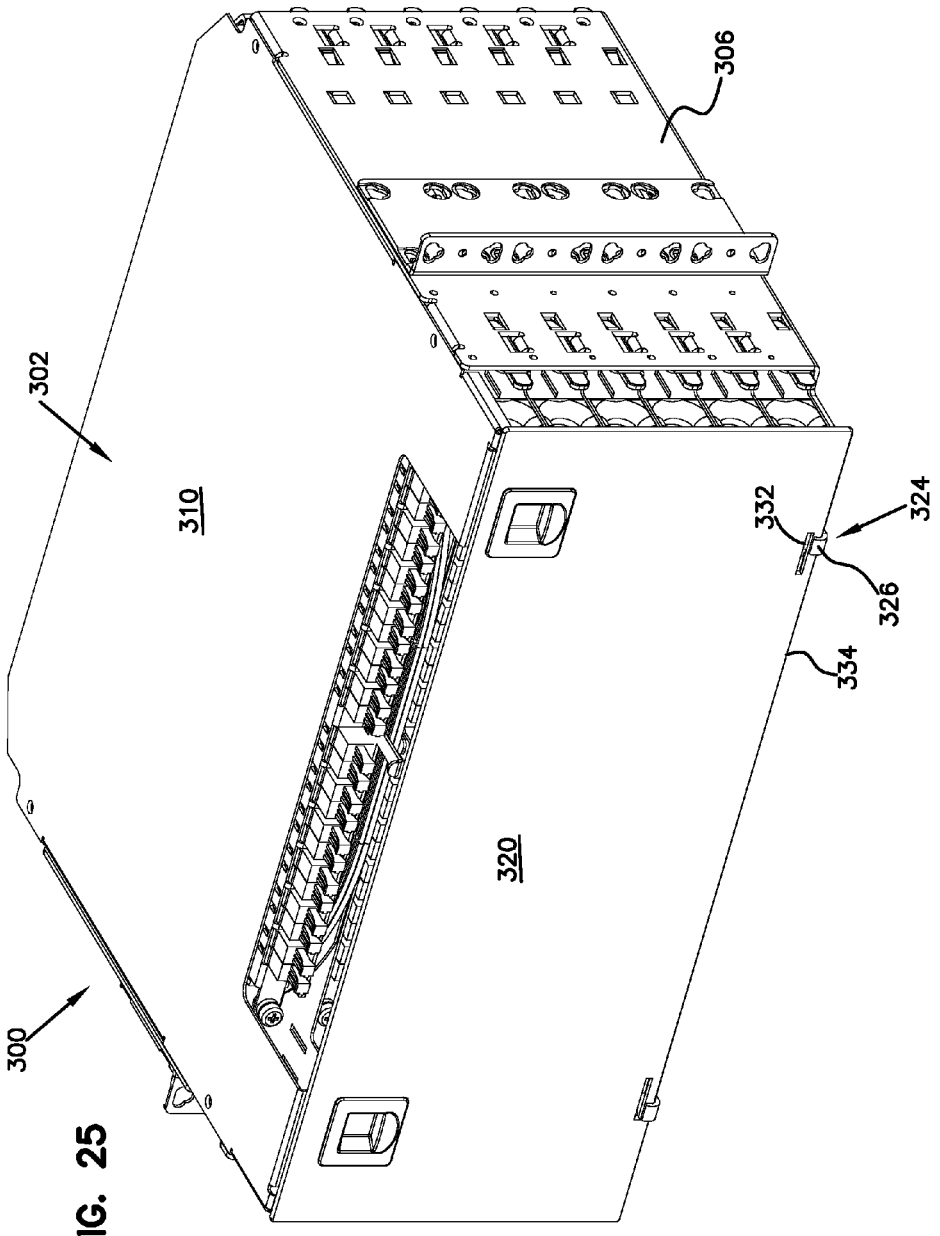

FIG. 25

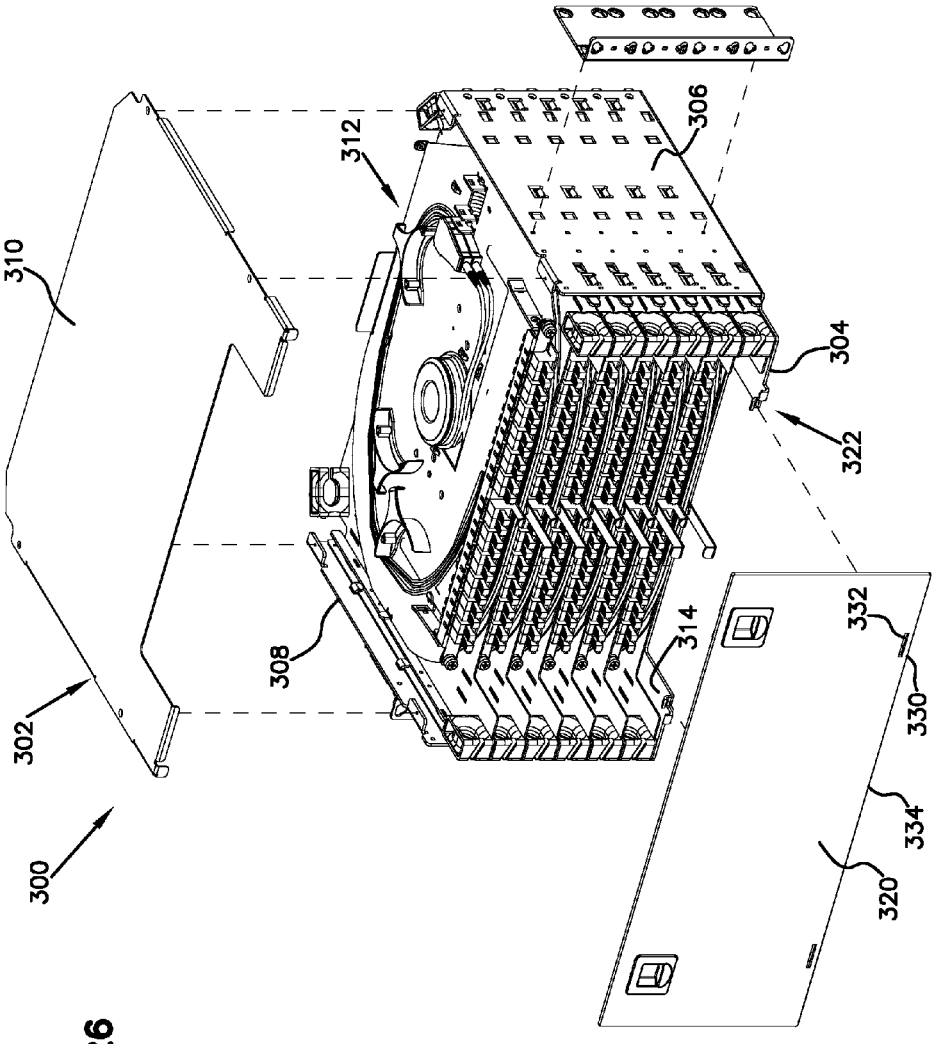

FIG. 26

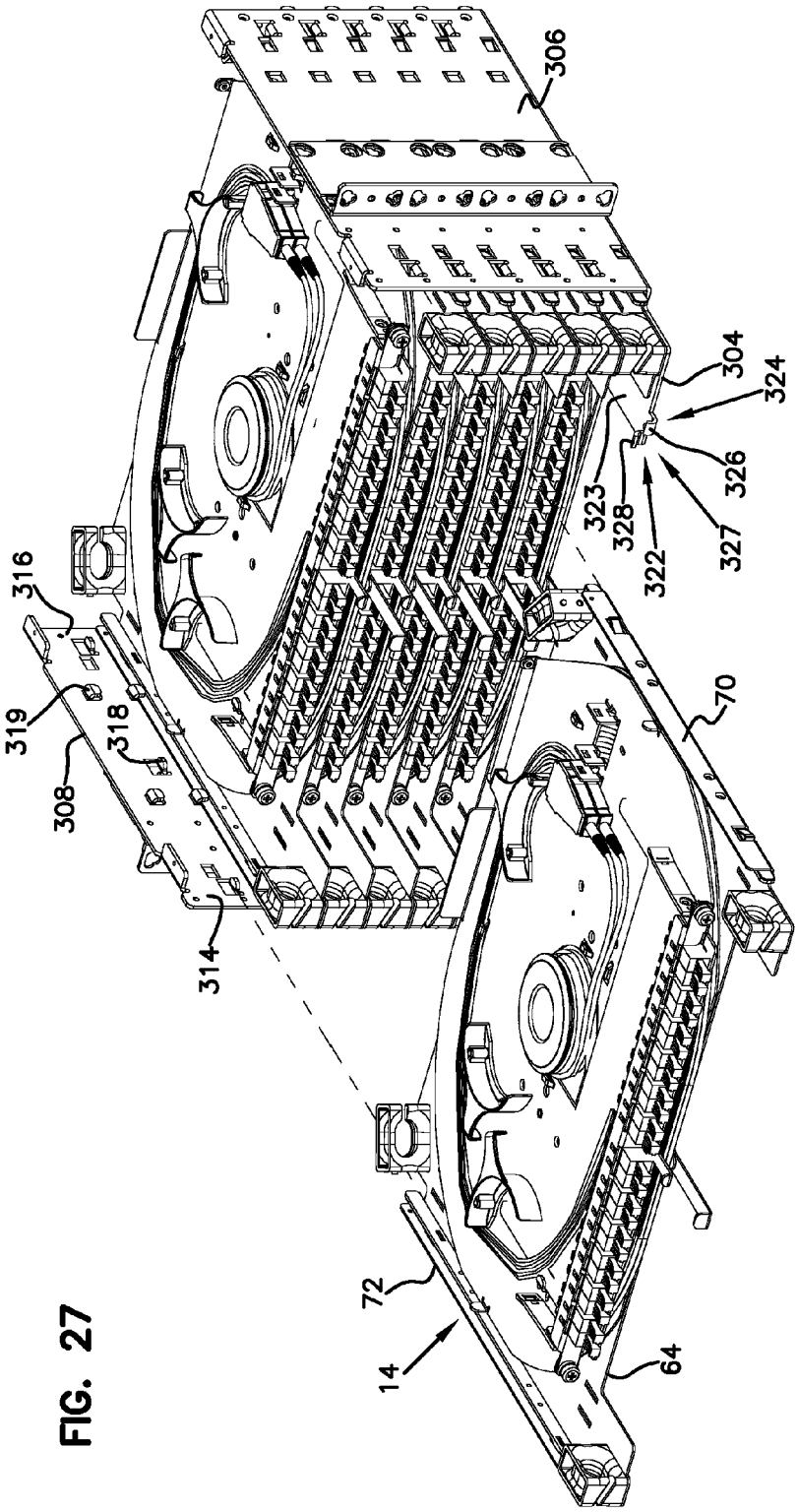

FIG. 27

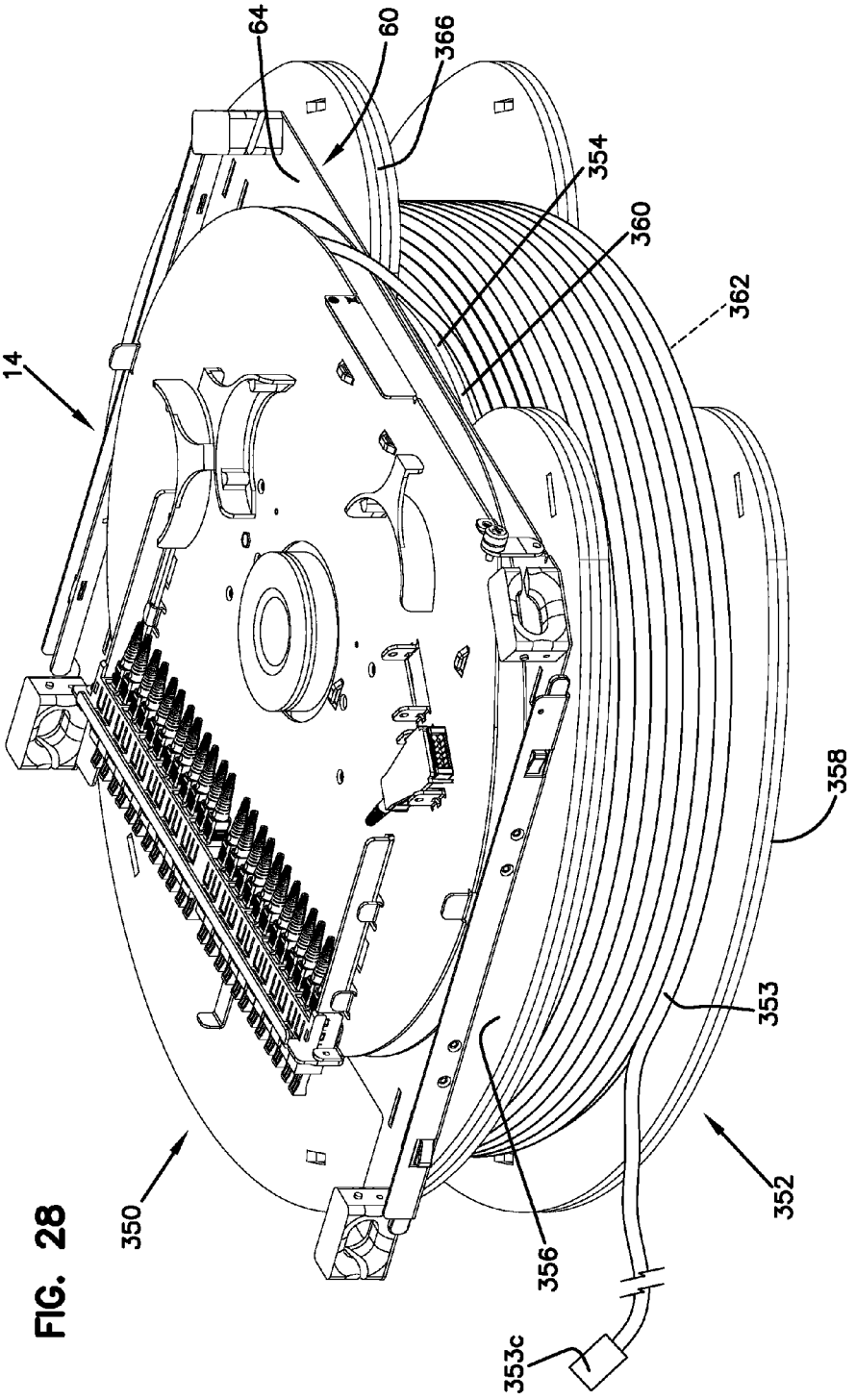

FIG. 28

FIG. 29

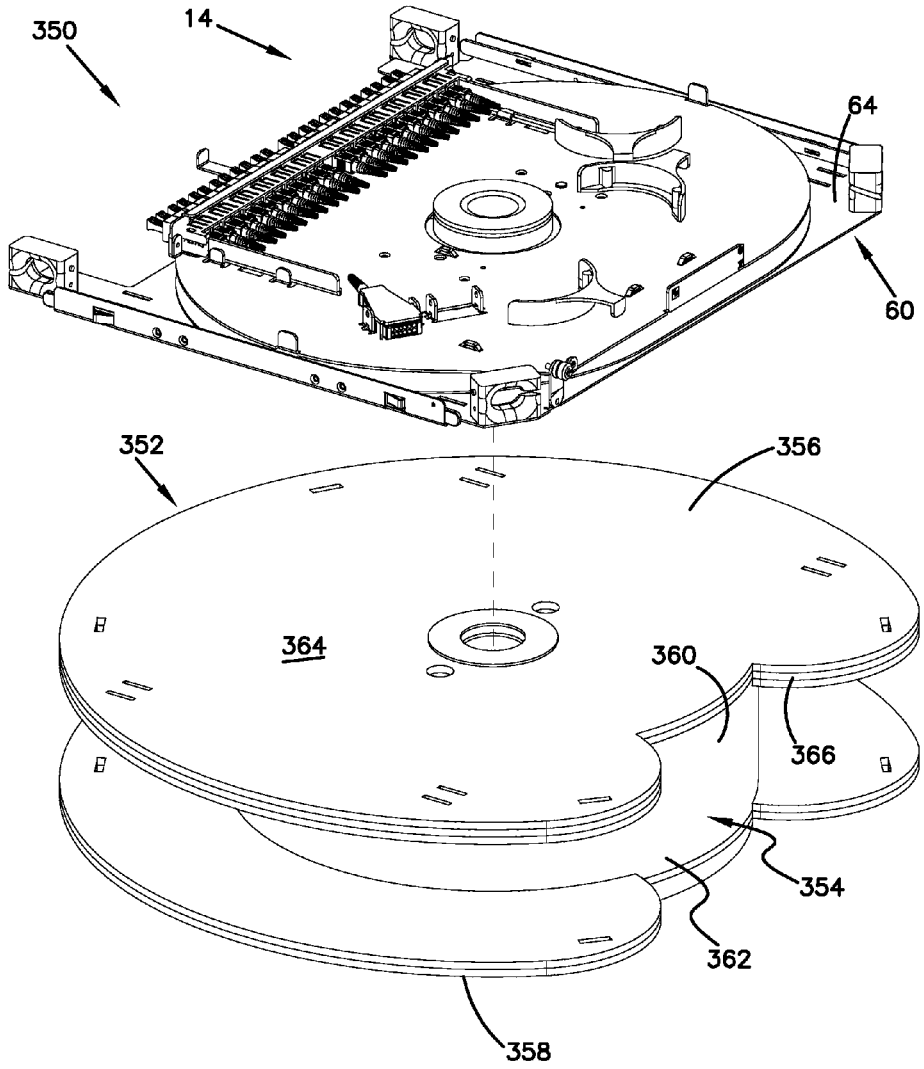

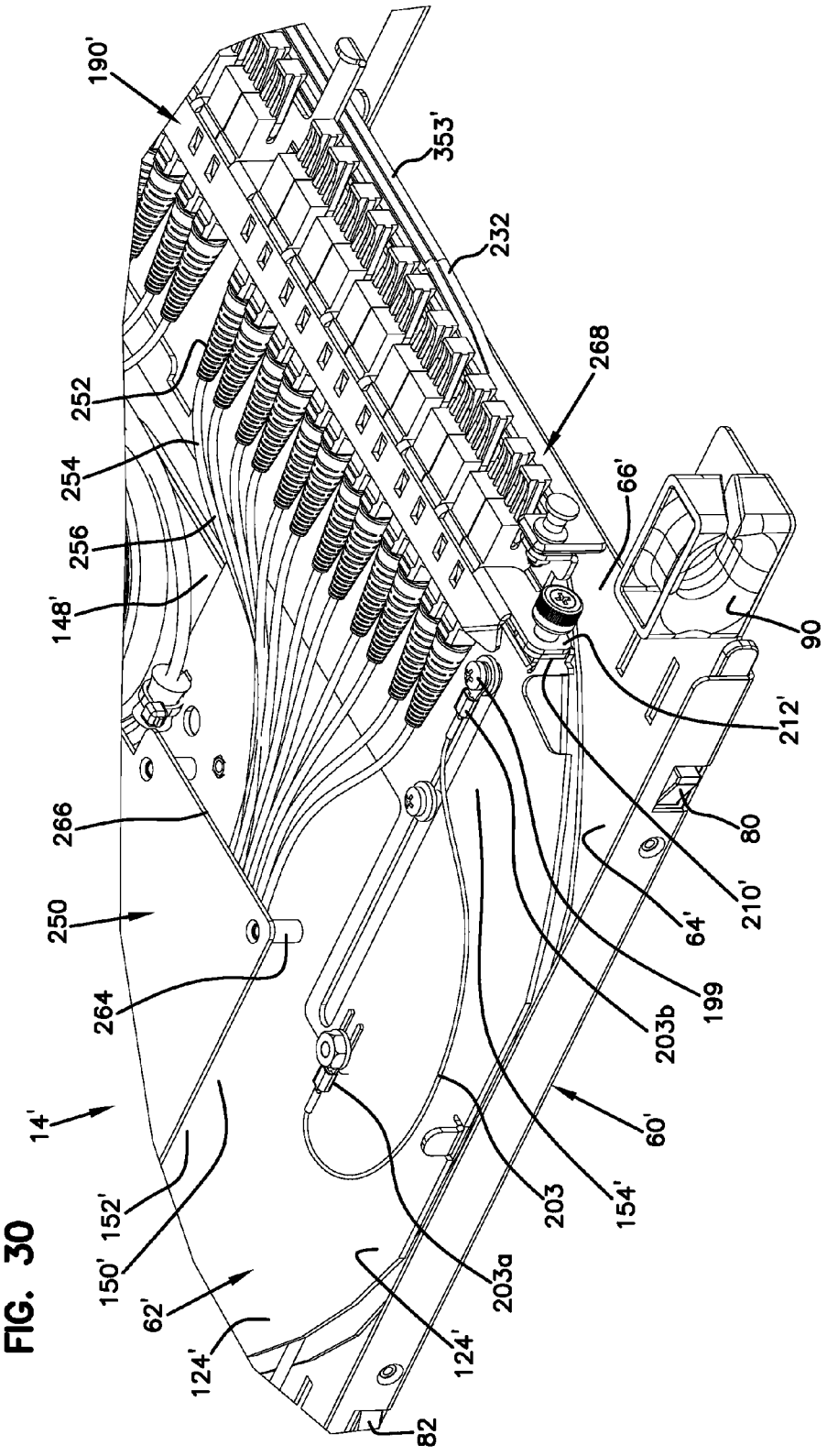
190'
353'
232
268
252
254
256
148'
66'
90
212'
80
210'
64'
199
203b
266
250
264
14'
60'
203
154'
152'
150'
62'
203a
124'
124'
82

FIG. 30

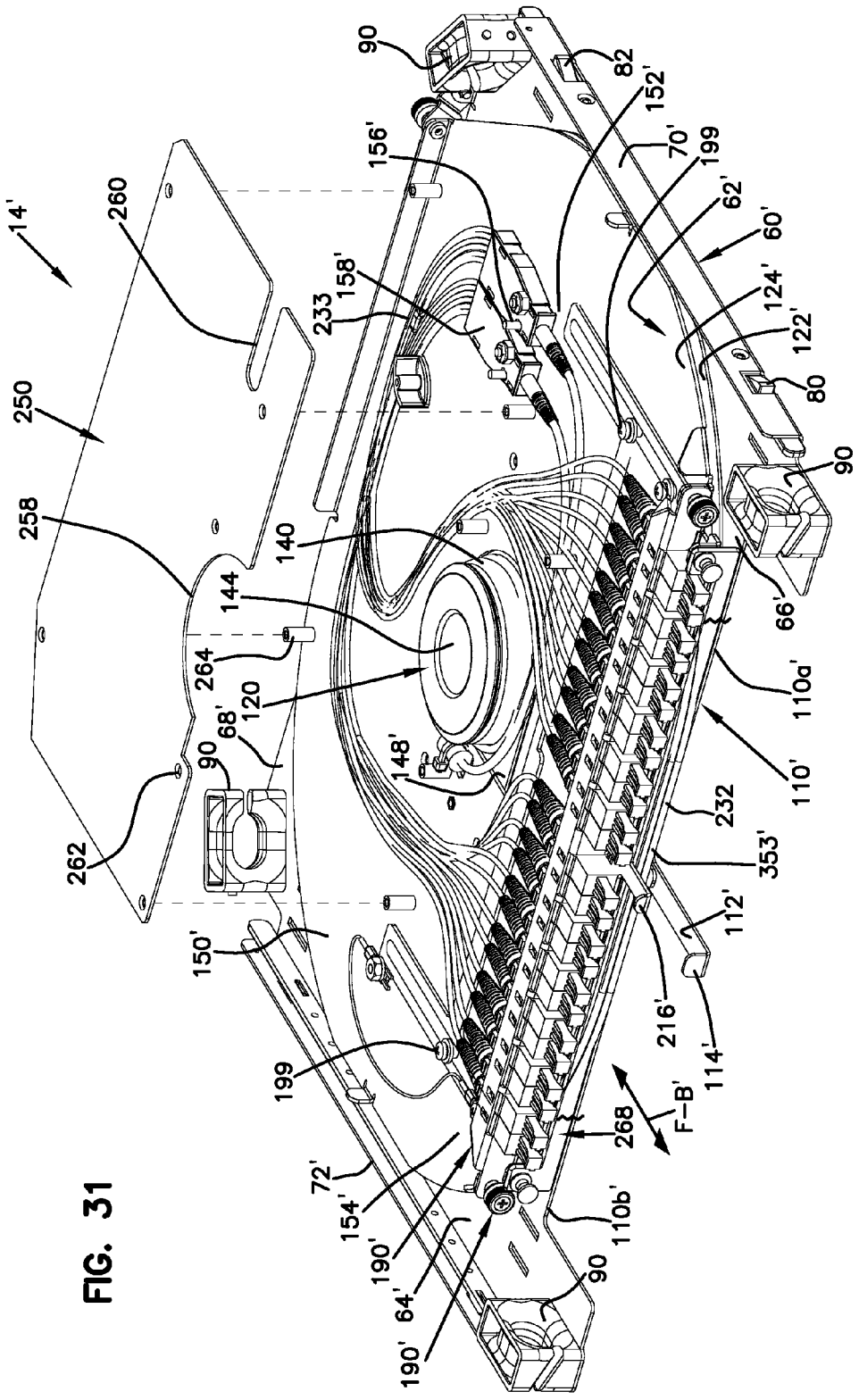
14'
250
260
258
262
264
90
68'
120
144
140
233
158'
156'
90
82
152'
70'
199
62'
60'
124'
122'
80
90
66'
110a'
110'
232
353'
112'
114'
216'
F-B'
268
110b'
90
150'
199
72'
154'
190'
64'
190'

FIG. 31

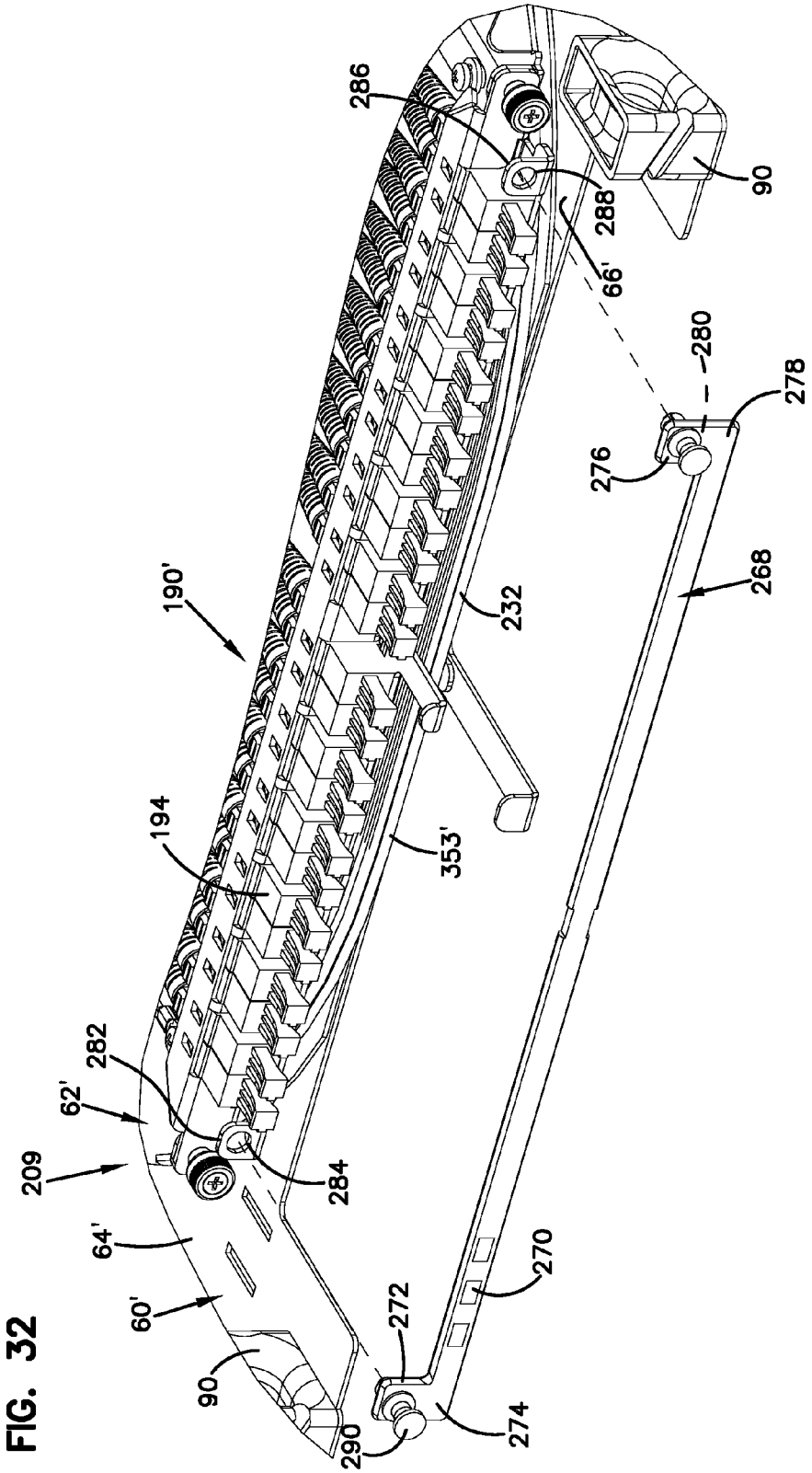
286
288
90
66'
280
278
276
268
190'
232
194
353'
282
62'
209
284
64'
60'
90
272
270
274
290

FIG. 32

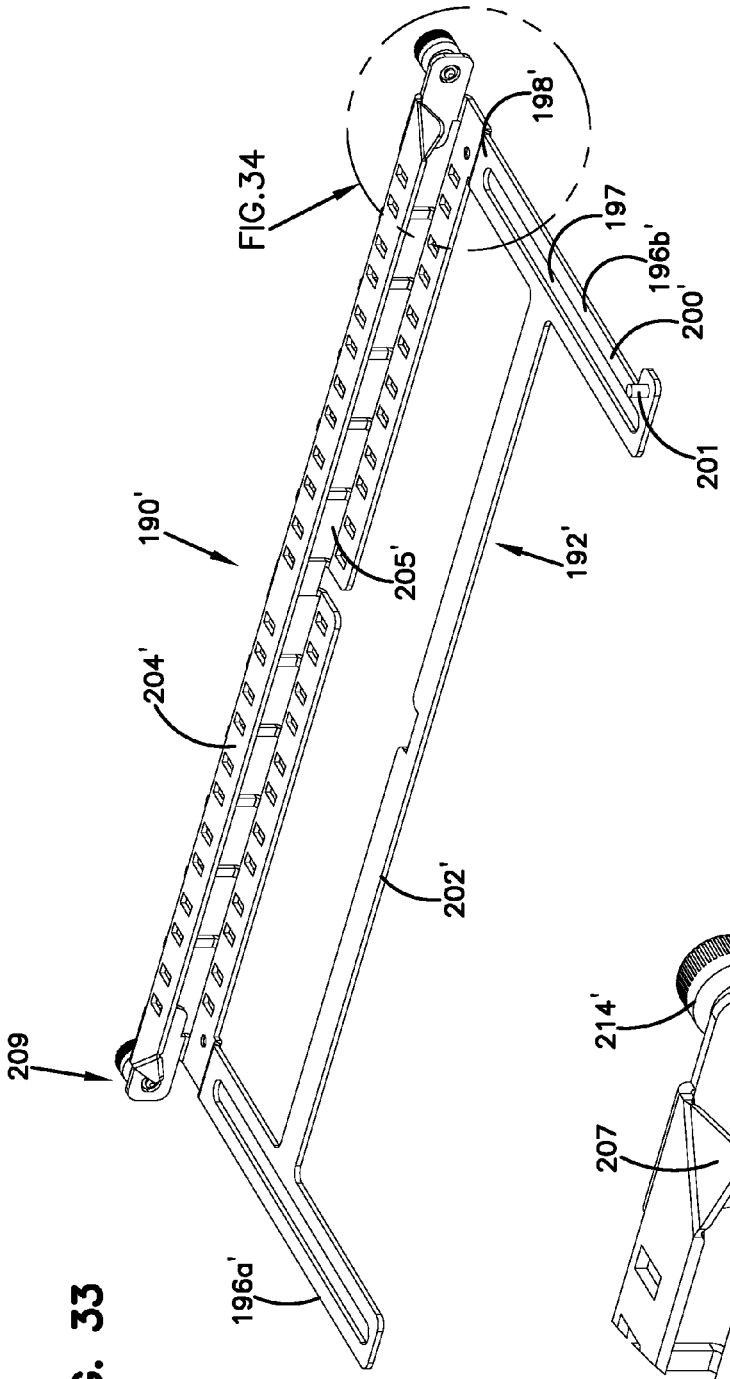
FIG.34
198'
197
196b'
200'
201
190'
205'
192'
204'
202'
209
196a'

FIG. 33

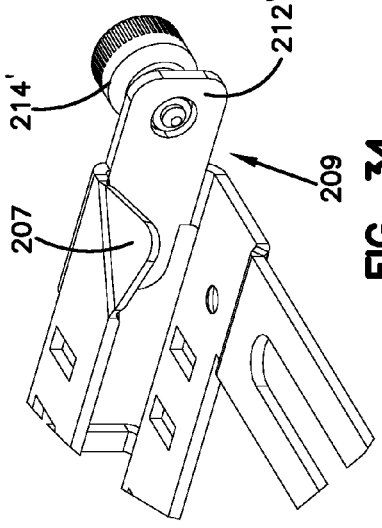
212'
214'
209
207

FIG. 34

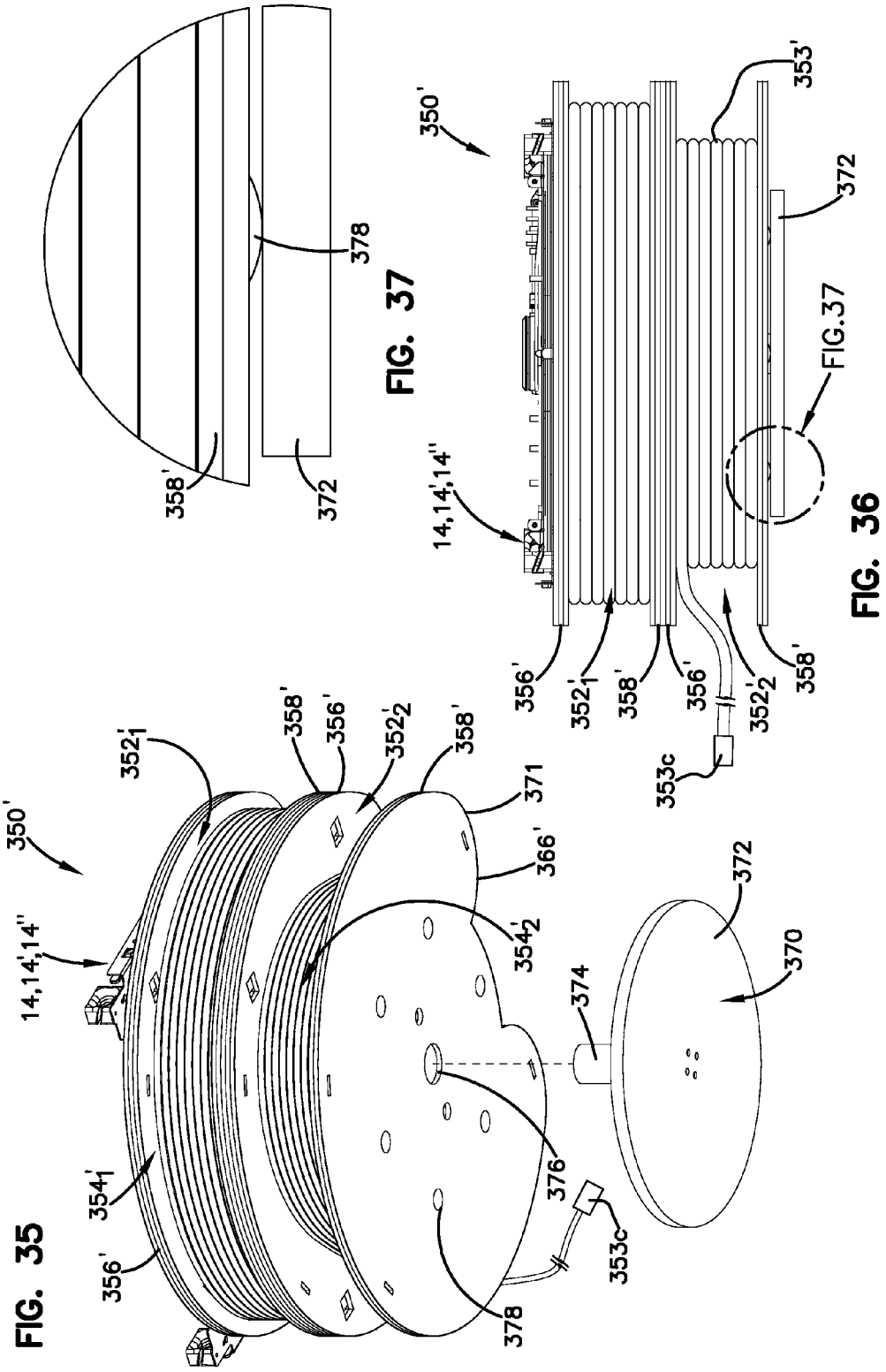
350'
14,14',14''
352'1
356'
358'
352'2
358'
371
366'
354'2
374
372
370
376
353c
378
354'1
356'
FIG. 35
358'
372
378
FIG. 37
350'
353'
372
FIG.37
14,14',14''
356'
352'1
358'
356'
352'2
358'
353c
FIG. 36

FIG. 38

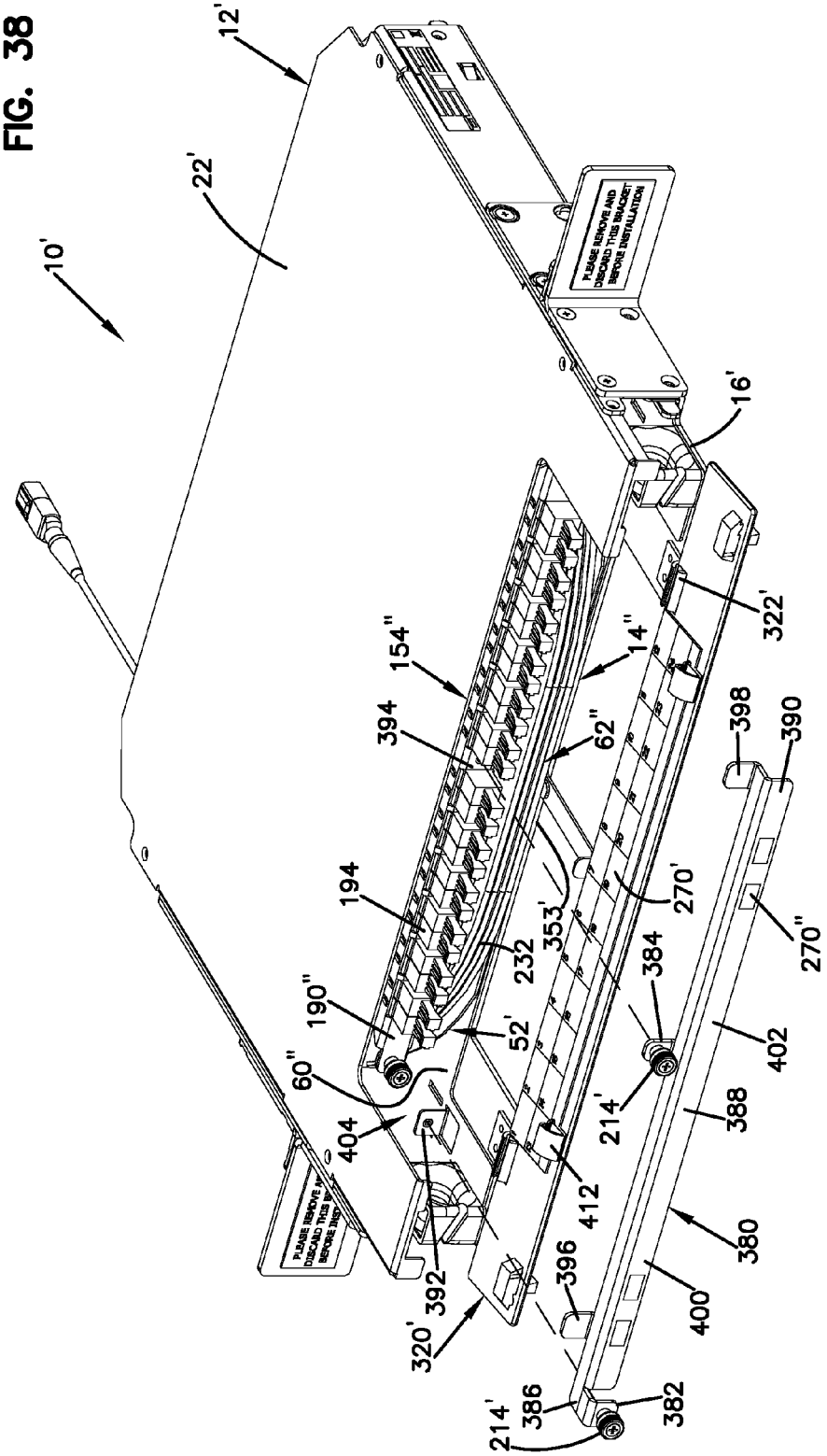
10'
12'
22'
16'
322'
14"
154"
394
62"
398
390
194
270'
353'
232
270"
384
190"
52'
402
60"
214'
388
404
412
380
396
392
400
320'
386
382
214'

FIG. 39

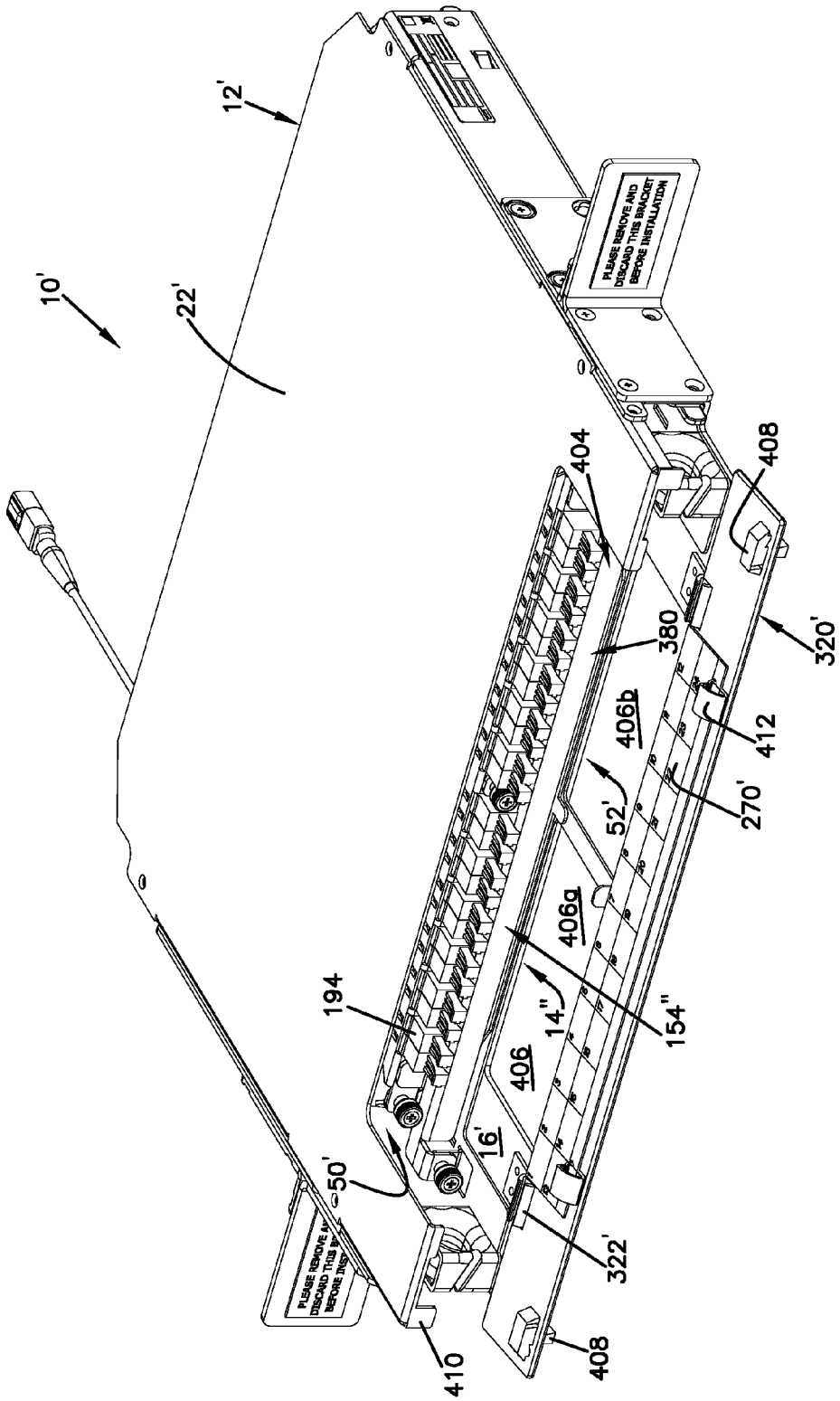
12'
10'
22'
PLEASE REMOVE AND DISCARD THIS BRACKET BEFORE INSTALLATION
404
408
380
320'
406b
412
52'
270'
406g
194
14"
154"
406
16'
50'
322'
410
408

FIG. 40

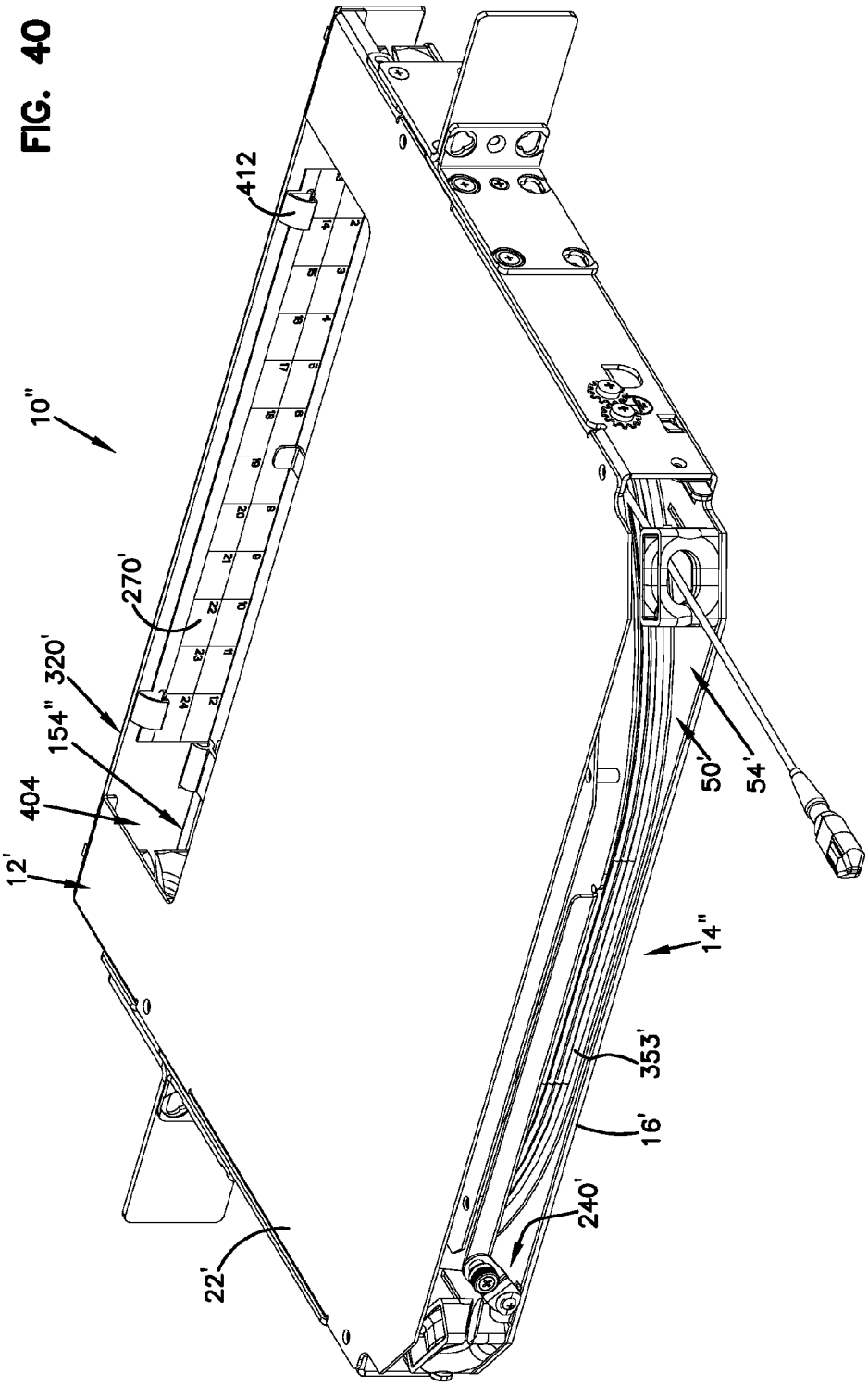

TELECOMMUNICATIONS ASSEMBLY

CROSS-REFERENCE TO RELATED APPLICATIONS

The present application is a continuation of U.S. patent application Ser. No. 14/060,223, filed Oct. 22, 2013, now U.S. Pat. No. 8,938,147, issued Jan. 20, 2015, which is a continuation of U.S. patent application Ser. No. 13/167,550, filed Jun. 23, 2011, now U.S. Pat. No. 8,565,572, issued Oct. 22, 2013, which claims the benefit of U.S. Provisional Patent Application Ser. Nos. 61/487,542, filed May 18, 2011; 61/378,710, filed Aug. 31, 2010; and 61/357,898, filed Jun. 23, 2010, which applications are hereby incorporated by reference in their entireties.

FIELD

The inventive aspects of this disclosure pertain to devices and methods for deploying, routing, housing, storing, shipping, connecting, and managing telecommunications cable and connections.

BACKGROUND

Telecommunication cabling systems typically include cabinets that house terminations and connections/interconnections of telecommunication cables. The telecommunication cables can include electrical cable, fiber optic cable, and/or hybrid cable that includes both electrical and optical conductors. The cabinets typically allow terminations of the various cables to be connected, disconnected, and/or reconnected to other terminations of the various cables. In this way, the routing of signals across a telecommunications network can be configured and reconfigured as desired. For example, a trunk cable from a main office of a telecommunications provider or a data center may be branched to various branch cables at the cabinet. Each of the branch cables may then be routed to an end-user or to another cabinet.

The telecommunications cable can be stored on, delivered on, and deployed by spools. The cable is typically wound on the spool at a factory that produced the cable. Upon delivery to an installation site, the cable can be unwound from the spool and deployed. The cabinet can hold terminations/connectors of the cables that are routed to it.

SUMMARY

An aspect of the present disclosure relates to a telecommunications assembly having a chassis defining an interior region and a tray assembly disposed in the interior region. The tray assembly includes a tray and a cable spool assembly. The cable spool assembly is engaged to a base panel of the tray. The cable spool assembly is adapted to rotate relative to the tray. The cable spool assembly includes a hub, a flange engaged to the hub and an adapter module. The flange defines a termination area. The adapter module is engaged to the termination module of the flange. The adapter module is adapted to slide relative to the flange in a direction that is generally parallel to the flange between an extended position and a retracted position.

Another aspect of the present disclosure relates to a telecommunications assembly. The telecommunications assembly includes a chassis that is adapted for connection to a rack. A tray assembly is removably mounted in the chassis. The tray assembly includes a tray, a cable spool rotatably mounted to the tray and a plurality of adapters mounted to the tray. The tray assembly can be inserted into and removed from the chassis as a unit without requiring the cable spool or the plurality of adapters to be detached from the tray. The tray carries the cable spool and the plurality of adapters during insertion and removal.

Another aspect of the present disclosure relates to a cable assembly. The cable assembly includes a first cable spool. The first cable spool includes a drum having a first axial end and an oppositely disposed second axial end. A first flange is engaged to the first axial end of the drum while a second flange is engaged to the second axial end of the drum. A tray assembly is mounted to an outer surface of the first flange of the cable spool. The tray assembly includes a tray that defines a lateral direction and a front-to-back direction that is generally perpendicular to the lateral direction. A second cable spool is rotatably mounted to the tray. A plurality of adapters is slidably mounted to the second cable spool of the tray assembly. The plurality of adapters is adapted to slide relative to the tray in a direction that is generally parallel to the front-to-back direction.

Another aspect of the present disclosure relates to a telecommunications apparatus. The telecommunications apparatus includes a tray, a first spool, a plurality of fiber optic adapters, a second spool, and a fiber optic cable assembly. The tray is configured to mount within a housing. The housing is adapted for connection to a telecommunications rack. The tray includes a base having a top side and a bottom side. The first spool is mounted to the tray at a location above the top side of the base. The first spool is rotatable relative to the tray. The fiber optic adapters are carried by the first spool when the first spool is rotated relative to the tray. The second spool is mounted to the tray at a location below the bottom side of the base. The fiber optic cable assembly includes a main cable portion that is spooled about the first spool and is also spooled about the second spool. The main cable portion includes a jacket containing a plurality of optical fibers. The fiber optic cable assembly also includes a broken-out portion where the optical fibers are broken-out from the jacket and incorporated into separate pigtails having connectorized ends that are received within the fiber optic adapters. The connectorized pigtails extend at least partially along a fiber routing path that extends along the top side of the base of the tray from the first spool to the fiber optic adapters. The second spool is mounted to the tray such that the tray rotates in concert with the second spool when the main cable portion of the fiber optic cable assembly is paid out from the second spool. The first spool rotates relative to the tray when the main cable portion of the fiber optic cable assembly is paid out from the first spool.

Another aspect of the present disclosure relates to a telecommunications apparatus. The telecommunications apparatus includes a tray, a first spool, at least one fiber optic adapter, a second spool, and a fiber optic cable. The tray is configured to mount within a housing that is adapted for connection to a telecommunications rack. The tray includes a base having a top side and a bottom side. The first spool is mounted to the tray at a location above the top side of the base. The first spool is rotatable relative to the tray. The at least one fiber optic adapter is carried by the first spool when the first spool is rotated relative to the tray. The second spool is mounted to the tray at a location below the bottom side of the base. The fiber optic cable is spooled about the first spool and is also spooled about the second spool. The second spool is mounted to the tray such that the tray rotates in concert with the second spool when the fiber optic cable is paid out from the second spool. The first spool rotates relative to the tray when the fiber optic cable is paid out from the first spool.

Another aspect of the present disclosure relates to a telecommunications apparatus. The telecommunications apparatus includes a housing, a tray, a first spool, and a fiber optic cable. The housing is adapted for connection to a telecommunications rack. The housing includes a housing body that defines a cross-dimension, a height, and a depth. The cross-dimension is measured in a direction perpendicular relative to the height and the depth. The housing also including flanges for fastening the housing body to the telecommunications rack. The flanges are separated from one another by the cross-dimension of the housing. The tray can be inserted into the housing and removed from the housing. The first spool is mounted to the tray. The first spool is rotatable relative to the tray about an axis of rotation. The first spool includes first and second flanges that are spaced apart along the axis of rotation. The first spool also includes a core aligned along the axis of rotation and positioned between the first and second flanges. The core defines an elongated spooling path that defines a major dimension and a minor dimension. The fiber optic cable is spooled about the elongated spooling path of the core. The first spool rotates about the axis of rotation relative to the tray when the fiber optic cable is paid out from the first spool.

Another aspect of the present disclosure relates to a telecommunications apparatus. The telecommunications apparatus includes a housing and a tray. The housing is adapted for connection to a telecommunications rack. The housing includes a housing body that defines a cross-dimension, a height, and a depth. The cross-dimension is measured in a direction perpendicular relative to the height and the depth. The housing also includes flanges for fastening the housing body to the telecommunications rack. The flanges are separated from one another by the cross-dimension of the housing body. The housing body includes front and back ends that are separated by the depth of the housing body. The tray can be mounted in the housing body. The tray carries at least one fiber optic adapter. The housing body and the tray are configured such that: a) the tray can be inserted into the housing body and removed from the housing body through the front end of the housing body; and b) the tray can be inserted into the housing body and removed from the housing body through the back end of the housing body.

A variety of additional aspects will be set forth in the description that follows. These aspects can relate to individual features and to combinations of features. It is to be understood that both the foregoing general description and the following detailed description are exemplary and explanatory only and are not restrictive of the broad concepts upon which the embodiments disclosed herein are based.

BRIEF DESCRIPTION OF THE DRAWINGS

FIG. **1** is a perspective view of a telecommunications assembly having exemplary features of aspects in accordance with the principles of the present disclosure;

FIG. **2** is a perspective view of the telecommunications assembly of FIG. **1**;

FIG. **3** is an exploded perspective view of the telecommunications assembly of FIG. **2**;

FIG. **4** is a rear perspective view of the telecommunications assembly of FIG. **2**;

FIG. **5** is a side view of the telecommunications assembly of FIG. **2**;

FIG. **6** is an exploded perspective view of the telecommunications assembly of FIG. **2**;

FIG. **7** is a perspective view of a tray assembly suitable for use with the telecommunications assembly of FIG. **2**;

FIG. **8** is an exploded perspective view of the tray assembly of FIG. **7**;

FIG. **9** is a perspective view of a bend radius protector suitable for use with the tray assembly of FIG. **7**;

FIG. **10** is a front view of the bend radius protector of FIG. **9**;

FIG. **11** is a side view of the bend radius protector of FIG. **9**;

FIG. **12** is a bottom view of the bend radius protector of FIG. **9**;

FIG. **13** is a perspective view of a cable spool assembly suitable for use with the tray assembly of FIG. **7**;

FIG. **14** is an exploded view of the cable spool assembly of FIG. **13**;

FIG. **15** is a perspective view of a fan-out clip suitable for use with the tray assembly of FIG. **7**;

FIG. **16** is a front view of the fan-out clip of FIG. **15**;

FIG. **17** is a side view of the fan-out clip of FIG. **15**;

FIG. **18** is a top view of the fan-out clip of FIG. **15**;

FIG. **19** is a perspective view of the tray assembly of FIG. **7** showing an adapter module;

FIG. **20** is a perspective view of the tray assembly of FIG. **7** with the adapter module in an extended position;

FIG. **21** is a perspective view of a bushing suitable for use with the tray assembly;

FIG. **22** is a cross-sectional view of the tray assembly taken through the bushing;

FIG. **23** is a perspective view of a locking mechanism suitable for use with the tray assembly of FIG. **7**;

FIG. **24** is a view of the locking mechanism of FIG. **23**;

FIG. **25** is an alternate embodiment of a telecommunications assembly having exemplary features of aspects in accordance with the principles of the present disclosure;

FIG. **26** is an exploded perspective view of the telecommunications assembly of FIG. **25**;

FIG. **27** is a perspective view of the telecommunications assembly of FIG. **25** with a tray removed;

FIG. **28** is a perspective view of a cable assembly;

FIG. **29** is an exploded perspective view of the cable assembly of FIG. **28**;

FIG. **30** is a partial perspective view of a tray assembly suitable for use with the telecommunications assembly of FIG. **2**;

FIG. **31** is an exploded perspective view of the tray assembly of FIG. **30**;

FIG. **32** is an exploded partial perspective view of the tray assembly of FIG. **30**;

FIG. **33** is a perspective view of an adapter module of the tray assembly of FIG. **30**;

FIG. **34** is an enlarged portion of the perspective view of FIG. **33**;

FIG. **35** is an exploded perspective view of a cable assembly;

FIG. **36** is a side view of the cable assembly of FIG. **35**;

FIG. **37** is an enlarged portion of the side view of FIG. **36**;

FIG. **38** is an exploded perspective view of a telecommunications assembly having exemplary features of aspects in accordance with the principles of the present disclosure;

FIG. **39** is a perspective view of the telecommunications assembly of FIG. **38**; and

FIG. **40** is a perspective view of a telecommunications assembly having exemplary features of aspects in accordance with the principles of the present disclosure.

DETAILED DESCRIPTION

Reference will now be made in detail to the exemplary aspects of the present disclosure that are illustrated in the

accompanying drawings. Wherever possible, the same reference numbers will be used throughout the drawings to refer to the same or like structure.

Referring now to FIGS. **1-3**, a telecommunications assembly **10** is shown. The telecommunications assembly **10** includes a chassis **12** (e.g., an enclosure, a case, etc.) and a tray assembly **14** (e.g., a shelf assembly, a drawer assembly, etc.) that removably mounts in the chassis **12**. The telecommunications assembly **10** is adapted for mounting to a telecommunications rack **15**.

Referring now to FIGS. **1-6**, the chassis **12** will be described. The chassis **12** is adapted for connection to the rack **15**. In the depicted embodiment, the chassis **12** is generally rectangular in shape. The chassis **12** includes a base **16**, a first sidewall **18**, an oppositely disposed second sidewall **20** and a cover **22**. The base **16** includes a first end **24**, an oppositely disposed second end **26**, a first side **28** that extends between the first and second ends **24**, **26** and an oppositely disposed second side **30**. In the depicted embodiment, the first end **24** is a front end of the base **16** while the second end **26** is a back end. In one embodiment, the chassis **12** includes a major dimension W, which is measured from the first side **28** to the second side **30**, and a minor dimension D, which is measured from the first end **24** to the second end **26**. In the depicted embodiment, the major dimension W is greater than the minor dimension D.

The first and second sidewalls **18**, **20** extend outwardly from the base **16**. In the depicted embodiment, the first and second sidewalls **18**, **20** extend outwardly in a direction that is generally perpendicular to the base **16**. In another embodiment, the first and second sidewalls **18**, **20** extend outwardly from the base **16** at an oblique angle.

The first sidewall **18** is disposed at the first side **28** of the base **16** while the second sidewall **20** is disposed at the second side **30** of the base **16**. The first sidewall **18** includes a first end **32***a*, an oppositely disposed second end **32***b*, a first side **34***a* that extends between the first and second ends **32***a*, **32***b* of the first sidewall **18** and an oppositely disposed second side **34***b*. The second sidewall **20** includes a first end **36***a*, an oppositely disposed second end **36***b*, a first side **38***a* that extends between the first and second ends **36***a*, **36***b* of the second sidewall **20** and an oppositely disposed second side **38***b*.

The first side **34***a* of the first sidewall **18** is engaged to the first side **28** of the base **16** so that the first end **32***a* of the first sidewall **18** is adjacent to the first end **24** of the base **16**. The first side **38***a* of the second sidewall **20** is engaged to the second side **30** of the base **16** so that the first end **36***a* of the second sidewall **20** is adjacent to the first end **24** of the base **16**. In the depicted embodiment, the first sides **34***a*, **38***a* of the first and second sidewalls **18**, **20** are integral with the base **16**. In another embodiment, the first sides **34***a*, **38***a* of the first and second sidewalls **18**, **20** are fastened (e.g., welded, pop riveted, bolted, screwed, glued, etc.) to the base **16**.

The second sides **34***b*, **38***b* of the first and second sidewalls **18**, **20** are engaged to the cover **22**. In the depicted embodiment, the second sides **34***b*, **38***b* include tabs **40** that are engaged to the cover **22** by fasteners (e.g., screws, bolts, rivets, welds, adhesive, etc.).

Each of the first and second sidewalls **18**, **20** includes a mounting bracket **42**. In the depicted embodiment, the mounting bracket **42** is generally L-shaped. The mounting bracket **42** includes a first end portion **44** that mounts to one of the first and second sidewalls **18**, **20** and a second end portion **46** that is adapted for engagement with the rack **15**. In the depicted embodiment, the first end portion **44** is engaged to the first and second sidewalls **18**, **20** by a plurality of fasteners (e.g., screws, bolts, rivets, welds, adhesive, etc.).

Each of the first and second sidewalls **18**, **20** define a plurality of holes **48**. In the depicted embodiment, the holes **48** are disposed adjacent to the first sides **34***a*, **38***a* of the first and second sidewalls **18**, **20**. In the depicted embodiment, the holes **48** are generally rectangular in shape.

The base **16**, the first and second sidewalls **18**, **20** and the cover **22** cooperatively define an interior region **50**. The interior region **50** is adapted to receive the tray assembly **14**.

The first ends **32***a*, **36***a* of the first and second sidewalls **18**, **20** and the first end **24** of the base **16** cooperatively define a first opening **52**. The first opening **52** provides access to the interior region **50**. In the depicted embodiment, the first opening **52** is a front opening to the interior region **50**.

The second ends **32***b*, **36***b* of the first and second sidewalls **18**, **20** and the second end **26** of the base **16** cooperatively define a second opening **54**. The second opening **54** provides access to the interior region **50**. In the depicted embodiment, the second opening **54** is oppositely disposed from the first opening **52**. In the depicted embodiment, the second opening **54** is a back opening.

Referring now to FIGS. **7** and **8**, the tray assembly **14** is shown. The tray assembly **14** includes a tray **60** (e.g., a shelf, a drawer, etc.) and a cable spool assembly **62** rotatably mounted to the tray **60**. The tray assembly **14** is adapted for insertion and removal from the chassis **12** as a unit without requiring the cable spool assembly **62** to be detached from the tray **60**.

The tray **60** includes a base panel **64** having a first end portion **66** (e.g., a front end portion), an oppositely disposed second end portion **68** (e.g., a back end portion), a first side portion **70** that extends at least partially between the first and second end portions **66**, **68** and an oppositely disposed second side portion **72** that extends at least partially between the first and second end portions **66**, **68**. In the depicted embodiment, the first and second side portions **70**, **72** extend outwardly from the base panel **64** in a generally perpendicular direction.

The tray **60** defines a lateral direction L and a front-to-back direction F-B. The lateral direction L extends between the first and second side portions **70**, **72**. In the depicted embodiment, the lateral direction L is generally perpendicular to the first and second side portions **70**, **72**. The front-to-back direction F-B extends between the first and second end portions **66**, **68**. The front-to-back direction F-B is generally perpendicular to the lateral direction L.

The tray **60** includes a plurality of resilient latches **74**. In the depicted embodiment, the tray **60** includes a first resilient latch **74***a* engaged to the first side portion **70** and a second resilient latch **74***b* engaged to the second side portion **72**.

In the depicted embodiment, the resilient latch **74** includes a first axial end portion **76** and an oppositely disposed second axial end portion **78**. The first axial end portion **76** includes a first protrusion **80** while the second axial end portion **78** includes a second protrusion **82**. Each of the first and second protrusions **80**, **82** includes a lip **84** and an angled surface **86**. The first and second protrusions **80**, **82** are oppositely disposed on the resilient latch **74** so that the lip **84** of the first protrusion **80** faces the first end portion **66** of the base panel **64** while the lip **84** of the second protrusion **82** faces the second end portion **68** of the base panel **64**. The angled surface **86** of the first protrusion **80** flares outwardly toward the first axial end portion **76** while the angled surface **86** of the second protrusion **82** flares outwardly toward the second axial end portion **78**.

The first resilient latch **74***a* is secured to the first side portion **70** by a plurality of fasteners (e.g., screws, bolts, rivets, welds, adhesive, etc.). The first resilient latch **74***a* is secured to the first side portion **70** at a location disposed

between the first and second axial end portions **76**, **78** of the first resilient latch **74***a*. In the depicted embodiment, the first resilient latch **74***a* is secured to the first side portion **70** at a location disposed between the first and second protrusions **80**, **82**.

The second resilient latch **74***b* is secured to the second side portion **72** by a plurality of fasteners (e.g., screws, bolts, rivets, welds, adhesive, etc.). The second resilient latch **74***b* is secured to the second side portion **72** at a location disposed between the first and second axial ends **76**, **78** of the second resilient latch **74***b*. In the depicted embodiment, the second resilient latch **74***b* is secured to the second side portion **72** at a location disposed between the first and second protrusions **80**, **82** of the second resilient latch **74***b*.

In the depicted embodiment, the first and second side portions **70**, **72** of the base panel **64** include a plurality of openings **88** through which the first and second protrusions **80**, **82** extend. Each of the first and second axial ends **76**, **78** of the first and second resilient latches **74***a*, **74***b* is adapted to flex inwardly toward the tray **60**. As the first axial ends **76** of the first and second resilient latches **74***a*, **74***b* flex inwardly, the distance that the first protrusion **80** extends outwardly through the openings **88** decreases.

Referring now to FIGS. **8-12**, the tray **60** includes a plurality of bend radius protectors **90**. A first plurality of bend radius protectors **90***a* is disposed adjacent to the first end portion **66** of the base panel **64**. A second plurality of bend radius protectors **90***b* is disposed adjacent to the second end **68** of the base panel **64**.

In the depicted embodiment, the bend radius protector **90** includes a body **92** having a first end surface **94** and an oppositely disposed second end surface **96**. The body **92** defines a passage **98** that extends through the first and second end surfaces **94**, **96**. In the depicted embodiment, the passage **98** is generally oblong in shape. The passage **98** includes a first arcuate edge **100** at the first end surface **94** and a second arcuate edge **102** at the second end surface **96**. Each of the first and second arcuate edges **100**, **102** includes a radius that is greater than the minimum bend radius of a fiber optic cable that passes through passage **98** so as to reduce the risk of attenuation damage to the fiber optic cable.

The body **92** encloses the passage **98**. A slot **104** is defined by a side **106** of the body **92**. The slot **104** extends through the side **106** of the body **92** and into the passage **98**. The slot **104** extends through the first and second end surface **94**, **96**. The slot **104** is adapted to allow a fiber optic cable to be inserted laterally into the passage **98** rather than threading the fiber optic cable through the passage **98**. In the depicted embodiment, the slot **104** is disposed at an angle relative to a central axis **108** that extends through the passage **98**. The slot **104** angles as it extends from the first end surface **94** to the second end surface **96**. In one embodiment, the angle is an oblique angle.

The first and second pluralities of bend radius protectors **90** are fastened to the base panel **64** of the tray **60**. In the depicted embodiments of FIGS. **9-12**, the bend radius protectors **90** include a pin **99** that is adapted for receipt in a hole in the base panel **64** of the tray **60** of the tray assembly **14**. The pin **99** and the fastener cooperatively secure the bend radius protectors to the base panel **64**.

In the depicted embodiments of FIG. **8**, the first plurality of bend radius protectors **90** is disposed at the first end portion **66** of the base panel **64** so that the central axes **108** that extend through the passages **98** of the first plurality of bend radius protectors **90** are aligned. In the depicted embodiment, the central axes **108** of the first plurality of bend radius protectors **90** are generally parallel to the lateral direction L.

The second plurality of bend radius protectors **90** is disposed at the second end portion **68** of the base panel **64** so that the central axes **108** of the bend radius protectors **90** are angled outwardly. In the depicted embodiment, the central axes **108** of the second plurality of bend radius protectors **90** are disposed at an oblique angle relative to the lateral direction L and the front-to-back direction F-B.

Referring now to FIG. **8**, the first end portion **66** of the tray **60** defines a recess **110**. A tab **112** extends from the base panel **64** into the recess **110** and separates the recess **110** into a first recess **110***a* and a second recess **110***b*. The tab **112** is generally coplanar with the base panel **64**. The tab **112** includes a free end **114** that extends in a direction that is generally perpendicular to the base panel **64**. In the depicted embodiment, the first and second recesses **110***a*, **110***b* are generally equal in size.

Referring now to FIGS. **7**, **8**, **13** and **14**, the cable spool assembly **62** will be described. The cable spool assembly **62** is adapted to rotate relative to the tray **60**. In the depicted embodiment, the cable spool assembly **62** is rotatably engaged to the base panel **64** of the tray **60**. The cable spool assembly **62** includes a stored position (shown in FIG. **7**). In one embodiment, the cable spool assembly **62** can be releasably secured in the stored position. The cable spool assembly **62** is adapted to be rotated from the stored position to deploy fiber optic cable wrapped about the cable spool assembly **62**.

The cable spool assembly **62** includes a hub **120**, a first flange **122** engaged to the hub **120** and a second flange **124** engaged to the hub **120** opposite the first flange **122**. The hub **120** includes a body **126** having a first surface **128** and an oppositely disposed second surface **130**. In one embodiment, the distance between the first and second surfaces **128**, **130** is less than or equal to about 0.75 inches. In another embodiment, the distance between the first and second surfaces **128**, **130** is less than or equal to about 0.5 inches. In another embodiment, the distance between the first and second surface **128**, **130** is in a range of about 0.25 inches to about 0.5 inches.

In the depicted embodiment, the body **126** of the hub **120** is generally oval in shape. The oval shape of the body **126** of the hub **120** allows for a greater length of fiber optic cable to be coiled around the body **126** for a given depth and width of the cable spool assembly **62**. The body **126** of the hub **120** includes a major dimension, as measured along a major axis of the body **126**, and a minor dimension, as measured along a minor axis. In the depicted embodiment, the major dimension is greater than the minor dimension. When in the stored position, the major axis is generally parallel to the lateral direction L. In another embodiment, the major axis is generally parallel to a plane that extends through the first opening **52** of the chassis **12** when the cable spool assembly **62** is in the stored position. While the body **126** of the hub **120** has been described as being oval in shape, it will be understood that the scope of the present disclosure is not limited to the body **126** of the hub **120** being oval in shape. The body **126** of the hub **120** can have various geometric shapes (e.g., circular, obround, etc.).

In one embodiment, the depth of the cable spool assembly **62** is less than or equal to about 16 inches. In another embodiment, the depth of the cable spool assembly **62** is less than or equal to about 15 inches. In another embodiment, the width of the cable spool assembly **62** is less than or equal to about 18 inches. In another embodiment, the width of the cable spool assembly **62** is less than or equal to about 17 inches. In one embodiment, the body **126** is configured to receive at least about 500 feet of 3 mm fiber optic cable. In another embodiment, the body **126** is configured to receive at least about 400

feet of 3 mm fiber optic cable. In another embodiment, the body **126** is configured to receive at least about 200 feet of 3 mm fiber optic cable. In another embodiment, the body **126** is configured to receive at least about 250 feet of dual-zip 3 mm fiber optic cable. In another embodiment, the body **126** is configured to receive at least about 200 feet of dual-zip 3 mm fiber optic cable. In another embodiment, the body **126** is configured to receive at least about 100 feet of dual-zip 3 mm fiber optic cable.

The body **126** of the hub **120** includes a first longitudinal end **132**, an oppositely disposed second longitudinal end **134**, a first longitudinal side **136** that extends between the first and second longitudinal ends **132**, **134** and an oppositely disposed second longitudinal side **138** that extends between the first and second longitudinal ends **132**, **134**. The first and second longitudinal ends **132**, **134** are generally arcuate in shape. In the depicted embodiment, the first and second longitudinal ends **132**, **134** are generally semi-circular in shape.

The hub **120** further includes a strain relief protrusion **140** that extends outwardly from the second surface **130** of the hub **120**. In the depicted embodiment, the strain relief protrusion **140** is generally cylindrical in shape. The strain relief protrusion **140** has an outer diameter that is less than a distance between the first and second longitudinal sides **136**, **138**.

The hub **120** defines a cable transition notch **142** disposed in the first longitudinal side **136** of the body **126**. The cable transition notch **142** extends inward into the body **126** from the first longitudinal end **132** to the strain relief protrusion **140**. In the depicted embodiment, the cable transition notch **142** angles inwardly from the first longitudinal end **132** of the body **126** to the strain relief protrusion **140**. The cable transition notch **142** is adapted to provide a location at which fiber optic cable coiled about the body **126** of the hub **120** can pass to the strain relief protrusion **140**.

The hub **120** further defines a central bore **144**. The central bore **144** extends through the first and second surfaces **128**, **130** and through the strain relief protrusion **140**.

The first flange **122** is engaged to the hub **120**. In the subject embodiment, the first flange **122** is fastened (e.g., screwed, bolted, riveted, welded, bonded, etc.) to the first surface **128** of the hub **120**. The first flange **122** is generally planar and oval in shape. The first flange **122** defines a bore **146** that is adapted for alignment with the central bore **144** of the hub **120** when the first flange **122** is engaged to the hub **120**.

The second flange **124** is engaged to the hub **120**. In the depicted embodiment, the second flange **124** is fastened (e.g., screwed, bolted, riveted, welded, bonded, etc.) to the second surface **130** of the hub **120**.

The second flange **124** includes a central opening **148** that extends through the second flange **124**. The central opening **148** is adapted to receive the strain relief protrusion **140** of the hub **120** when the second flange **124** is engaged to the hub **120** so that the strain relief protrusion **140** extends outwardly from the second flange **124** of the cable spool assembly **62**. In the depicted embodiment, the central opening **148** is oversized to allow the fiber optic cable which passes through the cable transition notch **142** to pass through the central opening **148**.

The second flange **124** includes an outer surface **150**. The outer surface **150** includes a cable management area **152** and a termination area **154** disposed adjacent to the cable management area **152**.

The cable management area **152** includes a plurality of fan-out mounting brackets **156**. The fan-out mounting brackets **156** are spaced apart to receive a fan-out **158** (shown in FIG. **8**), which separates optical fibers of a fiber optic cable, between the fan-out mounting brackets **156**. The fan-out mounting brackets **156** extend outwardly from the outer surface **150** of the second flange **124**. In the depicted embodiment, the fan-out mounting brackets **156** extend outwardly in a generally perpendicular direction. Each of the fan-out mounting brackets **156** includes at least one receptacle **160**. In the depicted embodiment, each of the fan-out mounting brackets **156** includes two receptacles **160**.

Referring now to FIGS. **8** and **15-18**, the fan-out **158** is retained in the fan-out mounting bracket **156** by a fan-out clip **162**. The fan-out clip **162** includes a cover plate **164** and a plurality of latches **166** that extend outwardly from the cover plate **164**.

In the depicted embodiment, the cover plate **164** is similar in shape to the outline of the fan-out **158**. The cover plate **164** includes a first end **168** and an oppositely disposed second end **170**. The second end **170** includes a width that is less than a width of the first end **168** so that the cover plate **164** tapers from the first end **168** to the second end **170**.

The latches **166** extend outwardly from the first end **168** of the cover plate **164** in a direction that is generally perpendicular to the cover plate **164**. Each of the latches **166** includes a base end **172** and a free end **174**. The base end **172** is engage to the cover plate **164**. The free end **174** includes a latch protrusion **176** that is adapted for receipt in the receptacle **160** of the fan-out mounting bracket **156**.

An alignment pin **178** extends outwardly from the second end **170** of the cover plate **164** of the fan-out clip **162**. In the depicted embodiment, the alignment pin **178** extends in a direction that is generally parallel to the latches **166**. The alignment pin **178** is sized to fit within a first alignment opening **180***a* in the fan-out **158**. In one embodiment, the outer surface **150** of the second flange **124** includes a protrusion that is adapted to fit with a second alignment opening **180***b* of the fan-out **158**.

With the fan-out **158** disposed between the fan-out mounting brackets **156**, the alignment pin **178** of the fan-out clip **162** is aligned with the first alignment opening **180***a* of the fan-out **158**. The fan-out clip **162** is pressed down toward the outer surface **150** of the second flange **124** until the latch protrusion **176** engages the receptacle **160** of the fan-out mounting bracket **156**.

In the depicted embodiment, the mounting brackets **156** are adapted to hold multiple fan-outs **158**. Each of the fan-out mounting brackets **156** includes one receptacle **160** per fan-out **158** that the fan-out mounting brackets **156** can hold. In the depicted embodiment, the fan-out mounting brackets **156** can hold two fan-outs **158**. So, in the depicted embodiment, each of the fan-out mounting brackets **156** defines two receptacles **160**. If only one fan-out **158** is disposed in the fan-out mounting brackets **156**, the fan-out clip **162** is pressed down until the latch protrusions **176** engage the receptacles **160** closest to the outer surface **150** of the second flange **124**. If two fan-outs **158** are disposed in the fan-out mounting brackets **156**, the fan-out clip **162** is pressed down until the latch protrusions **176** engage the receptacles **160** adjacent to the receptacles **160** closest to the outer surface **150** of the second flange **124**.

Referring now to FIGS. **7** and **8**, the cable management area **152** includes a plurality of bend radius protectors **182**. The bend radius protectors **182** are disposed on the outer surface **150** of the second flange **124**. The bend radius protectors **182** are adapted to prevent damage to the optical fibers that are routed from the fan-out **158** to the termination area **154**. In the depicted embodiment, each of the bend radius protectors **182** is arcuate in shape and includes a retention projection **184** that extends outwardly from a convex surface **186** of the bend radius protector **182**.

Referring now to FIGS. **7**, **19**, and **20**, the termination area **154** includes an adapter module **190** (e.g., a termination unit, etc.). The adapter module **190** is adapted to rotate in unison with the cable spool assembly **62** and to slide relative to the second flange **124**. The adapter module **190** is adapted to slide relative to the second flange **124** in a direction that is generally parallel to the second flange **124** between a retracted position (shown in FIG. **7**) and an extended position (shown in FIG. **20**). In the depicted embodiment, the adapter module **190** is adapted to slide in a direction that is generally parallel to the front-to-back direction F-B. The adapter module **190** includes a carrier **192** and a plurality of adapters **194** disposed in the carrier **192**.

In the depicted embodiment, the carrier **192** includes a first rail **196***a* and a second rail **196***b*. Each of the first and second rails **196***a*, **196***b* includes a first axial end **198** and a second axial end **200**. The carrier **192** further includes a cross-support **202** that extends between the first and second rails **196***a*, **196***b* at a location between the first and second axial ends **198**, **200**.

An adapter mounting bracket **204** is engaged with the first axial ends **198** of the first and second rails **196***a*, **196***b*. The adapter mounting bracket **204** defines a plurality of adapter openings **205** that is adapted to receive the plurality of adapters **194**. In the depicted embodiment, the adapter openings **205** are arranged in a line that is generally perpendicular to the direction of slide movement of the adapter module **190** so that the direction of slide movement of the adapter module **190** is generally perpendicular to the line of adapters **194** mounted in the adapter mounting bracket **204**.

In one embodiment, the adapter mounting bracket **204** is adapted to receive twenty-four adapters **194**. In another embodiment, the adapter mounting bracket **204** is adapted to receive twelve adapters **194**. In another embodiment, the adapter mounting bracket **204** is adapted to receive forty-eight adapters **194**.

The first and second rails **196***a*, **196***b* of the adapter module **190** are slidably engaged to the outer surface **150** of the second flange **124** by a plurality of guides **206**. The guides **206** extend outwardly from the outer surface **150** and define channels **208** in which the first and second rails **196***a*, **196***b* are slidably disposed.

The second flange **124** defines a plurality of mounting tabs **210** that extend outwardly from a perimeter of the outer surface **150**. The mounting tabs **210** are adapted to abut mounts **212** that extend outwardly from the first axial ends **198** of the first and second rails **196***a*, **196***b* when the adapter module **190** is in the retracted position. With the adapter module **190** in the retracted position, fasteners **214** (e.g., screws, bolts, rivets, etc.) disposed through the mounts **212** can be engaged to the mounting tabs **210** to retain the adapter module **190** in the retracted position. In one embodiment, the fasteners **214** are captive thumb screws.

With the fasteners **214** disengaged from the mounting tabs **210**, the adapter module **190** can be translated outwardly from the second flange **124** of the cable spool assembly **62** in a direction that is generally parallel to the front-to-back direction F-B to the extended position. In one embodiment, the adapter module **190** has a range of travel of at least two inches. In another embodiment, the adapter module **190** is adapted to slide a distance that provides access to inward facing ports of the adapters **194** when the tray assembly **14** is engaged to the chassis **12**. By providing access to the inward facing ports of the adapters **194**, connectorized ends of fiber optic cables that are plugged into the inward facing ports of the adapters **194** can be removed and cleaned while the tray assembly **14** is engaged to the chassis **12**.

In the extended position, a catch **216** abuts the cross-support **202** and prevents the adapter module **190** from moving farther outward from the second flange **124**. In the depicted embodiment, the catch **216** extends outwardly from a perimeter of the second flange **124**.

The adapter module **190** includes a plurality of resilient latches **220** that is engaged with the first axial ends **198** of the first and second rails **196***a*, **196***b*. The resilient latches **220** are disposed between the first and second rails **196***a*, **196***b* and the mounting tabs **212**. When the adapter module **190** is in the extended position (shown in FIG. **20**), the resilient latches are adapted to engage the mounting tabs **212** to prevent the adapter module **190** from being moved inwardly toward the second flange **124**. The engagement of the resilient latches **220** and the mounting tabs **212** prevents the adapter module **190** from moving toward the retracted position as connectorized ends of fiber optic cables are inserted into outward facing ports of the adapters **194**.

Referring now to FIGS. **8**, **21**, and **22**, the installation of the cable spool assembly **62** to the tray **60** will be described. The cable spool assembly **62** is rotatably engaged to the tray **60** by a bushing **222**. In the depicted embodiment, the bushing **222** provides the engagement between the cable spool assembly **62** and the base panel **64** of the tray **60**.

The bushing **222** is generally cylindrical in shape. The bushing **222** includes a first axial end **224** and a second axial end **226**. The first axial end **224** of the bushing **222** includes an end surface **228**. The end surface **228** is adapted for abutment with the base panel **64** of the tray **60**. In one embodiment, the end surface **228** defines a hole **229** that extends through the end surface **228**. The hole **229** is adapted to receive a fastener **230** (e.g., screw, bolt, etc.) that is used to secure or anchor the bushing **222** to the tray **60**. The end surface **228** includes a peg **231** that extends outwardly from the end surface **228**. The peg **231** is adapted for receipt in an opening in the base panel **64** of the tray **60**. The peg **231** is adapted to prevent the bushing **222** from rotating relative to the tray **60**.

The first axial end **224** has an outer diameter that is less than the inner diameter of the central bore **144** of the hub **120** so that the first axial end **224** of the bushing **222** can be inserted into the central bore **144** of the hub **120**. The second axial end **226** has an outer diameter that is greater than the inner diameter of the central bore **144** of the hub **120**. With the first axial end **224** of the bushing **222** disposed in the central bore **144** of the hub **120** and the fastener securing the end surface **228** to the base panel **64**, the second axial end **226** abuts an end surface of the strain relief protrusion **140** of the hub **120** and captures the cable spool assembly **62** between the base panel **64** of the tray **60** and the second axial end **226** of the bushing **222**. As the bushing **222** is generally cylindrical in shape, the cable spool assembly **62** can rotate about the bushing **222**. In one embodiment, the bushing **222** is keyed to the base panel **64** so that the bushing **222** is stationary relative to the tray **60**.

Referring now to FIGS. **7** and **14**, the routing of a fiber optic cable **232** in the tray assembly **14** will be described. The fiber optic cable **232** includes a first end and a second end. The fiber optic cable **232** is coiled about the body **126** of the hub **120** of the cable spool assembly **62** between the first and second flanges **122**, **124**.

The first end of the fiber optic cable **232** is disposed closest to the hub **120**. A portion of the first end passes through the cable transition notch **142** in the hub **120** and through the central opening **148** of the second flange **124**. The portion of the first end of the fiber optic cable **232** is coiled at least once around the strain relief protrusion **140** of the hub **120**. In one embodiment, the first end is anchored to the second flange

124 (e.g., with a cable tie) after being wrapped at least once around the strain relief protrusion **140**. The first end is routed from the strain relief protrusion **140** to the fan-out **158**. Optical fibers **233** are separated from the fiber optic cable **232** at the fan-out **158**. Each of the optical fibers **233** includes a connectorized end. The connectorized ends of the optical fibers **233** are routed to the adapters **194** and engaged to inward facing ports of the adapters **194**.

In one embodiment, the second end of the fiber optic cable **232** has a multi-fiber connector **353***c*. The second end can be routed outside of the tray assembly **14** at a location adjacent to the first end portion **66** of the base panel **64** of the tray **60** or at an opposite location adjacent to the second end portion **68** of the base panel **64** of the tray **60**. The second end is routed through the passage **98** of any one of the bend radius protectors **90** disposed on the tray **60**.

Referring now to FIG. **3**, the insertion of the tray assembly **14** into the chassis **12** will be described. The tray assembly **14** is adapted for insertion into the chassis **12** through either the first opening **52** or the second opening **54** of the chassis **12**.

To insert the tray assembly **14** into the first opening **52** of the chassis **12**, the second axial ends **78** of the first and second resilient latches **74***a*, **74***b* of the tray assembly **14** are flexed inwardly. The second end portion **68** of the base panel **64** of the tray **60** is inserted through the first opening **52** of the chassis **12**. The tray assembly **14** is then pushed into the interior region **50** of the chassis **12** until the first and second protrusions **80**, **82** on each of the first and second resilient latches **74***a*, **74***b* are engaged in the holes **48** of the first and second sidewalls **18**, **20** of the chassis **12**. In the depicted embodiment, the first and second protrusions **80**, **82** on each of the first and second resilient latches **74***a*, **74***b* provide four-point contact between the tray assembly **14** and the chassis **12**.

The first protrusions **80** of the first and second resilient latches **74***a*, **74***b* prevent the tray assembly **14** from being removed through the first opening **52** of the chassis **12** by abutting the holes **48** in the chassis **12** but allow the tray assembly to be removed through the second opening **54** of the chassis **12**. The second protrusions **82** of the first and second resilient latches **74***a*, **74***b* prevent the tray assembly **14** from being removed through the second opening **54** of the chassis **12** but allow the tray assembly **14** to be removed through the first opening **52** of the chassis **12**.

To remove the tray assembly **14** from the first opening **52** of the chassis **12**, the first axial end portions **76** of the resilient latches **74***a*, **74***b* of the tray assembly **14** are flexed inwardly until the lips **84** of the first protrusions **80** are no longer disposed in the holes **48** of the chassis **12**. With the first axial end portions **76** of the resilient latches **74***a*, **74***b* of the tray assembly **14** flexed inwardly, the tray assembly **14** is pulled out of the first opening **52** of the chassis **12**. As the tray assembly **14** is pulled out of first opening **52**, the angled surfaces **86** of the second protrusions **82** contact an edge of the hole **48** that causes the second axial end portions **78** of the resilient latches **74***a*, **74***b* to flex inwardly.

To insert the tray assembly **14** into the second opening **54** (shown in FIG. **4**) of the chassis **12**, the first axial end portions **76** of the first and second resilient latches **74***a*, **74***b* of the tray assembly **14** are flexed inwardly. The first end portion **66** of the base panel **64** of the tray **60** is inserted through the second opening **54** of the chassis **12**. The tray assembly **14** is pushed into the interior region **50** of the chassis **12** until the first and second protrusion of the first and second resilient latches are engaged in the holes **48** of the first and second sidewalls **18**, **20** of the chassis **12**.

To remove the tray assembly **14** from the second opening **54** of the chassis **12**, the second axial end portions **78** of the resilient latches **74***a*, **74***b* of the tray assembly **14** are flexed inwardly until the lips **84** of the second protrusions **82** are no longer disposed in the holes **48** of the chassis **12**. With the second axial end portions **78** of the resilient latches **74***a*, **74***b* of the tray assembly **14** flexed inwardly, the tray assembly **14** is pulled out of the second opening **54** of the chassis **12**. As the tray assembly **14** is pulled out of first opening **52**, the angled surfaces **86** of the first protrusions **80** contact an edge of the hole **48** that causes the first axial end portions **76** of the resilient latches **74***a*, **74***b* to flex inwardly.

With the tray assembly **14** installed in the chassis **12**, the fiber optic cable **232** can be deployed by pulling the second end of the fiber optic cable **232** through one of the first and second openings **52**, **54** of the chassis **12**. As the fiber optic cable **232** is pulled, the cable spool assembly **62** rotates about the bushing **222**. As the cable spool assembly **62** rotates, the adapter module **190** rotates in unison. Since the adapter module **190** rotates in unison with the cable spool assembly **62**, the connectorized ends of the first end of the fiber optic cable **232** can be engaged in the inwardly facing ports of the adapters **194**. The second end of the fiber optic cable **232** is pulled until a desired length of fiber optic cable **232** has been deployed.

Referring now to FIGS. **23** and **24**, a locking mechanism **240** is shown. The locking mechanism **240** is adapted to prevent the cable spool assembly **62** from rotating relative to the tray **60**. In one embodiment, the locking mechanism **240** provides an electrical connection between the tray **60** and the cable spool assembly **62** so as to serve as a ground. A separate ground is provided between the tray **60** and the chassis **12**.

The locking mechanism **240** includes an arm **242** that pivots about a location on the tray **60**. In the depicted embodiment, the arm **242** pivots about a location disposed at the second end portion **68** of the base panel **64** of the tray **60**.

When a desired length of fiber optic cable **232** has been deployed, the arm **242** is pivoted toward the second flange **124** of the cable spool assembly **62**. The second flange **124** includes a lock mount **244** (best shown in FIG. **13**) that extends outwardly from the outer surface **150** of the second flange **124** and is disposed at an outer perimeter of the second flange **124**. The arm **242** of the locking mechanism **240** is pivoted until a fastener **246** (e.g., thumbscrew) that extends through the arm **242** is aligned with an opening **248** in the lock mount **244**. The fastener **246** is then engaged with the opening **248** to secure the cable spool assembly **62** in position relative to the tray **60**.

Referring now to FIGS. **25-27**, an alternate embodiment of a telecommunications assembly **300** is shown. The telecommunications assembly **300** includes a chassis **302** and multiple tray assemblies **14**.

The chassis **302** is similar to the chassis **12** previously described except that the chassis **302** is adapted to receive multiple tray assemblies **14**. Therefore, it will be understood that the features described with regard to the chassis **12** may be incorporated in the chassis **302**.

The chassis **302** includes a base wall **304**, a first sidewall **306** that extends outwardly from the base wall **304**, an oppositely disposed second sidewall **308** and a cover **310**. The base wall **304**, the first and second sidewalls **306**, **308** and the cover **310** cooperatively define an interior region **312** that is adapted to receive the plurality of tray assemblies **14**. The base wall **304**, the first and second sidewalls **306**, **308** and the cover **310** further define a first opening **314** to the interior region **312** and an oppositely disposed second opening **316** to the interior region **312**.

The first and second sidewalls **306**, **308** of the chassis **302** include a plurality of first tray guides **318** (best shown in FIG. **27**). The first tray guides **318** extend into the interior region **312** of the chassis **302**. The first tray guides **318** are adapted to abut the base panel **64** of the tray assembly **14** and to support the tray assembly **14** in the interior region **312** of the chassis **302**.

The first and second sidewalls **306**, **308** of the chassis **302** further include a plurality of second tray guides **319**. The second tray guides **319** define a channel through which the first and second side portions **70**, **72** of the base panel **64** of the tray assembly **14** pass.

The tray assemblies **14** can be installed into the chassis **302** in a manner that is similar to the installation of the tray assembly **14** in the chassis **12**, which was previously described. In the depicted embodiment, the tray assemblies **14** are disposed in a vertical orientation in the interior region **312** of the chassis **302**.

In one embodiment, the telecommunications assembly **300** includes a front cover plate **320**. The front cover plate **320** is engaged to the base wall **304** by a hinge **322**. In the depicted embodiment, the hinge **322** is integral with a first end **323** of the base wall **304**. The hinge **322** includes a first arm **324** having a first curved portion **326** that opens in a first direction and a second arm **327** having a second curved portion **328** that opens in an opposite second direction. The first and second curved portions **326**, **328** are adapted to capture a bar **330** of the front cover plate **320** that is disposed between an opening **332** through the front cover plate **320** and an adjacent edge **334** of the front cover plate **320**. In the depicted embodiment, the front cover plate **320** is adapted to pivot between an open position and a closed position (shown in FIG. **23**).

Referring now to FIGS. **28** and **29**, a cable assembly **350** is shown. The cable assembly **350** includes the tray assembly **14** mounted to a cable spool **352**. The cable assembly **350** is adapted to provide a length of fiber optic cable **353** that is greater than the length that can fit around the cable spool assembly **62** of the tray assembly **14**. In the depicted embodiment, the cable spool **352** can hold a length of the fiber optic cable **353** that is greater than or equal to 500 feet of 3 mm fiber optic cable. In another embodiment, the cable spool **352** can hold a length of the fiber optic cable **353** that is greater than or equal to 1,000 feet of 3 mm fiber optic cable.

The cable spool **352**, including a drum **354** and/or flanges **356**, **358**, can be manufactured of a plastic material, a paper board material (e.g., cardboard or like material) or a recycled material. In one embodiment, the cable spool **352** is recyclable or disposable after use.

The cable spool **352** includes the drum **354**, the first flange **356**, and the second flange **358**. The drum **354** is adapted to receive the fiber optic cable **353** coiled around the drum **354**. The drum **354** includes a first axial end **360** and an oppositely disposed second axial end **362**. The first flange **356** is engaged to the first axial end **360** of the drum **354**. The second flange **358** is engaged to the second axial end **362** of the drum **354**.

The tray assembly **14** is mounted to an outer surface **364** of the first flange **356** of the cable spool **352**. In one embodiment, the tray assembly **14** is tied down to the first flange **356** so that the base panel **64** of the tray **60** abuts the outer surface **364** of the first flange **356**.

To assemble the cable assembly **350**, a first end of a length of the fiber optic cable **353** is coiled around the cable spool assembly **62** of the tray assembly **14**. The fiber optic cable **353** is routed from the cable spool assembly **62** of the tray assembly **14** through one of the bend radius protectors **90** and through a notch **366** in the first flange **356** and around the drum **354**. The notch **366** in the first flange **356** extends inwardly from an outer edge of the first flange **356** to the drum **354**. The notch **366** allows the fiber optic cable **353** to pass to the drum **354** of the cable spool **352** from an off-drum location.

To deploy the fiber optic cable **353** from the cable assembly **350**, the cable assembly **350** is positioned in front of or behind a telecommunications mount (e.g., rack **15**, frame, etc.), which is adapted to receive the telecommunications assembly **10**, **300**, depending on whether the telecommunications assembly **10**, **300** is to installed from the front or back of the telecommunications mount. The fiber optic cable **353** is deployed from the cable spool **352** of the cable assembly **350**. In one embodiment, the cable spool **352** with tray assembly **14** attached thereto is mounted to a spindle/rotation structure **370** (see FIG. **35**). The fiber optic cable **353** is pulled from the cable spool **352**, which causes rotation of the cable spool **352** and concurrent rotation of the tray assembly **14** carried by the cable spool **352**.

After the fiber optic cable **353** is paid out from the cable spool **352**, the cable spool assembly **62** of the tray assembly **14** is rotated relative to the tray **60** and the cable spool **352** to pay off additional fiber optic cable **353** disposed about the cable spool assembly **62**. With the fiber optic cable **353** paid out or partially paid out, the multi-fiber connector **353***c* of the second end of the fiber optic cable **353** is plugged into a component.

The cable spool **352** is then removed from the tray assembly **14**. In one embodiment, the cable spool **352** is discarded (e.g., disposed of or recycled). The tray assembly **14** is moved toward the rack **15** (shown in FIG. **1**). As the tray assembly **14** is moved toward the rack **15**, the cable spool assembly **62** rotates relative to the tray **60** to provide additional length of the fiber optic cable **353**. The tray assembly **14** is then installed into the chassis **12**, **302**, which, in one embodiment, is pre-mounted in the rack **15**. If it is desired to route the fiber optic cable **353** out the front of the chassis **12** or the front of the rack **15**, the tray assembly **14** is inserted into the rack **15** from the front. If it is desired to route the fiber optic cable **353** out the back of the chassis **12** or the back of the rack **15**, the tray assembly **14** is inserted into the rack **15** from the back. With the tray assembly **14** engaged to the chassis **12**, the telecommunications assembly **10**, **300** is installed in the telecommunications mount.

The cable assembly **350** is depicted at FIGS. **28** and **29** including the cable spool **352**. In other embodiments, other spool assemblies may be used. For example, the spool assemblies disclosed at U.S. provisional patent application Ser. No. 61/370,070, filed Aug. 2, 2010, hereby incorporated by reference in its entirety, can be included in certain embodiments. In still other embodiments, a cable spool **352'**, described below, can be included.

Turning now to FIGS. **30-34**, a tray assembly **14'** of the present disclosure is illustrated. The tray assembly **14'** is similar to the tray assembly **14**, disclosed above. The tray assembly **14'** includes a tray **60'** (e.g., a shelf, a drawer, etc.) and a cable spool assembly **62'** rotatably mounted to the tray **60'**. The tray **60'** is similar to the tray **60**, and the cable spool assembly **62'** is similar to the cable spool assembly **62**. Similar to the tray assembly **14**, the tray assembly **14'** is adapted for insertion and removal from the chassis **12** and **302** as a unit, without requiring the cable spool assembly **62'** to be detached from the tray **60'**.

The tray **60'** includes a base panel **64'** having a first end portion **66'** (e.g., a front end portion), an oppositely disposed second end portion **68'** (e.g., a back end portion), a first side portion **70'** that extends at least partially between the first and second end portions **66'**, **68'** and an oppositely disposed sec-

ond side portion **72'** that extends at least partially between the first and second end portions **66'**, **68'**. In the depicted embodiment, the first and second side portions **70'**, **72'** extend outwardly from the base panel **64'** in a generally perpendicular direction.

Referring now to FIG. **31**, the first end portion **66'** of the tray **60'** defines a recess **110'**. A tab **112'** extends from the base panel **64'** into the recess **110'** and separates the recess **110'** into a first recess **110***a*' and a second recess **110***b*'. The tab **112'** is generally coplanar with the base panel **64'**. The tab **112'** includes a free end **114'** that extends in a direction that is generally perpendicular to the base panel **64'**. In the depicted embodiment, the first and second recesses **110***a*', **110***b*' are generally equal in size.

Similar to the cable spool assembly **62**, the cable spool assembly **62'** is adapted to rotate relative to the tray **60'**. In the depicted embodiment, the cable spool assembly **62'** is rotatably engaged to the base panel **64'** of the tray **60'**. The cable spool assembly **62'** includes a stored position (shown in FIGS. **30-31**). In one embodiment, the cable spool assembly **62'** can be releasably secured in the stored position. The cable spool assembly **62'** is adapted to be rotated from the stored position to deploy fiber optic cable wrapped about the cable spool assembly **62'**.

The cable spool assembly **62'** can include the hub **120**, a first flange **122'** engaged to the hub **120** and a second flange **124'** engaged to the hub **120** opposite the first flange **122'**. In the subject embodiment, the first flange **122'** is fastened (e.g., screwed, bolted, riveted, welded, bonded, etc.) to the first surface **128** of the hub **120**. The first flange **122'** is generally planar and oval in shape. In the depicted embodiment, the second flange **124'** is fastened (e.g., screwed, bolted, riveted, welded, bonded, etc.) to the second surface **130** of the hub **120**.

The second flange **124'** includes a central opening **148'** that extends through the second flange **124'**. The central opening **148'** is adapted to receive the strain relief protrusion **140** of the hub **120** when the second flange **124'** is engaged to the hub **120** so that the strain relief protrusion **140** extends outwardly from the second flange **124'** of the cable spool assembly **62'**. In the depicted embodiment, the central opening **148'** is oversized to allow the fiber optic cable which passes through the cable transition notch **142** to pass through the central opening **148'**.

The second flange **124'** includes an outer surface **150'**. The outer surface **150'** includes a cable management area **152'** and a termination area **154'** disposed adjacent to the cable management area **152'**.

The cable management area **152'** includes a plurality of fan-out mounting features **156'**. The fan-out mounting features **156'** are spaced apart to receive one or more fan-outs **158'**, similar to the fan-out **158**, which separates optical fibers of a fiber optic cable. As depicted, the fan-out mounting features **156'** extend outwardly from the outer surface **150'** of the second flange **124'**. In the depicted embodiment, the fan-out mounting features **156'** extend outwardly in a generally perpendicular direction. As depicted, the fan-out mounting features **156'** can include a post and a fastening arrangement (e.g., a stud and a nut). Referring now to FIG. **31**, the fan-out **158'** is retained by the fan-out mounting feature **156'** and a nut. The fan-out **158'** includes at least one mounting hole. As depicted, the fan-out **158'** includes two mounting holes with one mounting hole mounted over the post and the other mounting hole mounted over the stud of the mounting feature **156'**.

Referring now to FIGS. **30-34**, the termination area **154'** includes an adapter module **190'** (e.g., a termination unit, etc.). The adapter module **190'** is adapted to rotate in unison with the cable spool assembly **62'** and to slide relative to the second flange **124'**. The adapter module **190'** is adapted to slide relative to the second flange **124'** in a direction that is generally parallel to the second flange **124'** between a retracted position (shown in FIGS. **30-32**) and an extended position (similar to that shown in FIG. **20**). In the depicted embodiment, the adapter module **190'** is adapted to slide in a direction that is generally parallel to a front-to-back direction F-B'. In certain embodiments, the cable spool assembly **62'** will not be able to rotate 360 degrees (i.e., rotate through a full revolution) with the adapter module **190'** in the extended position. With the adapter module **190'** in the extended position, the adapter module **190'**, and particularly corners of the adapter module **190'**, may interfere with the first and second side portions **70'**, **72'** of the base panel **64'** and/or interfere with the chassis **12**.

As illustrated at FIGS. **32-34**, the adapter module **190'** includes a carrier **192'** and a plurality of adapters **194** disposed in the carrier **192'**. In the depicted embodiment, the carrier **192'** includes a first rail **196***a*' and a second rail **196***b*'. Each of the first and second rails **196***a*', **196***b*' includes a first axial end **198'** and a second axial end **200'**. The carrier **192'** further includes a cross-support **202'** that extends between the first and second rails **196***a*', **196***b*' at a location between the first and second axial ends **198'**, **200'**.

The first and second rails **196***a*', **196***b*' of the carrier **192'** each include a slot **197** that extends in the front-to-back direction F-B'. Fasteners **199** attach the adapter module **190'** via the slots **197** to the cable spool assembly **62'**. As depicted, the fasteners **199** attach the carrier **192'** to the second flange **124'** at fastening holes in the second flange **124'**. The fasteners **199** allow the adapter module **190'** to travel between the retracted position and the extended position with the fasteners **199** loosened and can provide stops at the retracted position and the extended position. The adapter module **190'** may be secured at the retracted position, the extended position, or an intermediate position by tightening the fasteners **199**.

As illustrated at FIG. **33**, an attachment location **201** can be included at the second axial end **200'** of either or both of the first and second rails **196***a*', **196***b*' of the carrier **192'**. As depicted at FIGS. **30** and **33**, the attachment location **201** is a stud at the second axial end **200'** of the second rail **196***b*'. The attachment location **201** is attached to a first end **203***a* of a tether **203**. A second end **203***b* of the tether **203** is attached to the second flange **124'** by one of the fasteners **199**. As depicted, the second end **203***b* is attached by one of the fasteners **199** closest to an adapter mounting bracket **204'** of the carrier **192'**.

The tether **203** provides electrical grounding to the adapter module **190'** from the cable spool assembly **62'**. The cable spool assembly **62'** can be grounded to the tray **60'** by the locking mechanism **240** in a manner similar to the grounding of the cable spool assembly **62** to the tray **60**, described above. A separate ground can be provided between the tray **60'** and the chassis **12**, the chassis **12** and the rack **15**, and/or the tray **60'** and the rack **15**. Thus, the adapter module **190'**, the cable spool assembly **62'**, the tray **60'**, the chassis **12**, and the rack **15** may all be electrically connected.

The adapter mounting bracket **204'** is engaged with the first axial ends **198'** of the first and second rails **196***a*', **196***b*'. The adapter mounting bracket **204'** defines a plurality of adapter openings **205'** that is adapted to receive the plurality of adapters **194**. In the depicted embodiment, the adapter openings **205'** are arranged in a line that is generally perpendicular to the direction of slide movement of the adapter module **190'** so that the direction of slide movement of the adapter module

190' is generally perpendicular to the line of adapters 194 mounted in the adapter mounting bracket 204'.

In one embodiment, the adapter mounting bracket 204' is adapted to receive twenty-four adapters 194. In another embodiment, the adapter mounting bracket 204' is adapted to receive twelve adapters 194. In another embodiment, the adapter mounting bracket 204' is adapted to receive forty-eight adapters 194.

The second flange 124' defines a plurality of mounting tabs 210' (see FIG. 30) that extend outwardly from a perimeter of the outer surface 150'. The mounting tabs 210' are adapted to abut mounts 212' that extend outwardly from the first axial ends 198' of the first and second rails 196*a*', 196*b*' when the adapter module 190' is in the retracted position. With the adapter module 190' in the retracted position, fasteners 214' (e.g., screws, bolts, rivets, thumb screws, etc.) disposed through the mounts 212' can be engaged to the mounting tabs 210' to retain the adapter module 190' in the retracted position. In the depicted embodiment, the fasteners 214' are captive thumb screws.

With the fasteners 214' disengaged from the mounting tabs 210', the adapter module 190' can be translated outwardly from the second flange 124' of the cable spool assembly 62' in a direction that is generally parallel to the front-to-back direction F-B' to the extended position. In one embodiment, the adapter module 190' has a range of travel of at least two inches. In another embodiment, the adapter module 190' is adapted to slide a distance that provides access to inward facing ports of the adapters 194 when the tray assembly 14' is engaged to the chassis 12. By providing access to the inward facing ports of the adapters 194, connectorized ends of fiber optic cables that are plugged into the inward facing ports of the adapters 194 can be removed and cleaned while the tray assembly 14' is engaged to the chassis 12.

In the extended position, a catch 216' abuts the cross-support 202' and prevents the adapter module 190' from moving farther outward from the second flange 124'. As depicted, the catch 216' extends outwardly from a perimeter of the second flange 124'.

As depicted at FIGS. 33 and 34, guiding tabs 207 are provided on the adapter module 190' to facilitate the rotation of the cable spool assembly 62' within and/or about the chassis 12. In particular, the depicted embodiment includes a pair of the guiding tabs 207 at opposite ends of the adapter mounting bracket 204'. The guiding tabs 207 are angled downwardly and positioned adjacent corners 209 of the cable spool assembly 62'. As the cable spool assembly 62' rotates within the chassis 12, the guiding tabs 207 prevent or reduce the potential of the corners 209 of the cable spool assembly 62' getting snagged and/or caught on various features, including the openings 52, 54, of the chassis 12. The guiding tabs 207 may be functional in both rotational directions of the cable spool assembly 62'.

As depicted at FIGS. 30 and 31, a cover 250 can be provided over the cable management area 152'. The cover 250 can cover or partially cover the optical fibers 233, the fan-outs 158', and other components and features in the cable management area 152'. By covering at least a portion of the cable management area 152', the optical fibers 233 are prevented or held back from becoming entangled as the tray assembly 14' is rotated within the chassis 12, 302 or inserted into the chassis 12, 302. By covering at least a portion of the cable management area 152', the fan-outs 158' and other components and features in the cable management area 152' are prevented from bumping against features and components of the chassis 12, 302 as the tray assembly 14' is rotated within the chassis 12, 302 or inserted into the chassis 12, 302. The cover 250 can serve as a guide to the optical fibers 233 and other optical fiber cables within and near the cable management area 152'. The optical fibers 233 and other optical fiber cables within and near the cable management area 152' can be sandwiched between the cover 250 and the outer surface 150' of the second flange 124'. An edge 266 of the cover 250 may be spaced from the adapter module 190' to allow connectors 252 of fiber optic cables 254 to be inserted and withdrawn from the adapter module 190' without removing the cover 250. The cover 250 and the adapter module 190' may effectively keep uncovered portions 256 of the fiber optic cables 254 in position and prevent their tangling.

The cover 250 can include a clearance relief 258 (e.g., a hole, a recess, a slot) around or near the hub 120. The cover 250 can include a clearance relief 260 (e.g., a hole, a recess, a slot) around or near the fan-outs 158'. The cover 250 can include a plurality of fastener holes 262 for attaching the cover 250 to the second flange 124'. The second flange 124' can include standoffs 264 for attaching the cover 250 to the second flange 124'. The standoffs 264 can space the cover 250 from the second flange 124'. The standoffs 264 can prevent the cover 250 from clamping the optical fibers 233, 254, the fan-outs 158', and other components and features in the cable management area 152' against the outer surface 150' of the second flange 124'. The standoffs 264 can be threaded standoffs. Fasteners (not shown) can be inserted through the fasteners holes 262 and into the standoffs 264 and thereby attach the cover 250 to the second flange 124'.

As depicted at FIGS. 30-32, a panel 268 can be provided on the adapter module 190'. FIGS. 30 and 31 show the panel 268 assembled and broken away to reveal the fiber optic cable 232 within the cable spool assembly 62'. FIG. 32 shows the panel 268 separated from the adapter module 190'. The panel 268 can serve as a place to affix labels 270 that relate to the adapter module 190'. For example, indices that relate to or number individual fiber optic adapters 194 can be appropriately positioned on the panel 268. The labels 270 can be pre-applied to or stamped on the panel 268 at a factory and/or can be applied by a service technician (e.g. as stickers). As depicted, the panel 268 is positioned below the fiber optic adapters 194 and covers a front portion of the cable spool assembly 62' and thereby covers a front portion of the fiber optic cable 232 that is within the cable spool assembly 62'. The panel 268 can thereby give the adapter module 190' and the tray assembly 14' a cleaner appearance by hiding or obscuring the fiber optic cable 232. The panel 268 can also protect the fiber optic cable 232.

As depicted, the panel 268 includes a first tab 272 at a first end portion 274 and a second tab 276 at a second end portion 278. Each of the tabs 272, 276 includes a fastening feature 280 (e.g., a hole). The adapter module 190' includes a first tab 282 with a fastening feature 284 (e.g., a hole) and also includes a second tab 286 with a fastening feature 288 (e.g., a hole). In the depicted embodiment, a push-in fastener 290 is mounted in each of the holes 280 of the tabs 272, 276. The panel 268 can be removably mounted to the adapter module 190' by inserting the push-in fasteners 290 of each of the tabs 272, 276 into their corresponding holes 284, 288. The push-in fasteners 290 may snap in and snap out of their corresponding holes 284, 288. The push-in fasteners 290 may be retained by the hole 280.

Referring now to FIGS. 35-37, a cable assembly 350' is shown. The cable assembly 350' includes the tray assembly 14, 14', or 14" mounted to a first cable spool 352_1'. The first cable spool 352_1' may be mounted to a second cable spool 352_2'. Additional cable spools 352' can be added in like manner, as needed. As with the similar cable assembly 350,

described above, the cable assembly **350'** is adapted to provide a length of fiber optic cable **353'** that is greater than the length that can fit around the cable spool assembly **62**, **62'** of the tray assembly **14**, **14'**, **14"**. In the depicted embodiment, the cable spool **352'** can hold a length of the fiber optic cable **353'** that is generally equal to the lengths or range of lengths held by the cable spool **352**, described above.

The cable spool **352'** can be manufactured of materials similar to the materials used in the cable spool **352**, described above. The cable spool **352'** includes a drum **354'**, a first flange **356'**, and a second flange **358'**. The flanges **356'**, **358'** can be made of cardboard. The drum **354'**, the first flange **356'**, and the second flange **358'** are generally respectively similar in form and function to the drum **354**, the first flange **356**, and the second flange **358**, described above. The second flange **358'** of the first cable spool $\mathbf{352}_1$' may attach to the first flange **356'** of the second cable spool $\mathbf{352}_2$'.

The tray assembly **14**, **14'**, **14"** and the first cable spool $\mathbf{352}_1$' of the cable assembly **350'** are assembled similarly to the tray assembly **14** and the cable spool **352** of the cable assembly **350**, described above.

The flanges **356'**, **358'** each include a notch **366'** similar to the notch **366**, described above. The notch **366'** allows the fiber optic cable **353'** to pass from the drum $\mathbf{354}_1$' to the drum $\mathbf{354}_2$'. As the fiber optic cable **353'** passes from the drum $\mathbf{354}_1$' to the drum $\mathbf{354}_2$', a transition in cable radius is made. In particular, adjacent the transition, the cable radius on the drum $\mathbf{354}_1$' is at or near a large radius or a maximum radius, and the cable radius on the drum $\mathbf{354}_2$' is at or near a small radius or a minimum radius. Guiding features **371** of the notch **366'** keep the transition snag-free.

To deploy the fiber optic cable **353'** from the cable assembly **350'**, the cable assembly **350'** can be positioned relative to the telecommunications mount similar to the positioning of the cable assembly **350**, described above. The fiber optic cable **353'** is first paid out from the second cable spool $\mathbf{352}_2$' (or the last cable spool **352'**). The fiber optic cable **353'** is pulled from the cable spool $\mathbf{352}_2$', which causes rotation of the cable assembly **350'**, including the tray assembly **14**, **14'**, **14"**, carried by the cable spool $\mathbf{352}_1$'. When the second cable spool $\mathbf{352}_2$' is empty of cable **353'**, the cable **353'** corresponding to the transition is paid out, over/through the guiding features **371**, followed by the cable **353'** wrapped about the first cable spool $\mathbf{352}_1$'. The details of paying out the cable **353'** from the first cable spool $\mathbf{352}_1$' and the cable spool assembly **62**, **62'** are similar to the paying out of cable **353** from the cable spool **352** and the cable spool assembly **62**, described above.

To facilitate unwinding and winding of the cable **353'**, the spindle/rotation structure **370** may be employed (see FIG. **35**). The spindle structure **370** includes a base **372** and a rotation mount **374**. As depicted, the rotation mount **374** is a shaft. The cable assembly **350'** preferably includes a bushing or bearing **376** adapted to rotatably mount over the shaft **374**. As depicted, the bearing **376** is positioned on the second flange **358'**. As depicted, the spindle structure **370** is positioned opposite the tray assembly **14**, **14'**, **14"** about the cable assembly **350'**. In other embodiments, the spindle structure **370** is positioned adjacent the tray assembly **14**, **14'**, **14"**. The rotation mount **374** can mount to the bushing **222** of the tray assembly **14**, **14'**, **14"** (e.g., within an inside diameter of the bushing **222**, as shown at FIG. **22**). To reduce rotational friction, anti-friction features **378** can be included on the second flange **358'**. The anti-friction features **378** may be made from Teflon® or other suitable material with a sufficiently low coefficient of friction. As depicted, the anti-friction features **378** may ride/glide on the base **372**. The anti-friction features **378** may provide stability to the cable assembly **350'**. The anti-friction features **378** may act as thrust bushings. Other thrust bushings (e.g. flange type) can also or alternatively be used.

The spindle/rotation structure **370** may be set on a floor, a cabinet, or other suitable structure when unwinding or winding the cable **353'** from the cable spool **352'**. The spindle/rotation structure **370** may be reused.

The cable spools **352'** are removed from the tray assembly **14**, **14'**, **14"** after the cable **353'** has been removed from them. The cable spools **352'** and the tray assembly **14**, **14'**, **14"** are respectively disposed of and installed similar to the cable spool **352** and the tray assembly **14**, discussed above.

The cable assembly **350'** provides advantages in stocking, shipping, storing, and deploying the fiber optic cable **353'**. In particular, the cable assembly **350'** can be factory pre-built and stocked in several discrete configurations of varying length. The pre-building can include applying terminations **353***c* (e.g., connectors) to the fiber optic cable **353'**. Each of the pre-built cable assemblies **350'** can be deployed to a range of installations with a range of length requirements for the fiber optic cable **353'**. In general, the minimum cable length installation that the cable assembly **350'** could service would include a deployed cable length about equal to the length of the cable **353'** initially wound on the cable spool(s) **352'**. In general, the maximum cable length installation that the cable assembly **350'** could service would include a deployed cable length about equal to the length of the cable **353'** initially wound on the cable spool(s) **352'** plus the length of the cable **353'** initially wound on the cable spool assembly **62**, **62'**. Installation lengths between the minimum and the maximum cable length installation could be serviced without applying the fiber optic terminations **353***c* in the field. As a range of cable installation lengths can be serviced by a single cable assembly **350'** part number, the cable assembly **350'** can be factory pre-built. A few discrete cable assemblies **350'** of different deployed cable length ranges can therefor service a wide variety of installations.

The cable assembly **350'** allows post-installation flexibility. In particular, if a telecommunications component needs to be moved or the deployed cable **353'** of the cable assembly **350'** needs to be connected at a substantially different location, within the range of the cable **353'** initially wound on the cable spool assembly **62**, **62'**, the fiber optic cable **353'** can be taken in or paid out from the cable spool assembly **62**, **62'**.

A discrete length of the cable **353'** is stored and deployed from the cable spool(s) **352'**. This discrete length can be roughly matched to a given installation. Preferably, the discrete length of the cable **353'** from the cable spool(s) **352'** is somewhat shorter than the total length of deployed cable **353'** required at the given installation. A discrete length of the cable **353'** is stored on the cable spool assembly **62**, **62'**. However, a variable length of this cable **353'** can be deployed to exactly match (i.e., fine tune) the total length of the deployed cable **353'** to the requirements of the given installation.

The cable assembly **350'** is depicted at FIGS. **35-37** including the cable spool **352'**. In other embodiments, other spool assemblies may be used. For example, the spool assemblies disclosed at U.S. provisional patent application Ser. No. 61/370,070, filed Aug. 2, 2010, incorporated by reference above, can be included in certain embodiments. In still other embodiments, the cable spool **352**, described above, can be included.

Referring now to FIGS. **38** and **39**, a telecommunications assembly **10'** is shown. The telecommunications assembly **10'** is adapted for mounting to the telecommunications rack **15** (see FIG. **1**). The telecommunications assembly **10'** is similar

to the telecommunications assembly **10**, described above, and includes a chassis **12'**, similar to the chassis **12**, and a tray assembly **14"**, similar to the tray assemblies **14**, **14'**, that removably mounts in the chassis **12'**. Similar to the chassis **12**, the chassis **12'** includes a first opening **52'** and a second opening **54'** (see FIG. **40**). As depicted, a cover **22'** of the chassis **12'** and a base **16'** of the chassis **12'** are adjacent the first opening **52'** and the second opening **54'** and are also adjacent an interior region **50'** of the chassis **12'**. As depicted, the cover **22'** is positioned opposite the base **16'** about the interior region **50'**. The tray assembly **14"** is adapted for insertion into the chassis **12'** through either the first opening **52'** or the second opening **54'** of the chassis **12'** and into the interior region **50'**. In the depicted embodiment, the first opening **52'** is a front opening, and the second opening **54'** is a back opening. In the depicted embodiment, the second opening **54'** is oppositely disposed from the first opening **52'**.

As depicted, an access opening **404** is formed by the cover **22'**, and an access opening **406** is formed by the base **16'**. The access opening **406** can include a first region **406***a* and a second region **406***b*. The access openings **404**, **406** can be adjacent the first opening **52'**. In other embodiments, the access openings **404**, **406** can be separated from the first opening **52'**. The access opening **404** provides access to an adapter module **190"** of a termination area **154"**. The adapter module **190"** is similar to the adapter modules **190** and **190'**, described above, and the termination area **154"** is similar to the termination areas **154** and **154'**, also described above. The access openings **404**, **406** allow fiber optic cables to be routed to the adapter module **190"** and thereby allow the fiber optic cables to be connected to the fiber optic adapters **194** mounted in the adapter module **190"**. The access opening **404** allows the fiber optic cables to be routed adjacent and/or through the cover **22'**, and the access opening **406** allows the fiber optic cables to be routed adjacent and/or through the base **16'**. The fiber optic cables can thereby be routed to other areas about the telecommunications rack **15**. Thus, fiber optic cables can be routed to the adapter module **190"** from above and/or below the telecommunications assembly **10'**.

In certain embodiments, the telecommunications assembly **10'** includes a front cover plate **320'**. The front cover plate **320'** is engaged to a hinge **322'**. In the depicted embodiment, the hinge **322'** is connected between the front cover plate **320'** the base **16'**. The hinge **322'** can be similar in form and function to the hinge **322**, described above. In the depicted embodiment, the front cover plate **320'** is adapted to pivot between an open position (shown at FIGS. **38** and **39**) and a closed position (shown at FIG. **40**). As depicted, when in the closed position, the front cover plate **320'** extends between the cover **22'** and the base **16'** and substantially covers the interior region **50'** from a front side. As depicted, when in the closed position, the front cover plate **320'** substantially covers the first opening **52'** from the front side. The front cover plate **320'** can be held in the closed position by latches **408**. As depicted, the latches **408** can engages tabs **410** of the cover **22'**.

The front cover plate **320'** can include labels **270'**. The labels **270'** can be similar in form and function to the labels **270**, described above. As depicted, the labels **270'** can be associated with individual fiber optic adapters **194**. As depicted, the labels **270'** can be viewed when the front cover plate **320'** is in the open position. As depicted, the front cover plate **320'** does not cover the access openings **404**, **406**. A clip **412** of the front cover plate **320'** can be used to hold the labels **270'**.

The telecommunications assembly **10'** includes a panel **380** (i.e., a bracket and/or a cover). The panel **380** includes a first fastening location **382** and a second fastening location **384**. As depicted, the first fastening location **382** is adjacent a first end portion **386** of the panel **380**, and the second fastening location **384** is at or near a center portion **388**. The center portion **388** is positioned between the first end portion **386** and a second end portion **390**. The panel **380** can be mounted to the telecommunications assembly **10'**. In particular, the first fastening location **382** is joined to an attachment location **392** of the tray assembly **14"**, and the second fastening location **384** is joined to an attachment location **394** of the tray assembly **14"**. In the depicted embodiment, the attachment location **394** is located on the adapter module **190"** of the termination area **154"**. In the depicted embodiment the fasteners **214'**, described above, are used at the fastening locations **382**, **384**.

The mounting of the panel **380** to the telecommunications assembly **10'** can achieve one or more functions. In particular, a first function is providing a locking mechanism adapted to prevent a cable spool assembly **62"** of the tray assembly **14"**, with the attachment location **394**, and a tray **60"** of the tray assembly **14"**, with the attachment location **392**, from rotating relative to each other. A second function is providing an electrical connection between the attachment location **392** of the tray **60"** and the attachment location **394** of the cable spool assembly **62"**, and thus electrically ground the cable spool assembly **62"** and/or the adapter module **190"**. A third function is to provide stops **396**, **398** that are adapted to prevent the cable spool assembly **62"** and the tray **60"** from rotating relative to each other. A fourth function is to provide a mounting area **400** for mounting labels **270"**. The labels **270"** can be similar in form and function to the labels **270**, **270'** described above. A fifth function is to provide a cover **402** that covers the fiber optic cable **232** or a portion of the fiber optic cable **232** within the cable spool assembly **62"**.

As depicted, the panel **380** has an "L" shaped configuration extending from the first end portion **386** to the second end portion **390**. As depicted the first fastening location **382**, the second fastening location **384**, and the stops **396**, **398** can be formed from tabs that extend from the "L" shaped extrusion.

The panel **380** may be used in applications with restricted access to the rear of the telecommunications assembly **10'** (e.g., in outdoor applications). For example, in applications where access to the second opening **54'** is restricted and/or blocked, the panel **380**, which can be mounted through the first opening **52'**, can be used to lock and/or ground the cable spool assembly **62"** and thereby avoid using a lock and/or a grounding member at or near the second opening **54'**.

Referring now to FIG. **40**, a telecommunications assembly **10"** is shown. As depicted, the telecommunications assembly **10"** is a reconfiguration of the telecommunications assembly **10'**. In particular, a locking mechanism **240'** is included. The locking mechanism **240'** is similar to the locking mechanism **240**, described above. The locking mechanism **240'** is adapted to prevent the cable spool assembly **62"** from rotating relative to the tray **60"**. In one embodiment, the locking mechanism **240'** provides an electrical connection between the tray **60"** and the cable spool assembly **62"** so as to serve as a ground. The locking mechanism **240'** may be used in applications with access to the second opening **54'** and/or the rear of the telecommunications assembly **10"** (e.g., in indoor applications). The telecommunications assembly **10"** may or may not include the panel **380**.

The present disclosure describes components and embodiments that are similar to other components and embodiments. The various features and components of one embodiment may also be included in other embodiments, where appropriate.

Various modifications and alterations of this disclosure will become apparent to those skilled in the art without departing from the scope and spirit of this disclosure, and it should be understood that the scope of this disclosure is not to be unduly limited to the illustrative embodiments set forth herein.

What is claimed is:

1. A telecommunications system comprising:

a tray configured to mount within a housing adapted for connection to a telecommunications rack, the tray being slidably movable relative to the housing, the tray carrying at least one fiber optic adapter; the tray including a top surface and an oppositely disposed bottom surface;

a first spool mounted to the top surface of the tray, the first spool being rotatable relative to the tray about an axis of rotation, and the first spool including a drum portion; and

a second spool mounted to the tray at a location below the bottom side of the base, wherein the second spool can be mounted on a spindle supported by a spindle base.

2. The telecommunications system of claim **1**, wherein the tray is slidable in a front-to-back orientation.

3. The telecommunications system of claim **2**, wherein the housing includes a housing body defining a cross-dimension, a height, and a depth, the cross-dimension being measured in a direction perpendicular relative to the height and the depth, the housing body including front and back ends separated by the depth of the housing body.

4. The telecommunications system of claim **3**, wherein the tray slides out the front end.

5. The telecommunications system of claim **1**, wherein the first spool includes first and second flanges that are spaced apart along an axis of rotation of the first spool.

6. The telecommunications system of claim **1**, wherein the tray can be movable relative to the housing without requiring the first spool or the at least one fiber optic adapter to be detached from the tray.

7. The telecommunications system of claim **1**, further comprising a plurality of bend radius protectors on the tray, each of the bend radius protectors defining a passage that extends through the bend radius protector, the passage defining a central axis.

8. A telecommunications system comprising:

a housing adapted for connection to a telecommunications rack, the housing including a housing body and flanges for fastening the housing body to the telecommunications rack, the flanges being separated from one another by a cross-dimension of the housing body;

a tray configured to mount within the housing, the tray including a base having a top side and a bottom side;

a first spool mounted to the tray at a location above the top side of the base, the first spool being rotatable relative to the tray;

a plurality of fiber optic adapters, the fiber optic adapters being carried by the first spool when the first spool is rotated relative to the tray; and

a second spool mounted to the tray at a location below the bottom side of the tray, wherein the second spool is mounted on a spindle to facility paying out a main cable portion.

9. The telecommunications system of claim **8**, wherein the main cable portion is spooled about the first spool and is also spooled about the second spool.

10. The telecommunications system of claim **8**, wherein the tray rotates in concert with the second spool when the main cable portion of the fiber optic cable assembly is paid out from the second spool, and wherein the first spool rotates relative to the tray when the main cable portion is paid out from the first spool.

11. The telecommunications system of claim **8**, wherein the main cable portion includes a jacket containing a plurality of optical fibers.

12. The telecommunications system of claim **8**, wherein the tray is slidable in a front-to-back orientation.

13. The telecommunications system of claim **8**, further comprising a manual spool lock that is adapted for engagement with the first spool to prevent rotation of the first spool relative to the tray.

14. The telecommunications system of claim **8**, wherein the housing body defines a cross-dimension, a height, and a depth, the housing body including front and back ends separated by the depth of the housing body.

15. The telecommunications system of claim **14**, wherein the plurality of fiber optic adapters can be located at a first position in which the plurality of fiber optic adapters are accessible from the front end of the housing body.

16. The telecommunications system of claim **8**, further comprising a plurality of bend radius protectors on the tray, each of the bend radius protectors defining a passage that extends through the bend radius protector, the passage defining a central axis.

17. The telecommunications system of **8**, wherein the plurality of fiber optic adapters are positioned at a forward location that is forwardly offset from the first spool.

18. A method of using a telecommunications deployment device, the device comprising a cable assembly, the cable assembly including a tray assembly having a tray, and a cable spool assembly adapted to rotate relative to the tray, the cable spool assembly including a hub, a first flange engaged to the hub, and a second flange engaged to the hub opposite the first flange, the tray being configured to mount within a housing adapted for connection to a telecommunications rack, and the tray assembly also including a cable spool including first and second, opposite, flanges with a drum positioned therebetween, the tray assembly being mounted to an outer surface of the first flange of the cable spool; the method comprising:

positioning the cable assembly adjacent to a telecommunications mount;

wrapping a first end of a length of fiber optic cable about the cable spool assembly of the tray assembly and the drum of the cable spool;

deploying the fiber optic cable from the cable spool of the cable assembly causing rotation of the cable spool and concurrent rotation of the tray assembly carried by the cable spool;

after the fiber optic cable is paid out from the cable spool, rotating the cable spool assembly of the tray assembly relative to the tray and the cable spool to pay off additional fiber optic cable disposed about the cable spool assembly;

removing the cable spool from the tray assembly; and

installing the tray assembly in the telecommunications rack.

19. The method of claim **18**, wherein the tray assembly is inserted into the telecommunications rack from the front.

20. The method of claim **18**, wherein the tray assembly is inserted into the telecommunications rack from the back.

* * * * *