US009284091B2

(12) **United States Patent**
Shalkop

(10) **Patent No.: US 9,284,091 B2**
(45) **Date of Patent: Mar. 15, 2016**

(54) **DAY OF OPENING REMINDER FOR A CONTAINER**

(71) Applicant: **David Lawrence Shalkop**, Jupiter, FL (US)

(72) Inventor: **David Lawrence Shalkop**, Jupiter, FL (US)

(*) Notice: Subject to any disclaimer, the term of this patent is extended or adjusted under 35 U.S.C. 154(b) by 0 days.

(21) Appl. No.: **14/211,409**

(22) Filed: **Mar. 14, 2014**

(65) **Prior Publication Data**

US 2014/0262900 A1 Sep. 18, 2014

Related U.S. Application Data

(60) Provisional application No. 61/783,496, filed on Mar. 14, 2013.

(51) **Int. Cl.**

B65D 51/24	(2006.01)
B65D 5/72	(2006.01)
B65D 5/74	(2006.01)
B65D 5/42	(2006.01)

(52) **U.S. Cl.**

CPC ***B65D 5/727*** (2013.01); ***B65D 5/4212*** (2013.01); ***B65D 5/746*** (2013.01)

(58) **Field of Classification Search**

CPC B65D 51/245; B65D 5/068; B65D 5/727; B65D 5/4212; B65D 5/746; A61J 7/04; G09F 3/00; G09F 2003/0208

USPC 206/459.1, 459.5, 831, 534; 229/116.1, 229/118, 87.08; 116/308; 40/637

See application file for complete search history.

(56) **References Cited**

U.S. PATENT DOCUMENTS

2,024,889	A		12/1935	Simeone
2,201,524	A		5/1940	Esty
2,470,199	A	*	5/1949	Stewart 229/213
2,750,095	A	*	6/1956	Alden 229/214
3,116,002	A		12/1963	Crawford et al.
3,120,333	A		2/1964	Seiple
3,120,335	A		2/1964	Egleston et al.
3,185,375	A		5/1965	Thomas
3,205,603	A	*	9/1965	Brumley 206/459.1
3,232,516	A		2/1966	Arslanian
3,339,820	A	*	9/1967	Krzyzanowski 229/216
3,349,988	A		10/1967	Horning
3,498,815	A	*	3/1970	Moors et al. 427/145
3,770,185	A	*	11/1973	Reeves 229/213
3,818,858	A		6/1974	Kramer et al.
3,825,168	A		7/1974	MacEwen
4,093,115	A	*	6/1978	Bachner et al. 229/216

(Continued)

FOREIGN PATENT DOCUMENTS

WO 91/13005 9/1991

Primary Examiner — Steven A. Reynolds

(74) *Attorney, Agent, or Firm* — Fleit Gibbons Gutman Bongini & Bianco PL; Jon A. Gibbons

(57) **ABSTRACT**

A container (**100** and **600**) has a sealed top formed from adhered sealing panels at a top of the container that keeps contents of the container sealed until ready for use. A top of the container is provided with a day of opening reminder (**131** and **631**). The day of opening reminder includes tabs (**163**, **563** and **663**) made of a same material as the container. Each tab includes a different symbol that corresponds to a name of a day of the week. The day of opening reminder includes perforations (**134** and **634**) or cuts between each tab thereby allowing one of the tabs to be moved into a different position relative to the other tabs, thereby conveying information about the day of week that the container was first opened.

20 Claims, 10 Drawing Sheets

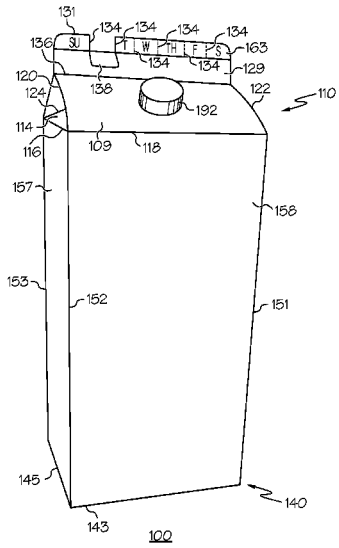

(56) **References Cited**

U.S. PATENT DOCUMENTS

4,194,674	A		3/1980	Pearson	
4,356,951	A		11/1982	Sharp	
4,621,670	A		11/1986	Yuen	
4,630,733	A	*	12/1986	Fear	206/459.1
4,691,858	A		9/1987	Peer, Jr.	
4,805,775	A	*	2/1989	Fear	206/459.1
4,834,241	A		5/1989	Southern	
4,901,457	A	*	2/1990	Chandler	40/306
4,915,236	A		4/1990	Kamin et al.	
5,492,077	A		2/1996	Rose	
5,501,394	A	*	3/1996	Eno	229/137
5,516,037	A		5/1996	Okamoto et al.	
5,601,233	A	*	2/1997	Kageyama et al.	229/216
5,662,265	A	*	9/1997	Jensen	229/107
5,881,597	A		3/1999	Brooks	
6,089,180	A	*	7/2000	Nichols, Jr.	116/309
D439,744	S	*	4/2001	Ho	D3/323
6,244,456	B1	*	6/2001	Hanlon	220/269
6,868,627	B2		3/2005	Elias	
6,938,768	B2		9/2005	Ferretti et al.	
7,617,622	B2		11/2009	Elias	
7,987,621	B2		8/2011	Elias	
8,020,507	B2		9/2011	Strong	
8,302,846	B2		11/2012	Koeda et al.	
2004/0060840	A1		4/2004	Williams et al.	
2005/0236293	A1	*	10/2005	Turvey et al.	206/459.1
2008/0110785	A1	*	5/2008	Rocco	206/459.5
2010/0044267	A1	*	2/2010	Tolibas-Spurlock et al.	206/524.7
2010/0108555	A1		5/2010	Genosar	
2010/0326864	A1	*	12/2010	Campbell	206/459.5

* cited by examiner

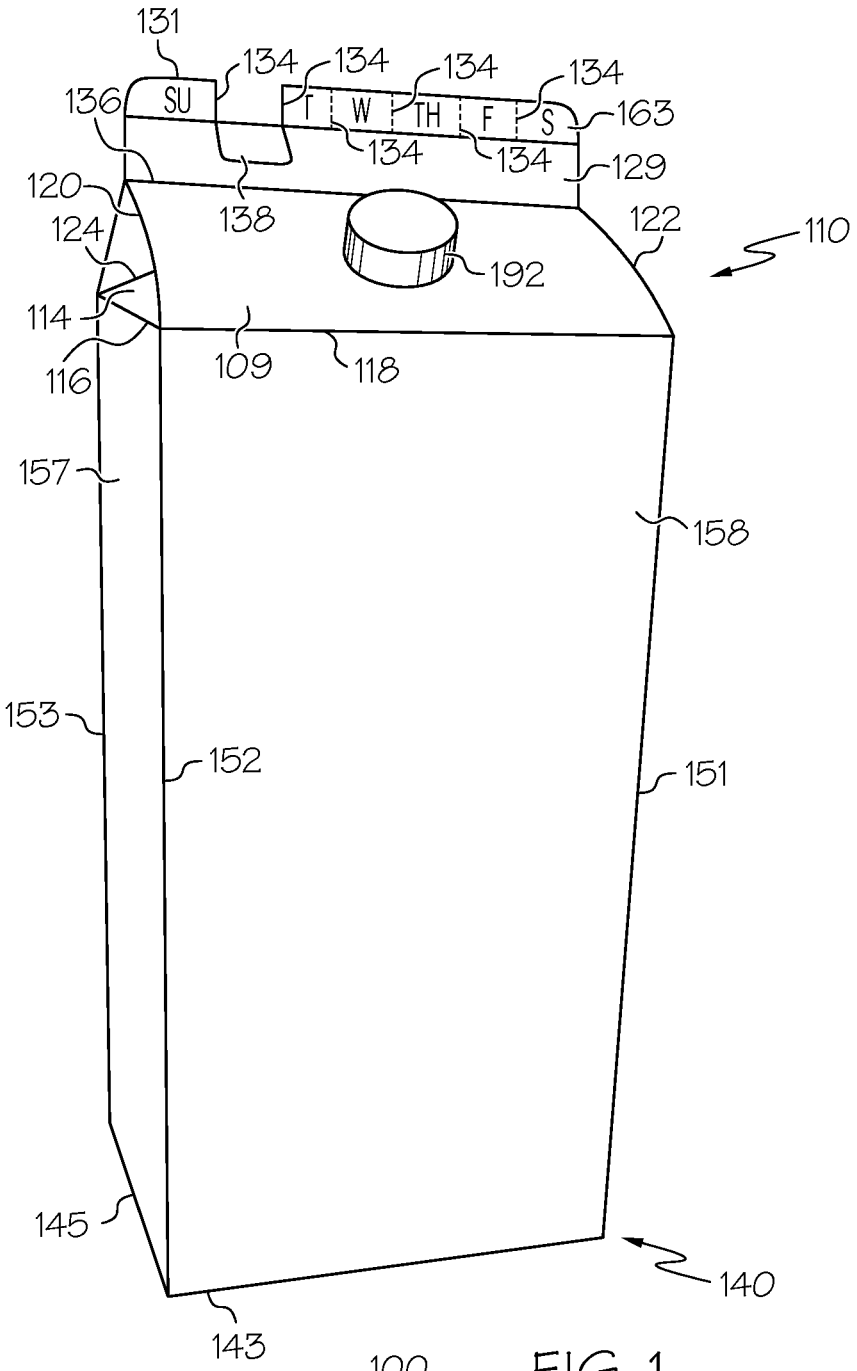
131
134
134
134
134
136
SU
T
W
TH
F
S
163
134
134
129
120
138
122
110
124
192
114
109
118
116
157
158
153
152
151
145
140
143

100 FIG. 1

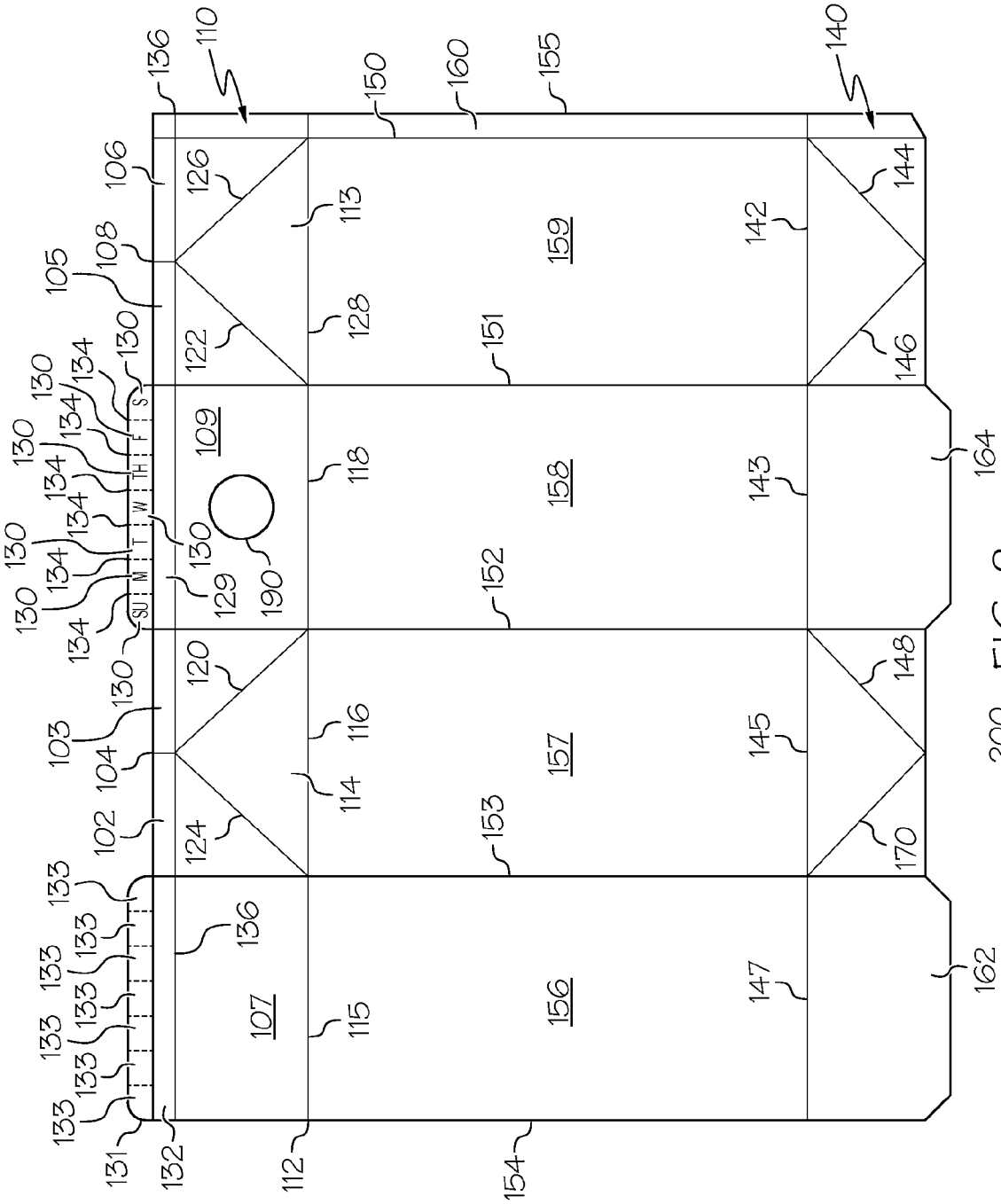
110
136
150
160
155
140
106
126
113
159
142
144
108
105
122
128
151
146
130
134
109
118
158
143
164
129
190
152
120
148
103
104
116
157
145
102
124
114
153
170
133
136
107
115
156
147
162
131
132
112
154
SU
M
T
W
TH
F
S

200 FIG. 2

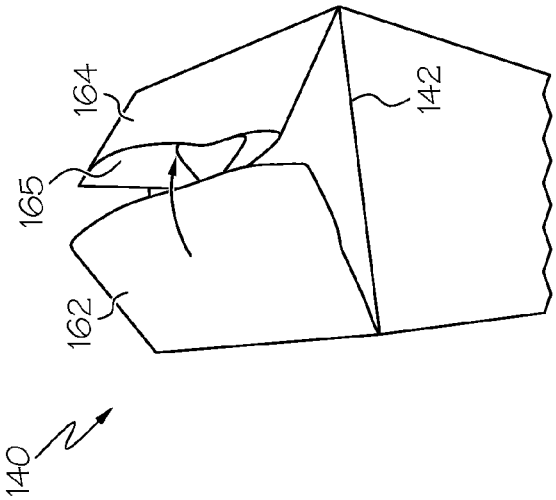

FIG. 3B

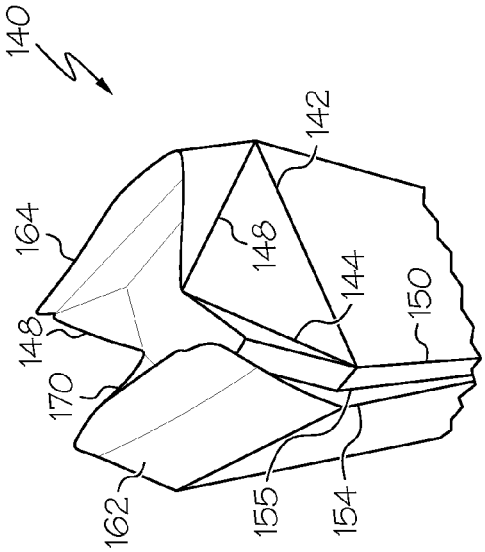

FIG. 3A

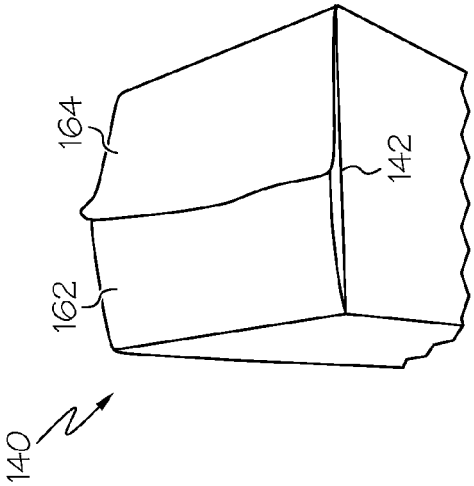

FIG. 3C

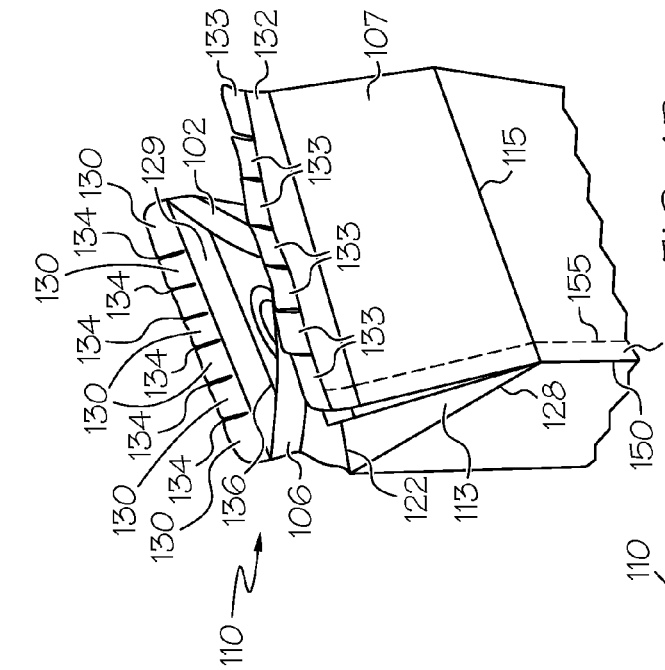

FIG. 4B

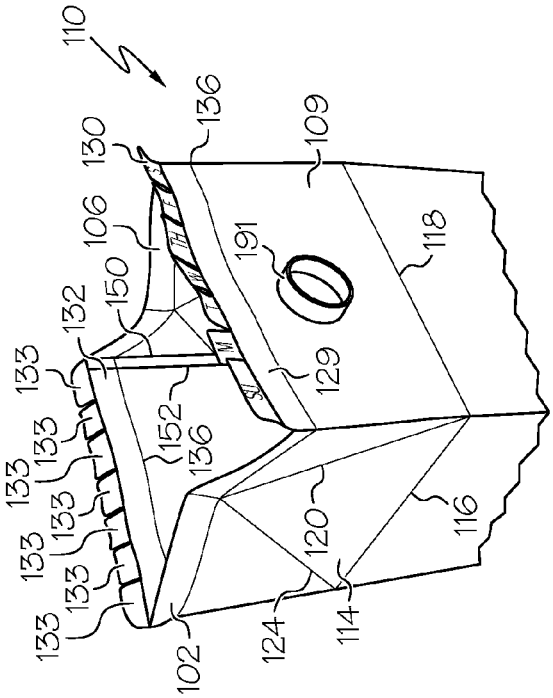

FIG. 4A

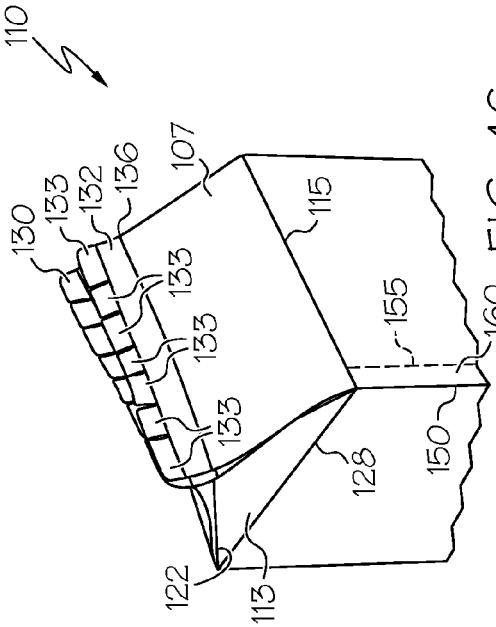

FIG. 4C

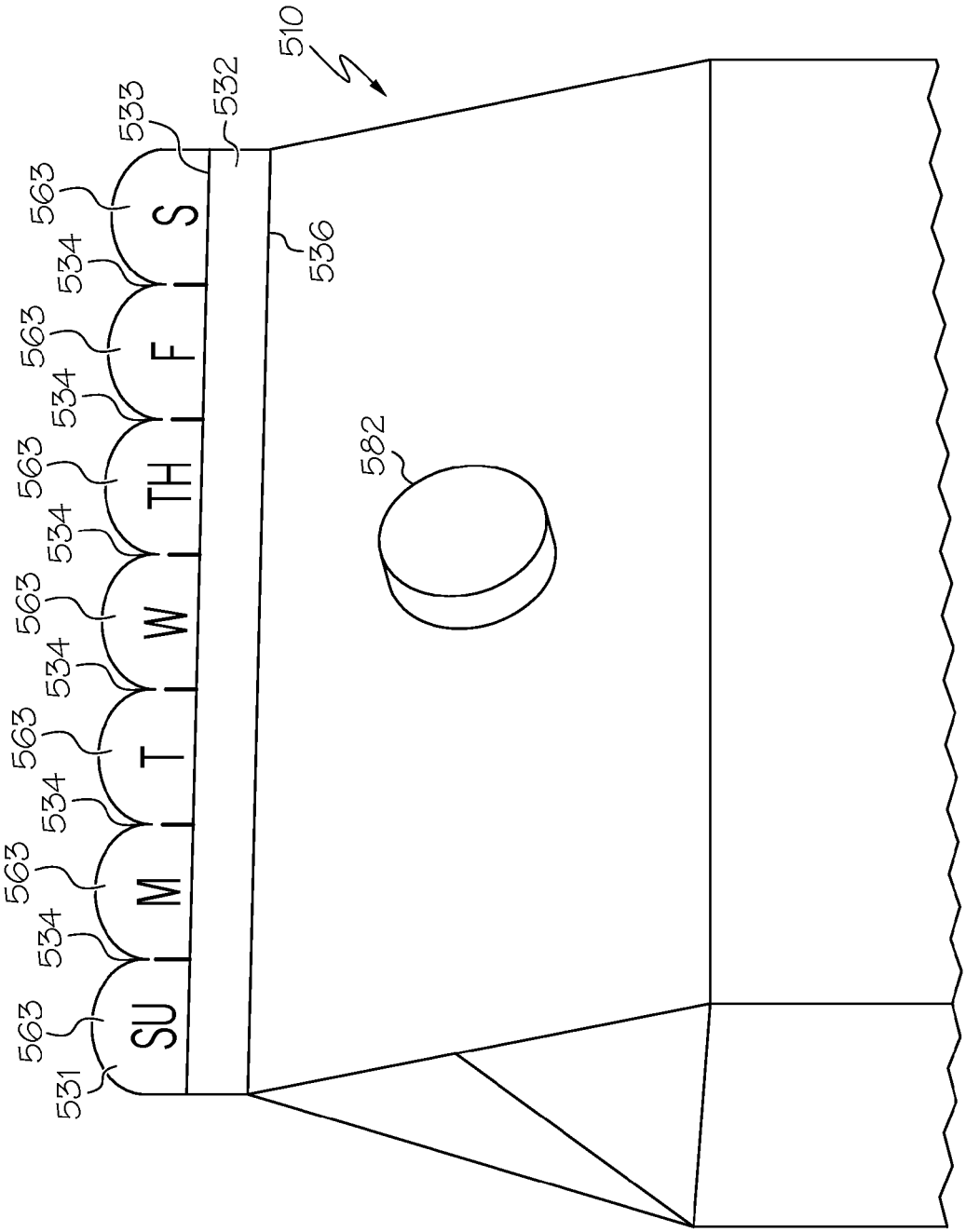

FIG. 5 500

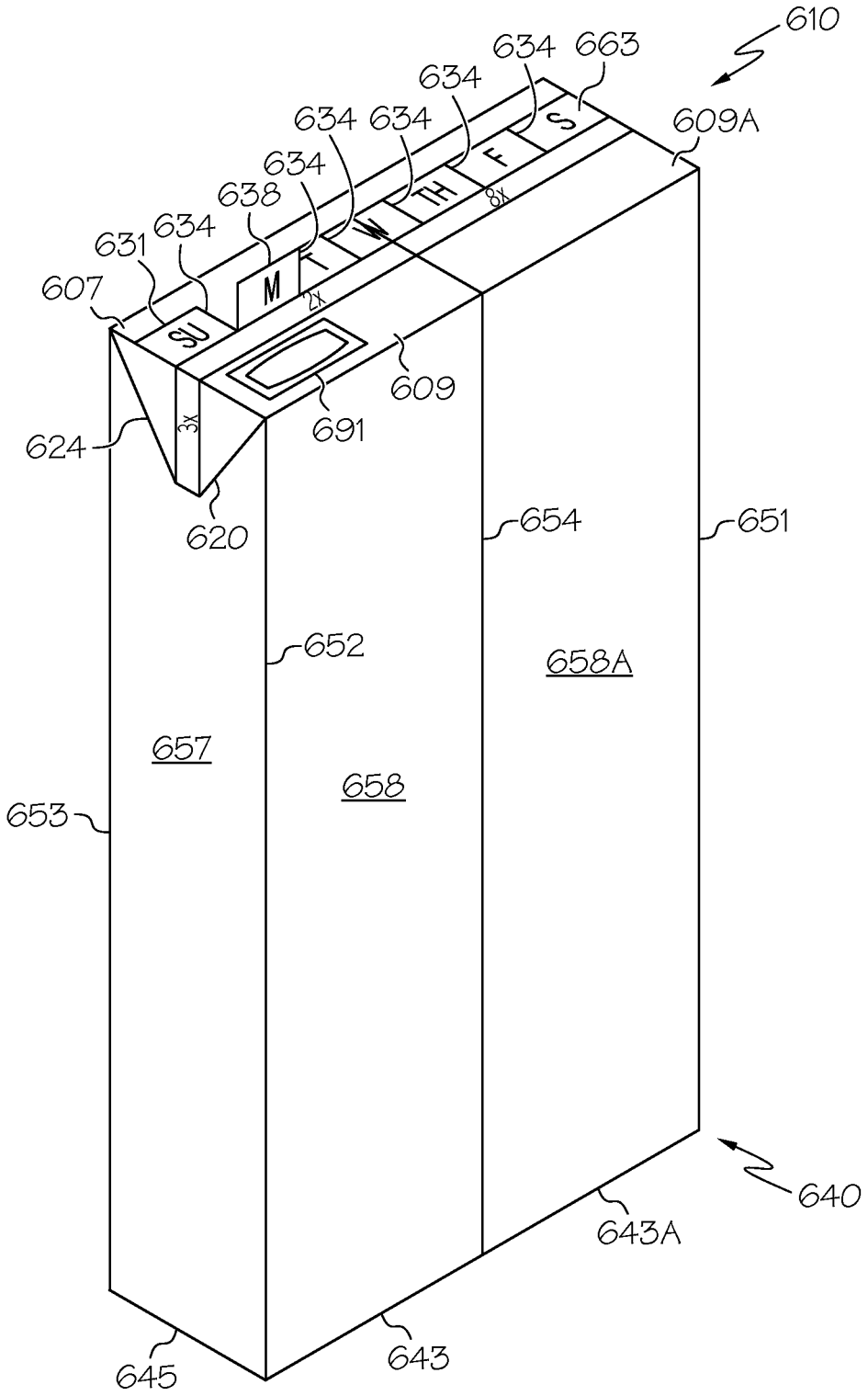
610
634
663
634
634
634
609A
634
638
631
634
607
SU
M
T
W
TH
F
S
8x
2x
3x
609
691
624
620
654
651
652
658A
657
658
653
640
643A
645
643

FIG. 6

600

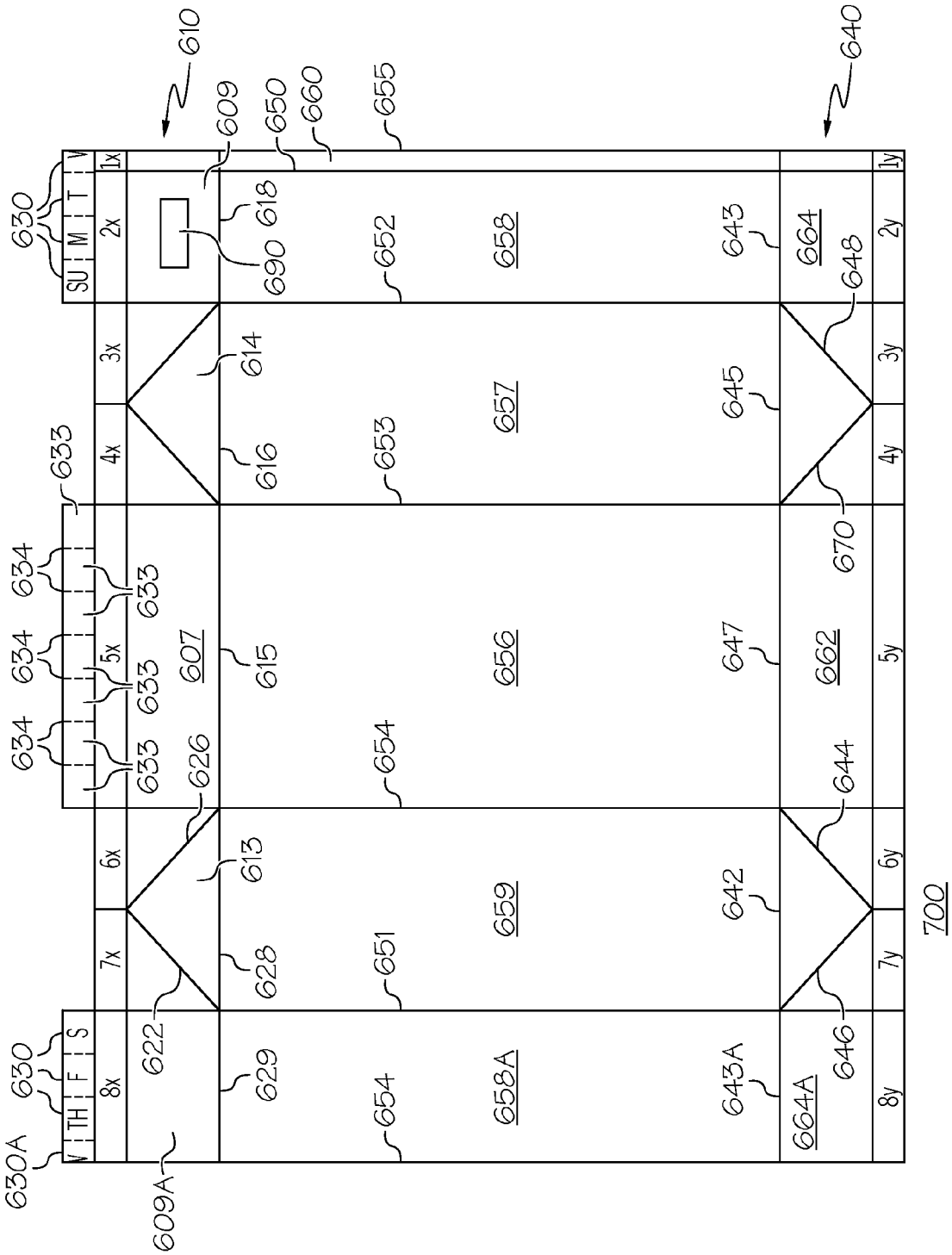
610
640
609
650
660
655
630
SU
M
T
W
1x
2x
3x
4x
5x
6x
7x
8x
TH
F
S
1y
2y
3y
4y
5y
6y
7y
8y
618
690
652
658
643
664
648
614
616
653
657
645
670
633
634
607
615
656
647
662
626
654
644
613
628
651
659
642
622
629
658A
643A
664A
646
630A
609A
700

FIG. 7

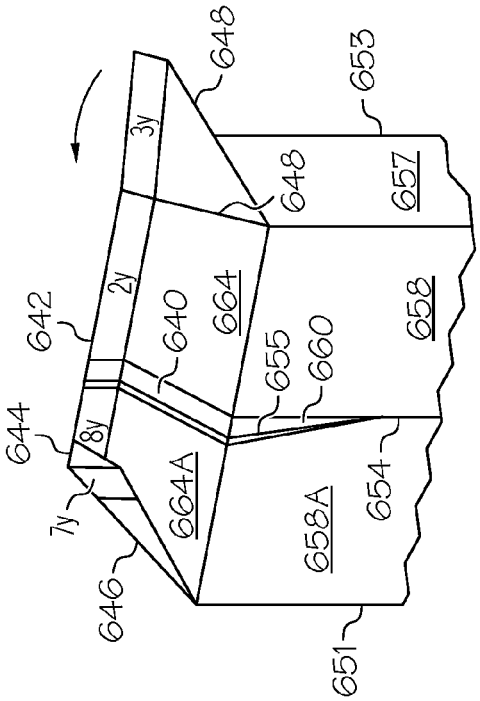

FIG. 8B

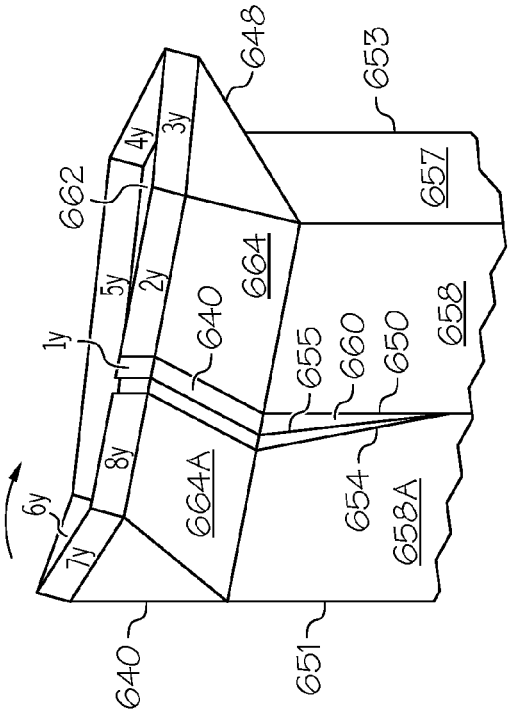

FIG. 8A

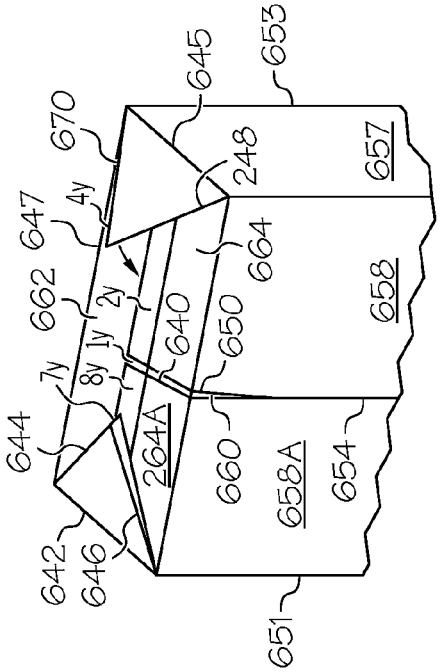

FIG. 8C

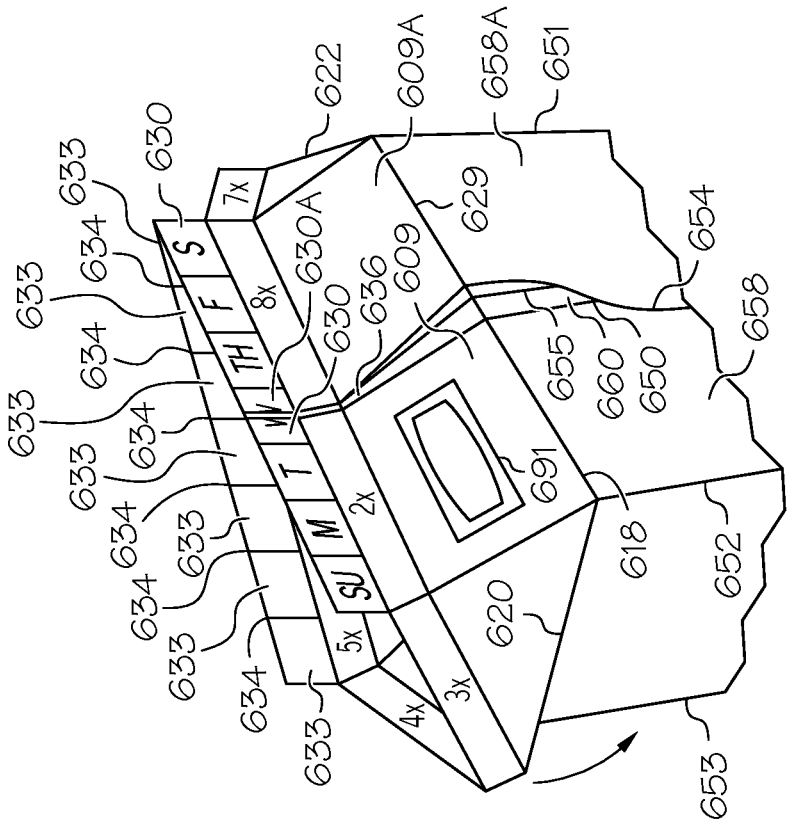
622
609A
658A
651
630
633
634
629
630A
609
636
654
658
655
660
650
691
618
652
620
653
7x
8x
2x
3x
4x
5x
S
F
TH
W
T
M
SU

FIG. 9B

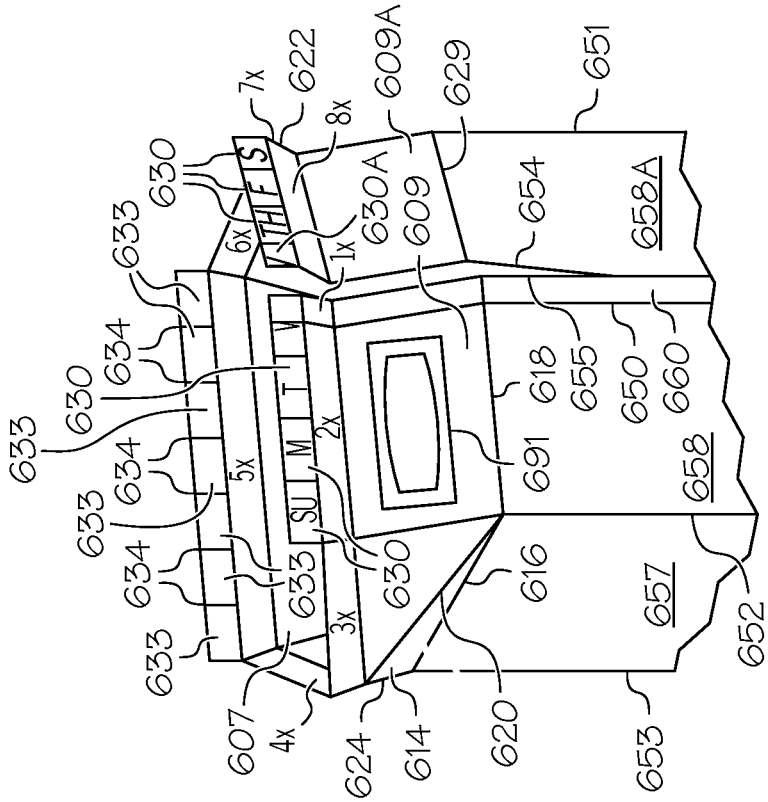
7x
622
609A
629
651
630
633
634
630A
609
654
658A
618
655
650
660
691
658
616
657
652
607
624
614
620
653
6x
1x
2x
3x
4x
5x
S
F
TH
W
T
M
SU

FIG. 9A

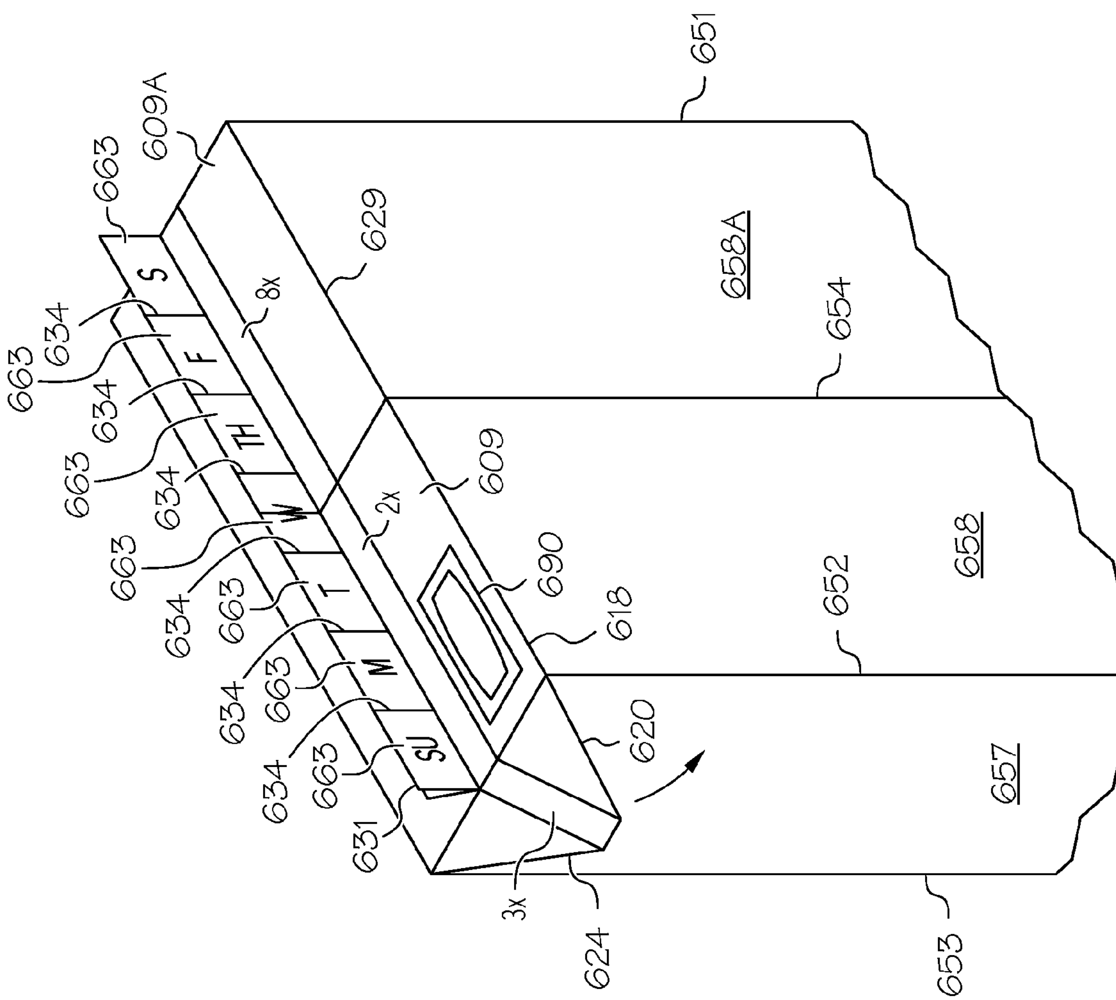
651
609A
663
629
658A
654
634
S
F
TH
W
T
M
SU
8x
2x
609
690
618
658
652
620
657
631
3x
624
653

FIG. 9C

DAY OF OPENING REMINDER FOR A CONTAINER

CROSS-REFERENCE TO RELATED APPLICATION

This application is based upon and claims priority to U.S. Provisional Patent Application Ser. No. 61/783,496, entitled "DAY OF OPENING REMINDER FOR A CONTAINER" and filed Mar. 14, 2013, the entire disclosure of which is hereby incorporated by reference herein.

BACKGROUND

1. Field

This invention relates generally to containers, and more specifically to paperboard-style containers.

2. Related Art

Paperboard-style containers are designed to hold any one of many diverse substances including liquid products, such as dairy and dairy-substitute products. Containers of dairy and dairy-substitute products, such as soy, almond and rice milk, have a "use-by" date imprinted on the container. Containers of other types of perishable liquids and food products may also have a "use-by" date imprinted on the container. Typically, the "use-by" date is a date that is several weeks or months subsequent to a date on which the container was filled with a perishable liquid or food product by a supplier of the product. Oftentimes, the container also specifies that the product should be used within a certain number of days subsequent to the date on which the container was first opened.

A paperboard-style container is formed from a blank which is a single, flat piece of paperboard-like material that is shaped and sized such that it can form a paperboard-style container. The blank usually has several fold lines. The paperboard-style container is formed by folding the blank along the several fold lines. Some type of adhesive maintains the blank in a shape of a container, after folding. The paperboard-style container usually has a shape of a tubular body having a square or rectangular cross-section and four large flat sides, a flat bottom and a gable top or a flat top.

BRIEF DESCRIPTION OF THE DRAWINGS

The present invention is illustrated by way of example and is not limited by the accompanying figures, in which like references indicate similar elements. Elements in the figures are illustrated for simplicity and clarity and have not necessarily been drawn to scale.

FIG. **1** is a perspective view of one embodiment of a gable-top paperboard-style container in accordance with the invention.

FIG. **2** is a plan view of one embodiment of a blank of the gable-top paperboard-style container of FIG. **1**.

FIGS. **3**A, **3**B and **3**C are perspective views of a bottom portion of the gable-top paperboard-style container of FIG. **1** at three successive stages of manufacture.

FIGS. **4**A, **4**B and **4**C are perspective views of a top portion of the gable-top paperboard-style container of FIG. **1**, at three successive stages of manufacture.

FIG. **5** is a perspective view of a top portion of another embodiment of a gable-top paperboard-style container in accordance with the invention.

FIG. **6** is a perspective view of one embodiment of a flat-top paperboard-style container in accordance with the invention.

FIG. **7** is a plan view of one embodiment of a blank of the flat-top paperboard-style container of FIG. **6**.

FIGS. **8**A, **8**B and **8**C are perspective views of a bottom portion of the flat-top paperboard-style container of FIG. **6** at three successive stages of manufacture.

FIGS. **9**A, **9**B and **9**C are perspective views of the top portion of the flat-top paperboard-style container of FIG. **6**, at three successive stages of manufacture.

DETAILED DESCRIPTION

Typically, a paperboard-style container (hereinafter "container") that holds a dairy or dairy-substitute product, other perishable food or any perishable liquid (hereinafter "product" or "contents of the container") specifies that the product should be used within certain predetermined period subsequent to a date on which the container is first opened. A problem is that once the container is opened, there is nothing on the container to inform a user of the day that the container was first opened; therefore, a user does not know when the certain predetermined period has expired. A user should not rely on a use-by date imprinted on the container because the use-by date could be, and usually is, a date farther in the future than an end date of the certain predetermined period. A typical certain predetermined period is five (5) to ten (10) days.

A container in accordance with the invention comprises a day of opening reminder. The day of opening reminder comprises a plural number of tabs. In one embodiment, the number of tabs is seven (7), each tab representing one of the seven days of a week. The tabs are at a top of the container. In one embodiment, the container has a gable top (see FIGS. **1**-**5**), and the tabs are at a top edge of the gable. In another embodiment, the container has a flat top (see FIGS. **6**-**10**). In one embodiment, the tabs are perforated tabs. The perforated tabs are formed during manufacture of the container. In one embodiment, the perforated tabs are formed when the container is still in the form of a blank. In such embodiment, the tab material is an integral part of the blank material, and lines of perforations are made in the blank to form and define the perforated tabs. Typically, the perforations are made in the blank at about the same time that fold lines are made in the blank. The term "perforations" means partial cuts made in the paperboard-like material between the tabs, thereby defining each tab, and allowing a tab to be at least partially separated from the container using reasonable manual force, but otherwise allowing all the tabs to remain completely connected to the container absent application of the reasonable manual force. In another embodiment, a cut is made between each tab during the manufacture of the container.

Each of the seven perforated tabs includes an indication of a different day of the week. In one embodiment, each tab includes a name of a different day of a week or an abbreviation for the name of a different day of a week. In one embodiment, each of the seven perforated tabs has one of the following letters on it: SU, M, T, W, TH, F and S, which represent Sunday, Monday, Tuesday, Wednesday, Thursday, Friday and Saturday, respectively. The letters are printed or embossed, or both printed and embossed on the tabs. In another embodiment (not shown), each tab includes a numeral that corresponds to a week as a whole, i.e., week one to week seven. In another embodiment, there are eight (8) perforated tabs with one of the following markings on each perforated tab: SU, M, T, W, TH, F, S and 1 WK, which represent Sunday, Monday, Tuesday, Wednesday, Thursday, Friday, Saturday and one week, respectively. For products that last longer than seven (7) days, the one week tab could be bent using reasonable manual force to show that seven (7) days have passed since the container was opened.

Some containers have the use-by date printed on one side of the gable of the container. In such instances, the letters representing the days of the week, in accordance with the invention, are printed on the opposite side of the gable of the container. However, in some other embodiments, the letters representing the days of the week can be printed on the same side as the use-by date. Furthermore, in still other embodiments, the letters representing the days of the weeks can be printed on the same side as the use-by date and on the side opposite the side that has the use-by date.

When the container in accordance with the invention is opened for the first time, a user folds a tab representing a day of the week on which the container was opened. In the embodiment that has a line of perforations between adjacent tabs, a user folds such tab by manually breaking the perforations on each side of such tab. In the other embodiment that has a cut line between adjacent tabs, a user simply folds such tab. A user who initially opened the container can then be reminded of the day that the user initially opened the container by looking at the state, or condition, of the tabs. A user who did not initially open the container can learn the day that the container was first opened by another user by looking at the state, or condition, of the tabs. In other words, the state, or condition, of the tabs provides evidence of the day that the container was first opened. At all subsequent times, the user, including any user, will then know which day within the certain predetermined period of days that the container was first opened. For example, if the product is to be consumed within seven (7) days, then eight (8) days after the container was first opened, a user will know to dispose of the container and its contents, and possibly purchase more of the product. For example, if a user sees that the tab representing Wednesday is folded down, and the product is to be consumed within seven (7) days from opening, then the user will know to stop using the product in the container after Wednesday of the following week.

FIG. **1** is a perspective view of one embodiment of a gable-top paperboard-style container **100** (hereinafter "container **100**") in accordance with the invention. The container **100** includes a body that has a general shape of a parallelepiped. In one embodiment, the body has a general shape of a rectangular cuboid. FIG. **1** shows the container **100** with a substantially gable top **110**, a substantially flat bottom **140**, and four flat sides (only two of these four flat sides, main body panels **157** and **158**, appear in FIG. **1**). The container **100** is a type of container that is widely used for packaging of edible liquids such as milk, dairy, dairy-substitutes, fruit juices, broths, eggs, etc., that have a use-by date. The container **100** can also be used for packaging non-edible liquids and granular or pourable materials that have a use-by date. The container **100** is formed from a paperboard blank **200** (see FIG. **2**). The container **100** has a sealed gable top at a top of the container that keeps the container sealed until the contents of the container are ready for use. The sealed gable top is created by sealing panels **102**, **103**, **105**, **106**, **129** (see FIG. **2**) and **132**, which also form a ridge at an apex of the gable top. The ridge at the apex of the gable top is provided with a day of opening reminder **131** in accordance with the invention. The day of opening reminder **131** includes a set of seven tabs **163** made of a same material as the container.

The day of opening reminder **131** includes lines of perforations **134** between each tab. The lines of perforations **134**, when selectively broken, allow any one of the seven tabs **163** to be moved into a different position relative to the other tabs, thereby conveying information about the day of week that the container **100** was first opened. Tab **138** is one tab among the plurality of tabs **163** which has been assigned a specific reference number for discussion purposes herein. Tab **138** is the second tab from the left in FIG. **1**. Comparing FIG. **1** and FIG. **4**A, it can be seen that the second tab from the left has an "M" on it. As shown in FIG. **1**, tab **138** has been separated along the lines of perforations **134** between tab **138** and the tabs **163** on each side of tab **138**. In FIG. **1**, the second tab from the left, i.e., tab **138**, is shown in a bent down position from its original position. Advantageously, a user is able to manually bend down tab **138** without bending down any of the other tabs, and, in particular, without bending down the adjacent tabs. As shown in FIG. **1**, the tab **163** with "SU" on it and the tab **163** with "T" on it remain in their original upright positions. Advantageously, repositioning one tab relative to the other tabs does not affect the seal of the container **100**. The sealing panels prevent the contents of the container **100** from coming out of the container through the apex in spite of a tab, such as tab **138**, being bent down.

In one embodiment, the container **100** includes a cap **192** on a spout side of the container, as shown in FIG. **1**. In such embodiment, cap **192** is a threaded plastic cap that can be removed so that the product can be poured out. In another embodiment that lacks a spout, the product is poured out by manipulating the gable top so as to open part of the gable top in a manner well known, thereby making a spout.

FIG. **2** is a plan view of one embodiment of a blank **200** of the gable-top paperboard-style container **100**. In one embodiment, the blank **200** comprises paper covered with a substance, such as wax, thermoplastic resin or another material appropriate for such application, to make the paper nearly leak-proof or completely leak-proof, and, in some cases, also sterile. In other embodiments, the blank **200** is not made with paper but instead is made with other suitable materials such as plastic. The blank **200** is divided in conventional fashion by longitudinal crease, or fold, lines **150-153** into four main body panels **156-159**. The blank **200** has a left edge **154**, a right edge **155**, and a flap **160** between fold line **150** and the right edge **155**. An adhesive is applied at the flap **160** to maintain the blank **200** in a form of the container **100** after the blank is folded into the shape of the container. Lateral fold lines **115**, **116**, **118** and **128** separate the main body panels **156-159** from the top **110** of the blank **200**. Of course, the top **110** of the blank **200** becomes the top of the container **100**, after manufacture.

Still other lateral fold lines **142**, **143**, **145** and **147** separate the main body panels **156-159** from the bottom **140** of the blank **200**. Angular fold lines **144**, **146**, **148** and **170** define flaps of the bottom **140**. The bottom **140** includes exterior flaps **162** and **164**. The other lateral fold lines **142**, **143**, **145** and **147** separate the main body panels **156-159** from the bottom **140** of the blank **200**. Of course, the bottom **140** of the blank **200** becomes the bottom of the container **100**, after manufacture. The bottom **140** includes exterior flaps **162** and **164**.

The top **110** of the blank **200** includes portions of the blank that will form the gable top. The top **110** includes a rear top panel **107** and front top panel **109** directly above main body panels **156** and **158**, respectively. Above main body panels **157** and **159** are triangular side panels **114** and **113**, respectively, each triangular side panel having two subordinate end panels on either side thereof. Above the array of top panels there are corresponding sealing panels that are divided by lateral score lines into sealing panels **102**, **103**, **105**, **106**, **129** and **132**. In one embodiment, the top panel **109** includes a hole **190**. The top **110** of the blank **200** includes portion(s) of the blank that will form the day of opening reminder **131** in accordance with the invention. The top **110** includes tab portions **130** and tab portions **133**. In FIG. **2**, the day of week

indicators are shown on the tab portions **130**. Referring now to FIGS. **1** and **2**, the tabs **163** of the day of opening reminder **131** are formed when the tab portions **130** and the tab portions **133** are brought together. The day of opening reminder **131** is made of a same material as the blank **200** and is an integral part of the blank.

FIGS. **3**A, **3**B and **3**C are perspective views of a bottom portion of the container **100**, at three successive stages of manufacture, in a manner well known, starting with FIG. **3**A and ending with FIG. **3**C.

FIGS. **4**A, **4**B and **4**C are perspective views of a top portion of the container **100**, at three successive stages of manufacture, in a manner well known, starting with FIG. **4**A and ending with FIG. **4**C. After the container **100** is filled with product, the triangular side panels **113** and **114** are folded inward over the top of the container, bringing sealing panels **102**, **103**, **105**, **106**, **129** and **132** into contact with each other, and all of these upper sealing panels are adhered together to form a liquid-tight gable top closure for the filled container. When so adhered, sealing panels **102**, **103**, **105**, **106**, **129** and **132** surmount the top of the container and form a narrow ridge, extending from one end to the other end of the apex of the gable top. In one embodiment, the top panel **109** includes an element **191** that fits into hole **190**, as shown in FIG. **4**A. The element **191** is a threaded plastic element that accepts cap **192**.

Each tab **163** of the day of opening reminder **131** includes a different marking, or symbol, that corresponds to a name of a day of the week. In one embodiment, such symbols are added to the tabs **163** of the day of opening reminder **131** when the container is in the form of the blank **200**. In another embodiment, such symbols are added to the tabs **163** of the day of opening reminder **131** after the blank **200** is formed into the container **100**. In still another embodiment, such symbols are added to the tabs **163** of the day of opening reminder **131** after container **100** is filled with product and sealed. In yet another embodiment, such symbols are added to the tabs **163** of the day of opening reminder **131** after container **100** is filled with product and sealed, and at a same time as the use-by date is added to the container.

FIG. **5** is a perspective view of a top portion **500** of a gable-top container in accordance with another embodiment of the invention. The top portion **500** includes a gable top **510**, and a cap **582**. A sealing panel exists above a lateral crease line **536**. A day of opening reminder **531** exists above a lateral crease line **533**. The day of opening reminder **531** includes a set of seven bendable tabs **563** with perforations **534**, or alternatively cuts, between each tab. Each bendable tab **563** has a separately curved top edge to further distinguish each bendable tab and to facilitate selection of a single bendable tab. A selected bendable tab **563** is bendable along the lateral crease line **533**. The selected bendable tab **563** is also bendable above the lateral crease line **533**. The sealing panel **532** prevents the contents of the container from coming out in spite of a tab being bent down.

Although the embodiments shown in FIGS. **1**-**2** and **4**-**5** shown the abbreviations for the days of the week on a spout side of the container **100**, in other embodiments (not shown), the abbreviations for the days of the week are on the side opposite the spout side, or are on both sides.

FIG. **6** is a perspective view of a flat-top paperboard-style container **600** (hereinafter "container **600**") in accordance with one embodiment of the invention. The container **600** includes a body that a general shape of a parallelepiped. In one embodiment, the body has a general shape of a rectangular cuboid. FIG. **6** shows the container **600** with a flat top **610**, a substantially flat bottom **640**, and four flat sides (only three of the four flat sides, main body panels **657**, **658** and **658**A, appear in FIG. **6**). The container **600** is a type of container that is widely used for packaging of edible liquids such as milk, dairy, dairy-substitutes, fruit juices, etc., that have a use-by date and do not need to be refrigerated until opened. The container **600** can also be used for packaging non-edible liquids and granular or pourable materials that have a use-by date. The container **600** is formed from a paperboard blank **700** (see FIG. **7**). The container **600** has a sealed flat top at a top of the container that keeps the container sealed until the contents of the container are ready for use. The sealed flat top is created by sealing panels **1***x*, **2***x*, **3***x*, **4***x*, **5***x*, **6***x*, **7***x* and **8***x* at the top of the container **600**. The flat top is provided with a day of opening reminder **631** in accordance with the invention. The day of opening reminder **631** includes a set of seven tabs **663** made of a same material as the container.

The day of opening reminder **631** includes lines of perforations **634**, or alternatively cuts, between each tab. The lines of perforations **634**, when selectively broken, allow any one of the seven tabs **663** to be moved into a different position relative to the other tabs, thereby conveying information about the day of week that the container **600** was first opened. Tab **638** is one tab among the plurality of tabs **663** which has been assigned a specific reference number for discussion purposes herein. Tab **638** is the second tab from the left in FIG. **6**, and has an "M" on it. As shown in FIG. **6**, tab **638** has been separated along the lines of perforations **634** or cuts between tab **638** and the tabs **663** on each side of tab **638**. In FIG. **6**, the second tab from the left, i.e., tab **638**, is shown in a bent up position from its original position. Advantageously, a user is able to manually bend up the tab **638** without bending up any of the other tabs **663**, and, in particular, without bending up the adjacent tabs **663**. As shown in FIG. **6**, the tab **663** with "SU" on it and the tab **663** with "T" on it remain in their original down positions. Advantageously, repositioning one tab (such as tab **638**) relative to the other tabs **663** does not affect the seal of the container **600**. The sealing panels **1***x*, **2***x*, **3***x*, **4***x*, **5***x*, **6***x*, **7***x* and **8***x* prevent the contents of the container **600** from coming out in spite of a tab, such as tab **638**, being bent up.

In one embodiment, the container **600** includes a snap cap **691** on a spout side of the container, as shown in FIG. **6**. The snap cap **691** is made of plastic or another suitable material. In such embodiment, the snap cap **691** can be opened and an internal safety seal removed so that the product can be poured out.

FIG. **7** is a plan view of one embodiment of a blank **700** of the container **600**. In one embodiment, the blank **700** comprises paper covered with a substance, such as wax or thermoplastic resin, to make the paper nearly leak-proof or completely leak-proof, and, in some case, also sterile. In other embodiments, the blank **700** is not made with paper but instead is made with other suitable materials such as plastic. The blank **700** is divided in conventional fashion by longitudinal crease, or fold, lines **650**-**654** into five main body panels **656**, **657**, **658**, **658**A and **659**. The blank **700** has a left edge **654**, a right edge **655**, and a flap **660** between seal line **650** and the right edge **655**. An adhesive is applied at the flap **660** to maintain the blank **700** in a form of the container **600** after the blank is folded into the shape of the container. Lateral fold lines **615**, **616**, **618**, **628** and **629** separate the main body panels **656**, **657**, **658**, **658**A and **659** from the top **610** of the blank **700**. Of course, the top **710** of the blank **700** becomes the top of the container **600**, after manufacture.

Still other lateral fold lines **642**, **643**, **643**A, **645** and **647** separate the main body panels **656**, **657**, **658**, **658**A and **659** from the bottom **640** of the blank **700**. Angular fold lines **644**,

646, 648 and 670 define exterior flaps of the bottom 640. The bottom 640 includes exterior flaps 662, 664 and 664A. The other lateral fold lines 642, 643, 643A, 645 and 647 separate the main body panels 656, 657, 658, 658A and 659 from the bottom 640 of the blank 700. Of course, the bottom 640 of the blank 700 becomes the bottom of the container 600, after manufacture. The bottom 640 includes exterior flaps 662, 664 and 664A.

The top 610 of the blank 700 includes portions of the blank that will form the flat top. The top 610 includes a rear top panel 607 and front top panels 609 and 609A directly above main body panels 656 and 658 and 658A, respectively. Above the main body panels 657 and 659 are triangular side flaps 614 and 613, respectively, each triangular side flap folds down and glues onto the main body panels 657 and 659 having two subordinate end panels on either side thereof. Above the array of top panels there are corresponding sealing panels that are divided by lateral score lines into upper sealing panels 1*x*-8*x*. In one embodiment, the top panel 609 includes a hole 690. The top 610 of the blank 700 includes portion(s) of the blank that will form the day of opening reminder 631 in accordance with the invention. The top 610 includes tab portions 630 and tab portions 633. In FIG. 7, the day of week indicators are shown on the tab portions 630 and partly on tab portion 630A. Referring now to FIGS. 6 and 7, the tabs 663 of the day of opening reminder 631 are formed when the tab portions 630 and the tab portions 633 are brought together. In other words, a single tab 663 is formed when a single tab portion 630 and a corresponding single tab portion 633 are brought together. The day of opening reminder 631 is made of a same material as the blank 700 and is an integral part of the blank.

FIGS. 8A, 8B and 8C are perspective views of a bottom portion of the container 600, at three successive stages of manufacture, in a manner well known, starting with FIG. 8A and ending with FIG. 8C.

FIGS. 9A, 9B and 9C are perspective views of a top portion of the container 600, at three successive stages of manufacture, in a manner well known, starting with FIG. 9A and ending with FIG. 9C. After the container 600 is filled with product, the triangular side panels 613 and 614 are folded downward over the side main body panels 657 and 659 of the container, and sealing panels 1*x*-8*x* come into contact with each other, and all of these upper sealing panels are adhered together to form a liquid-tight top closure for the filled container. When so adhered, sealing panels 1*x*-8*x* surmount the top of the container and form a narrow ridge, extending from one end to the other end of the apex of the flat top. In one embodiment, the top panel 609 includes the snap cap 691 which fits into the hole 690, as shown in FIG. 9A.

Each tab 663 of the day of opening reminder 631 includes a different marking, or symbol, that corresponds to a name of a day of the week. In one embodiment, such symbols are added to the tabs 663 of the day of opening reminder 631 when the container is in the form of the blank 700. In another embodiment, such symbols are added to the tabs 663 of the day of opening reminder 631 after the blank 700 is formed into the container 600. In still another embodiment, such symbols are added to the tabs 663 of the day of opening reminder 631 after container 600 is filled with product and sealed. In yet another embodiment, such symbols are added to the tabs 663 of the day of opening reminder 631 after container 600 is filled with product and sealed, and at a same time as the use-by date is added to the container.

In another embodiment (not shown), there are no perforations 134, 634 between the tabs 163, 663. In such other embodiment, the day of opening reminder 131, 631 includes other means to facilitate manual separation of a selected tab, such as tab 138, 638, from the other tabs 163, 663.

In yet another embodiment (not shown), there are no perforations 134, 634 between the tabs 163, 663, and the day of opening reminder 131, 631 does not include any means to facilitate manual separation of a selected tab (such as tab 138, 638) from the other tabs 163, 663. In such embodiment, reasonable manual force can nevertheless be used to separate a selected tab from the other tabs 163, 663.

In still other embodiments, the tabs are completely separated from each other at the time of manufacture, such as by cuts in the paperboard-like material between each tab. In one such embodiment, all seven tabs 163 remain upright until a user manually folds down, removes, or otherwise alters a selected tab. In another such embodiment, all seven tabs 663 remain down and flat against the top 610 of the container 600 until a user manually folds up, removes, or otherwise alters a selected tab.

In another embodiment (not shown), the tab material is not an integral part of the blank material, but is added to the container.

In another embodiment (not shown), a material of the tab is not a same material as a material of the blank, but is of a different material as the material of the blank. In such other embodiment, the container includes a sticker-type strip that includes the day of opening reminder 131, 631. In such other embodiment, the sticker-type strip is made of a material different from the material of the blank 200, 700. In such other embodiment, the sticker-type strip is attached to the material of the blank 200, 700 (and, consequently, is attached to the container 100, 600).

In another embodiment (not shown), the tabs are formed after the blank is folded into a container.

In another embodiment (not shown), the tabs are formed after the container is filled with product and sealed.

In another embodiment (not shown), each tab has a line of perforations defining a perimeter within the tab to facilitate the punching out of, or otherwise removing, the area of the tab within the perimeter, by a user to indicate the day that the container was first opened.

In another embodiment (not shown), the day of opening reminder includes means for completely removing a selected tab from the container. In such other embodiment, the means may include additional perforations at the bottom of each tab.

In another embodiment (not shown), the container has fewer than seven tabs.

In another embodiment (not shown), the container has more than seven tabs. In one such embodiment, the container has eight (8) tabs including seven (7) daily tabs and one (1) additional tab, such that the condition, or position, of the additional tab indicates that the container has been open for more than one week (in other words, was opened more than one week ago).

The terms "a" or "an," as used herein, are defined as one or more than one. Also, the use of introductory phrases such as "at least one" and "one or more" in the claims should not be construed to imply that the introduction of another claim element by the indefinite articles "a" or "an" limits any particular claim containing such introduced claim element to inventions containing only one such element, even when the same claim includes the introductory phrases "one or more" or "at least one" and indefinite articles such as "a" or "an." The same holds true for the use of definite articles.

Unless stated otherwise, terms such as "first" and "second" are used to arbitrarily distinguish between the elements such terms describe. Thus, these terms are not necessarily intended to indicate temporal or other prioritization of such elements.

The specification and figures are to be regarded in an illustrative rather than a restrictive sense, and all such modifications are intended to be included within the scope of the present invention. Any benefits, advantages or solutions to problems described herein with regard to specific embodiments are not intended to be construed as a critical, required or essential feature or element of any or all the claims.

The Detailed Description section, and not the Abstract section, is intended to be used to interpret the claims. The Abstract section may set forth one or more but not all embodiments of the invention, and the Abstract section is not intended to limit the invention or the claims in any way.

Although the invention is described herein with reference to specific embodiments, various modifications and changes can be made without departing from the scope of the present invention as set forth in the claims below.

What is claimed is:

1. A gable-top container for holding a pourable product, comprising:

a piece of material with a plurality of cutouts, fold lines and perforations for forming a sealable container when folded to include

a rectangular body,

a substantially flat bottom, and

a substantially gable top having a top edge, the substantially gable top including a series of bendable tabs disposed at the top edge and lines of perforations in the material, each line of perforations defining a boundary between adjacent bendable tabs, wherein the bendable tabs are directly adjacent to each other and are only separated by a line of perforations,

wherein the gable-top container remains sealed after one, some or all of the bendable tabs are bent.

2. The gable-top container of claim **1**, wherein the series of bendable tabs includes at least seven bendable tabs.

3. The gable-top container of claim **2**, wherein each of the at least seven bendable tabs includes a marking on the bendable tab denoting a day of a week selected from a group of days of a week, Sunday, Monday, Tuesday, Wednesday, Thursday, Friday and Saturday.

4. The gable-top container of claim **3**, wherein the marking is an abbreviation for a day of the week.

5. The gable-top container of claim **1**, wherein the piece of material is paperboard material.

6. The gable-top container of claim **1**, wherein the material is a plastic material.

7. The gable-top container of claim **1**, further including a circular spout with a removable cap formed in the gable top.

8. A blank for forming the gable-top container described in claim **1**.

9. A container for holding a pourable product, comprising:

a piece of material with a plurality of cutouts, fold lines and perforations for forming a sealable container when folded to include

a body,

a substantially flat bottom,

a top including a top sealing panel, and

a plurality of bendable tabs disposed entirely above the top sealing panel, wherein the bendable tabs are directly adjacent to each other and are only separated by a line of perforations,

wherein the container remains sealed after one, some or all of the bendable tabs are bent.

10. The container of claim **9**, wherein the plurality of bendable tabs includes seven bendable tabs, and wherein each of the seven bendable tabs includes a marking on the bendable tab denoting a day of a week selected from a group of days of a week, Sunday, Monday, Tuesday, Wednesday, Thursday, Friday and Saturday.

11. The container of claim **9**, wherein the material is paperboard.

12. The container of claim **9**, further including a spout formed at a top of the container.

13. A blank for forming the container described in claim **9**.

14. A container for holding a pourable product, comprising:

a piece of material with a plurality of cutouts, fold lines and perforations for forming a sealable container when folded to include

a body,

a bottom,

a top including a top sealing panel, and

a plurality of tabs disposed above the top sealing panel, wherein the tabs are directly adjacent to each other and are only separated by perforations,

wherein the container remains sealed after one, some or all of the tabs are bent or removed.

15. The container of claim **14**, wherein the plurality of tabs includes at least seven tabs.

16. The container of claim **15**, wherein each of the seven tabs includes a marking denoting a day of a week selected from a group of days of a week, Sunday, Monday, Tuesday, Wednesday, Thursday, Friday and Saturday.

17. The container of claim **14**, wherein the material is paperboard.

18. The container of claim **14**, wherein the material is a plastic material.

19. The container of claim **14**, further including a spout with an adjoined snap cap formed in the flat top.

20. A blank for forming the container described in claim **14**.

* * * * *