US009472791B2

(12) **United States Patent**
Ojeda et al.

(10) **Patent No.: US 9,472,791 B2**
(45) **Date of Patent: Oct. 18, 2016**

(54) **BATTERY SYSTEM, HOUSING AND VEHICLE INCLUDING BATTERY SYSTEM**

(75) Inventors: **Peter A. Ojeda**, Plymouth, MI (US); **Michael W. Leonard**, Plymouth, MI (US); **Jason Gamache**, Romeo, MI (US)

(73) Assignee: **Johnson Controls Technology Company**, Holland, MI (US)

(*) Notice: Subject to any disclaimer, the term of this patent is extended or adjusted under 35 U.S.C. 154(b) by 351 days.

(21) Appl. No.: **13/571,220**

(22) Filed: **Aug. 9, 2012**

(65) **Prior Publication Data**

US 2013/0037336 A1 Feb. 14, 2013

Related U.S. Application Data

(60) Provisional application No. 61/522,497, filed on Aug. 11, 2011.

(51) **Int. Cl.**

B60K 1/04	(2006.01)
H01M 2/10	(2006.01)
H01M 10/42	(2006.01)

(52) **U.S. Cl.**

CPC ***H01M 2/1077*** (2013.01); ***B60K 1/04*** (2013.01); ***H01M 2/1083*** (2013.01); ***H01M 10/425*** (2013.01); *B60K 2001/0422* (2013.01); *B60K 2001/0466* (2013.01); *B60Y 2200/23* (2013.01)

(58) **Field of Classification Search**

CPC B60K 1/04; B60K 2001/005; B60K 2001/0422; B60K 2001/0466; H01M 2/1077; H01M 2/1083

USPC 180/68.5; 429/99, 100, 148

See application file for complete search history.

(56) **References Cited**

U.S. PATENT DOCUMENTS

5,378,555	A *	1/1995	Waters et al.	429/97
5,392,873	A *	2/1995	Masuyama et al.	180/68.5
5,534,364	A *	7/1996	Watanabe et al.	429/61
6,213,145	B1	4/2001	Crook et al.	
6,340,538	B1 *	1/2002	King	429/96
6,662,891	B2 *	12/2003	Misu et al.	180/68.1
8,051,934	B2 *	11/2011	Kiya et al.	180/68.5
8,256,552	B2 *	9/2012	Okada	180/68.5

(Continued)

FOREIGN PATENT DOCUMENTS

EP	2187465	5/2010
EP	2202824	6/2010

(Continued)

OTHER PUBLICATIONS

International Search Report and Written Opinion of the International Searching Authority dated Mar. 14, 2013, for International Application No. PCT/US2012/050397.

Primary Examiner — Katy M Ebner

(74) *Attorney, Agent, or Firm* — Boardman & Clark LLP

(57) **ABSTRACT**

A battery system for use in a vehicle is disclosed. The battery system includes a tray having a plurality of battery receptacles. A plurality of batteries are also provided, each battery in the plurality of batteries being received in a battery receptacle. A conductive layer in electrical communication with the plurality of batteries and a terminal for electrically coupling to a vehicle are also provided in the battery system. A cover interlocks with the tray. The cover carries a computer and a diagnostic identification system for the plurality of batteries. A housing for a battery system and a vehicle including a battery system are also disclosed.

16 Claims, 9 Drawing Sheets

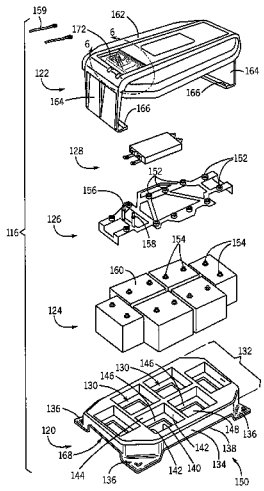

(56) **References Cited**

U.S. PATENT DOCUMENTS

8,561,743	B2 *	10/2013	Iwasa et al.	180/68.5
2001/0046624	A1 *	11/2001	Goto	H01M 2/105 429/99
2003/0047366	A1 *	3/2003	Andrew et al.	180/68.5
2007/0284167	A1 *	12/2007	Watanabe et al.	180/68.5
2009/0017368	A1 *	1/2009	Hayashi et al.	429/100
2009/0274952	A1 *	11/2009	Wood et al.	429/99
2010/0136413	A1	6/2010	Hermann et al.	

FOREIGN PATENT DOCUMENTS

JP	2004345448 A	*	12/2004	B60K 1/04
WO	WO 2010/019764		2/2010	

* cited by examiner

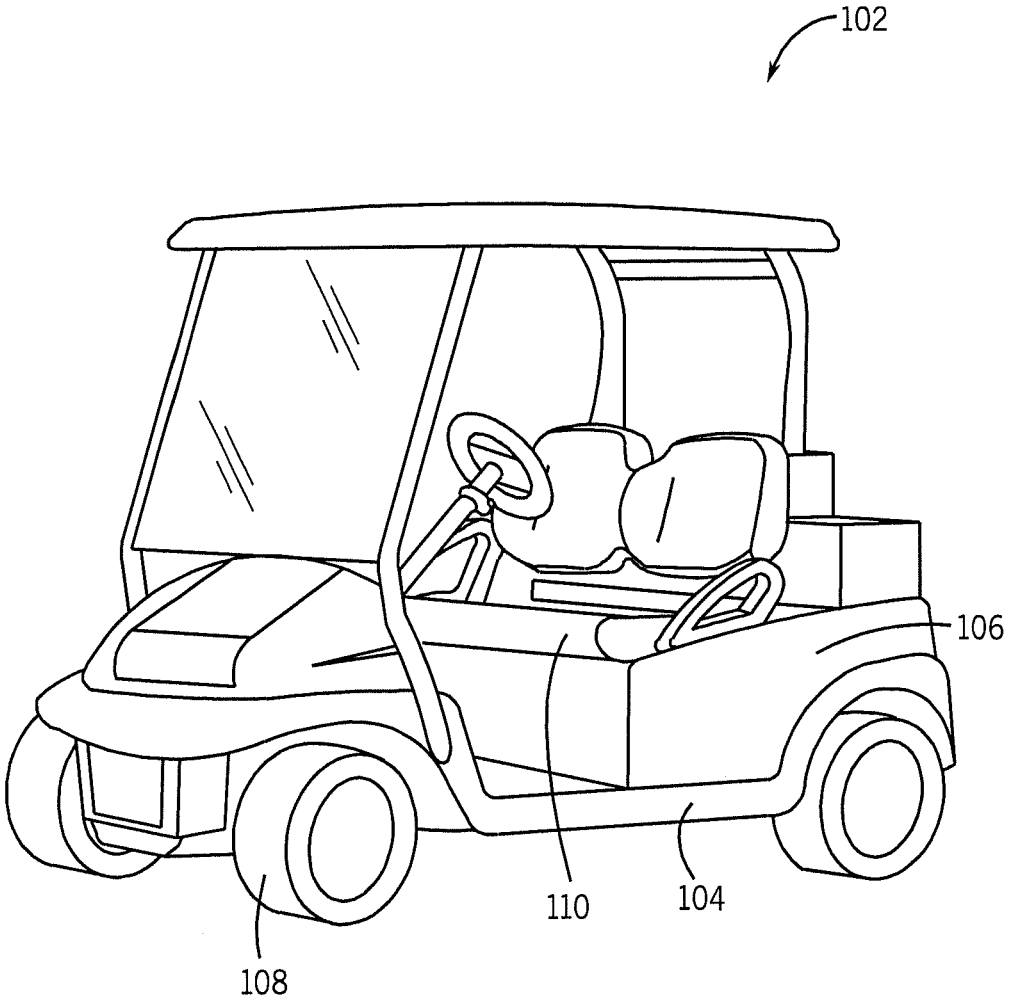

FIG. 1

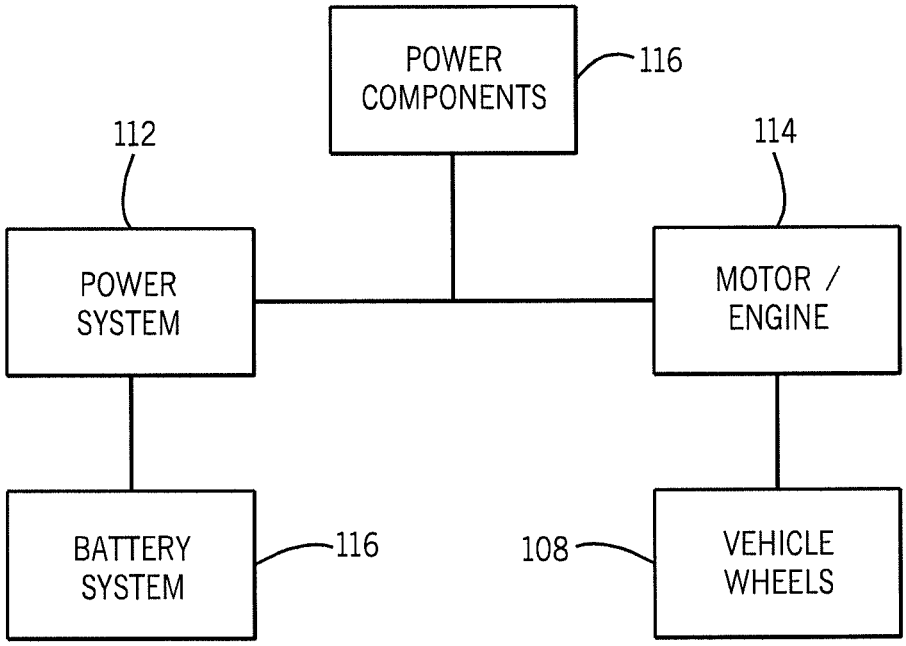
POWER COMPONENTS
116
112
114
POWER SYSTEM
MOTOR / ENGINE
BATTERY SYSTEM
116
108
VEHICLE WHEELS

FIG. 2

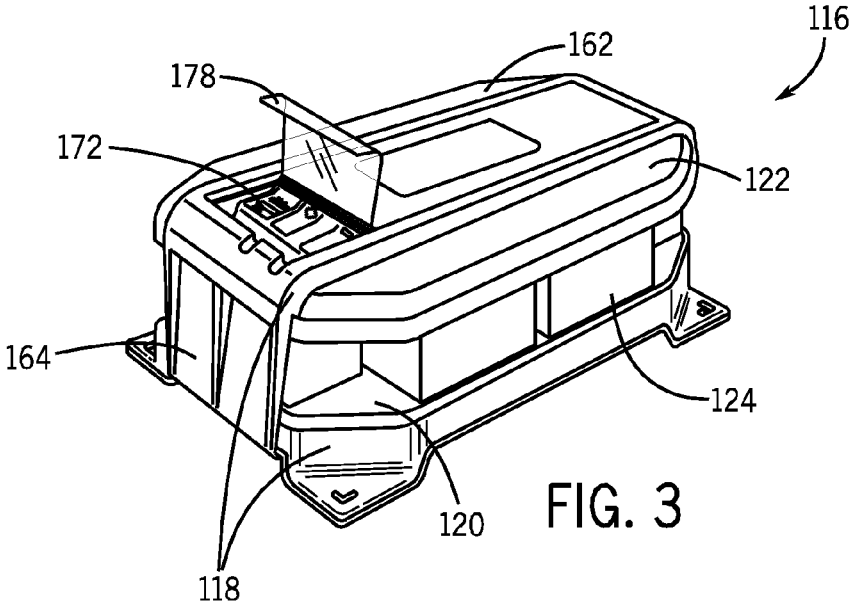
116
162
178
172
122
164
124
120
118

FIG. 3

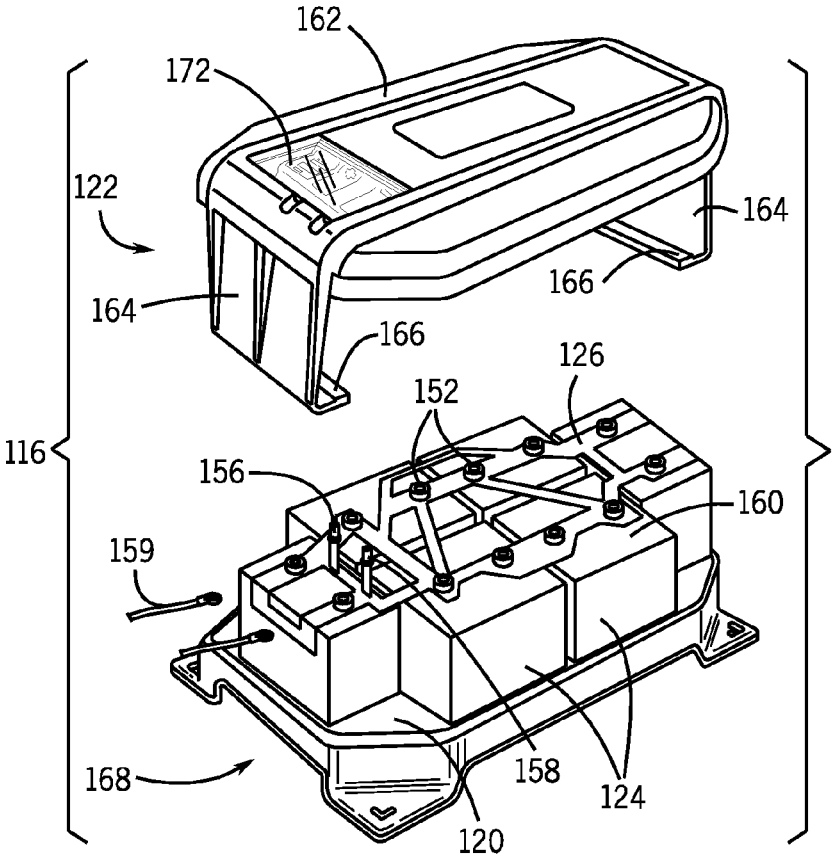
162
172
122
164
166
164
166
126
152
116
156
160
159
168
158
124
120

FIG. 4

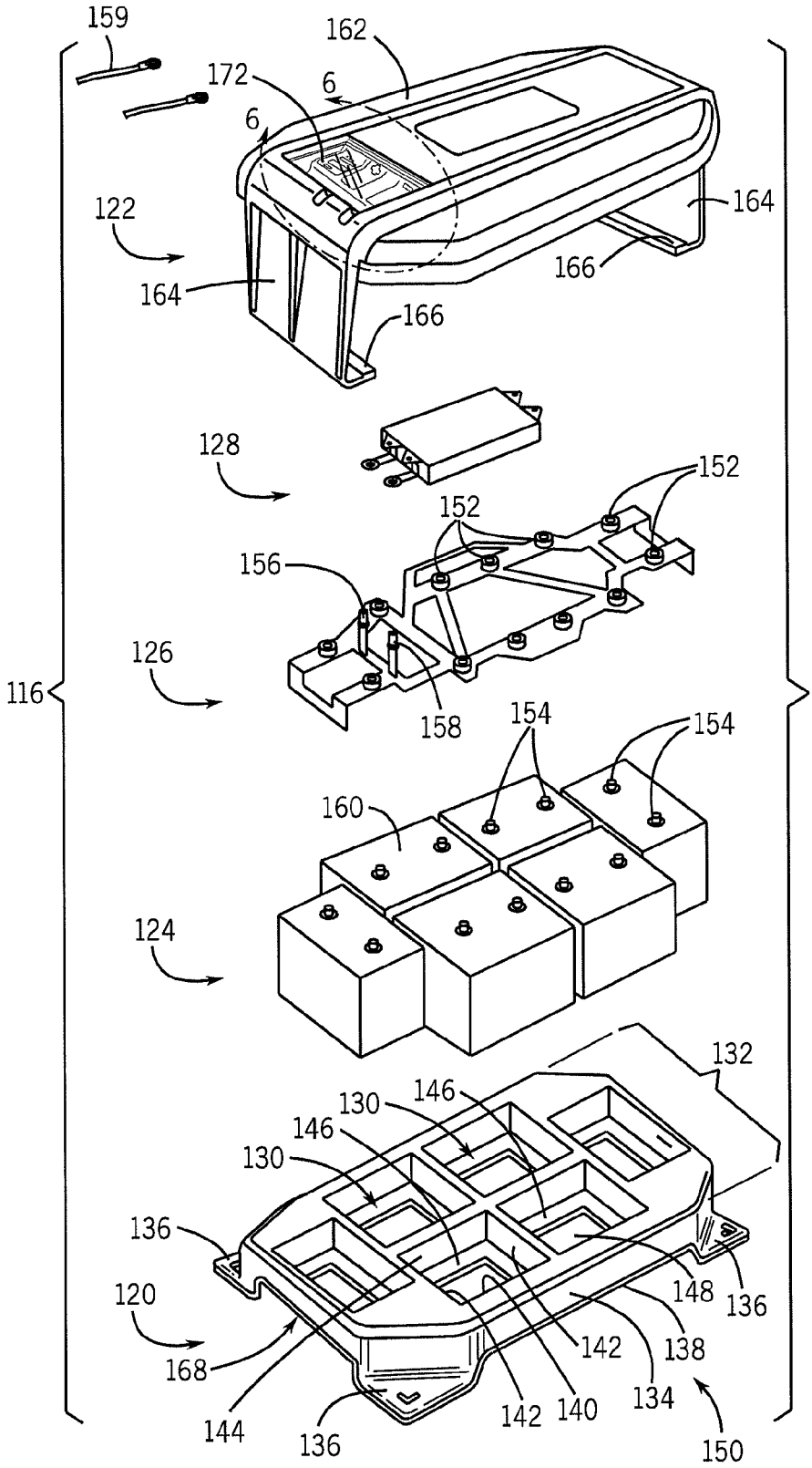
159
162
172
6
6
122
164
164
166
166
128
152
152
156
126
116
158
154
154
160
124
132
130
146
146
130
136
120
168
144
136
142
140
142
138
134
148
136
150

FIG. 5

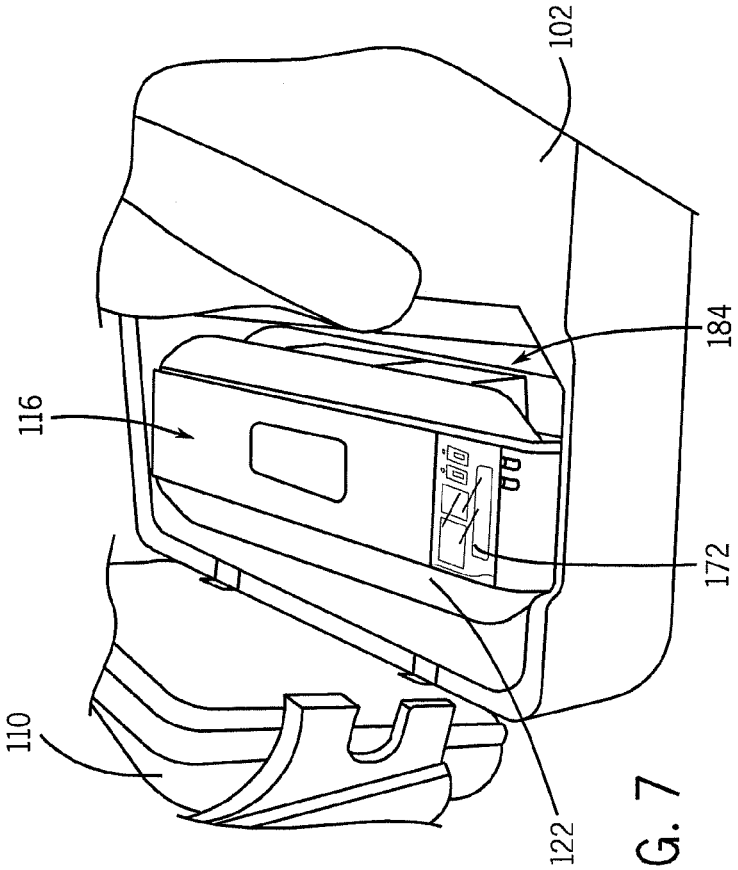

FIG. 7

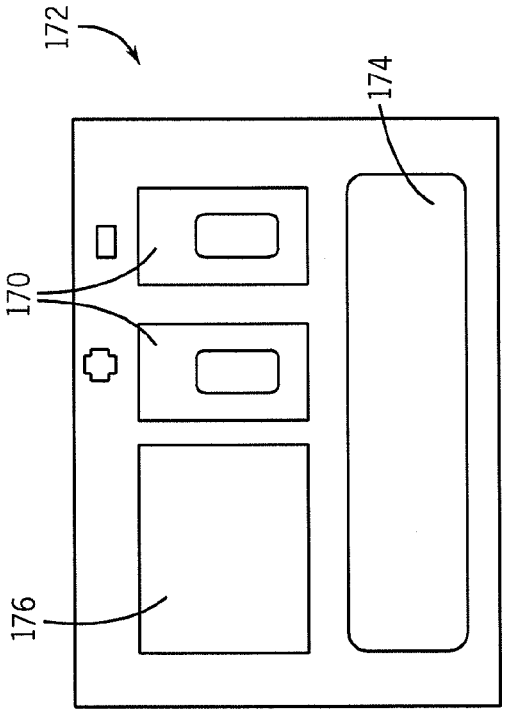

FIG. 6

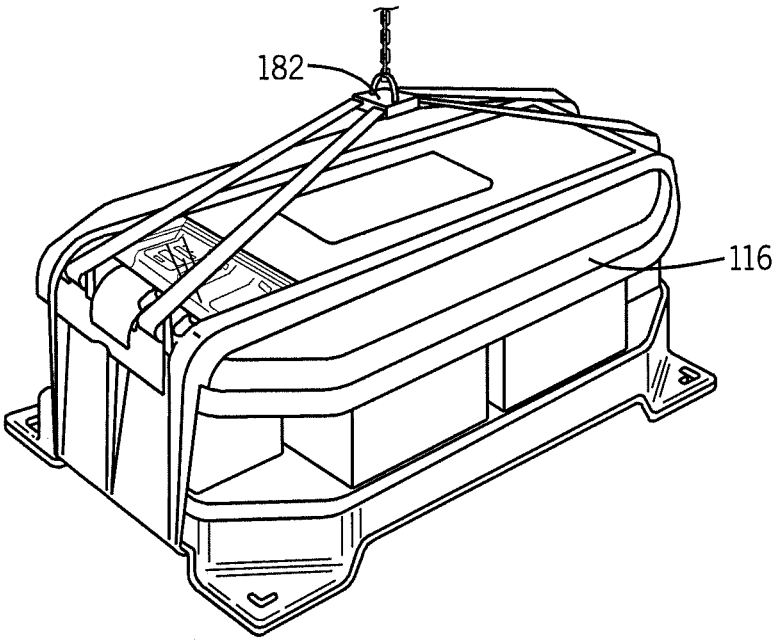

FIG. 8

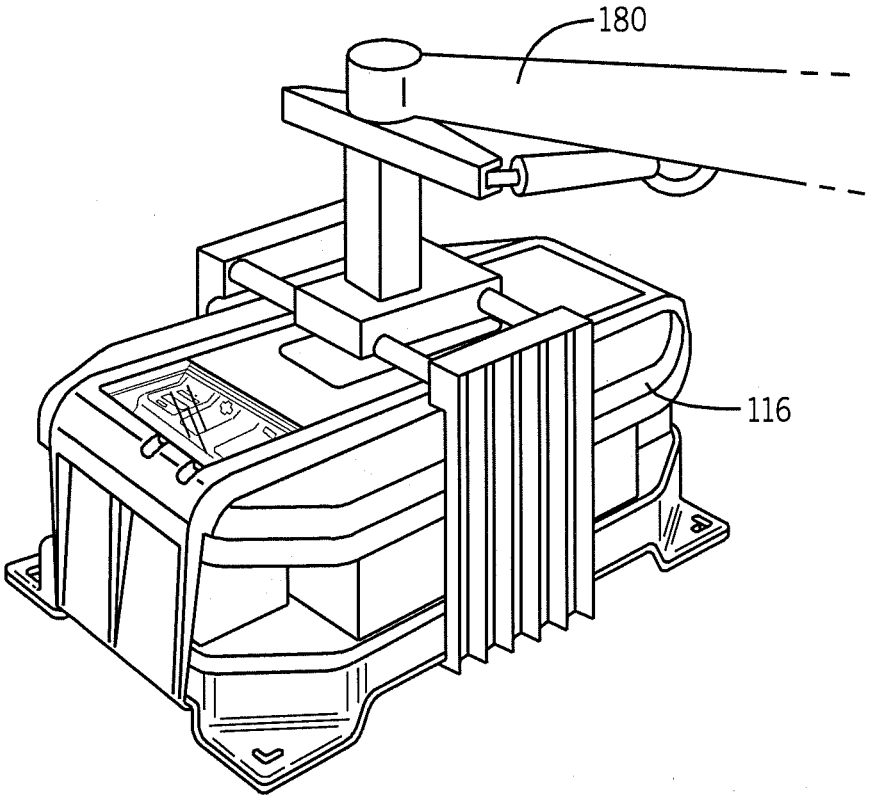

FIG. 9

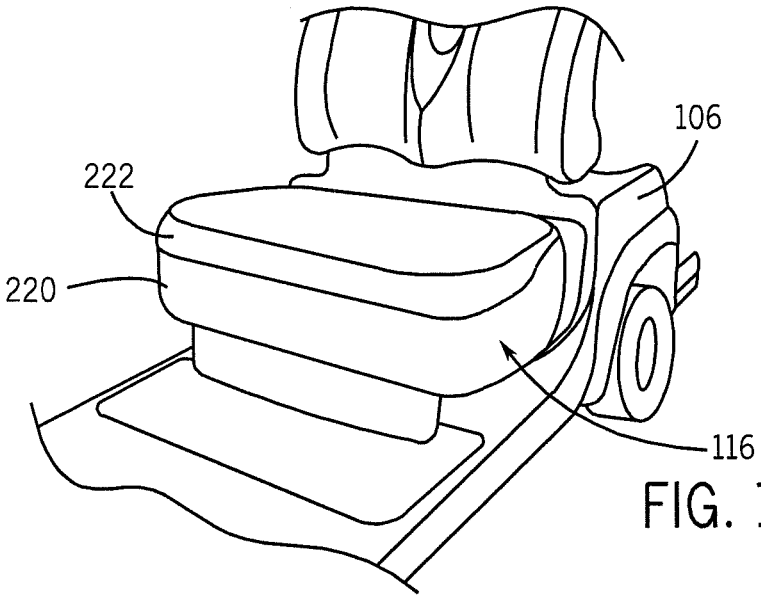

FIG. 10

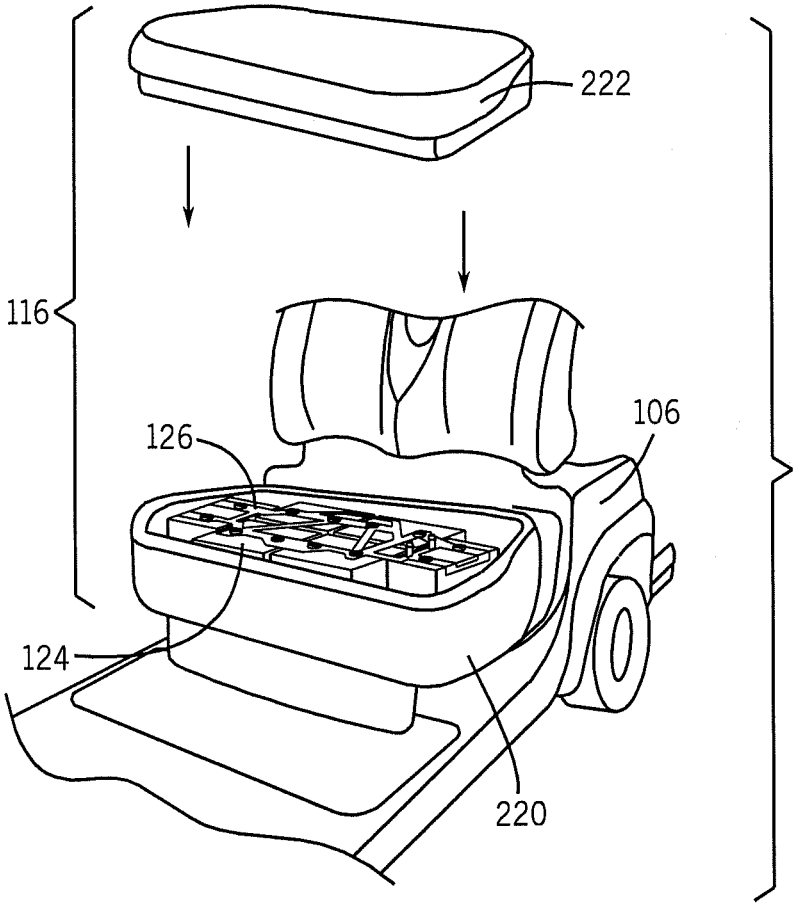

FIG. 11

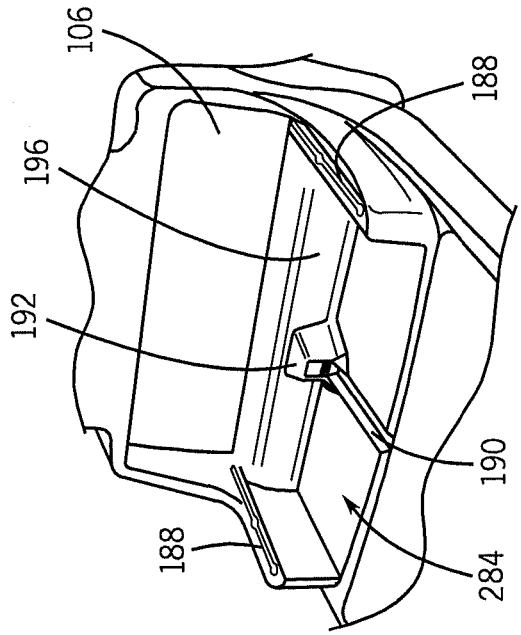

FIG. 13

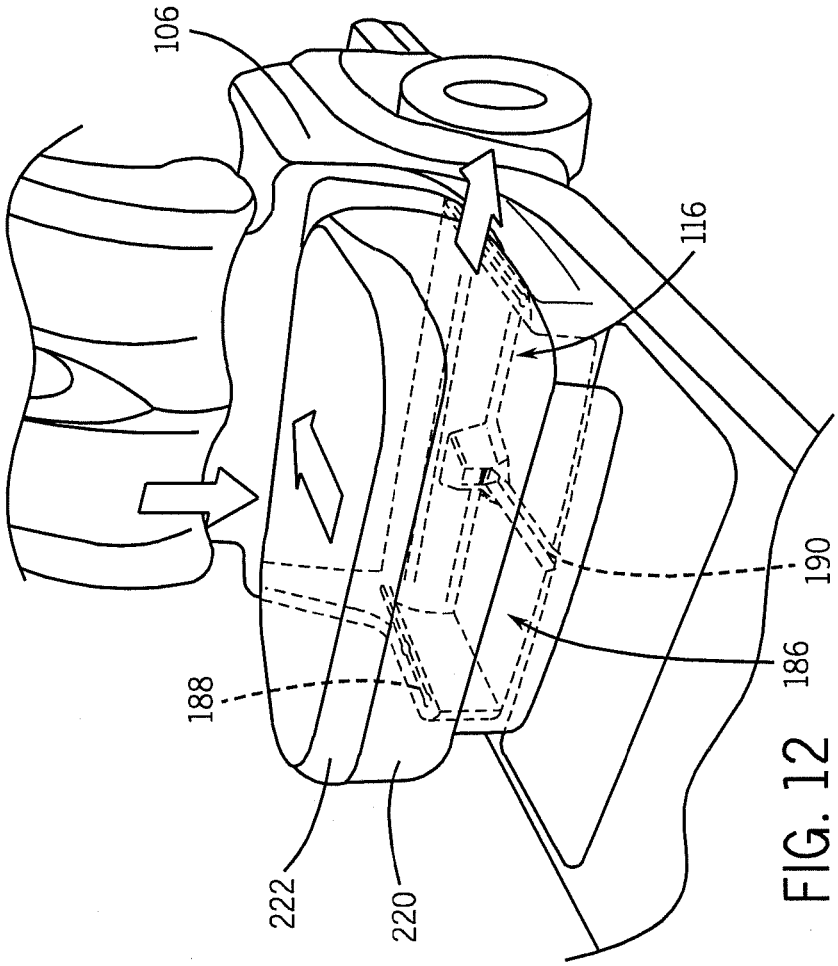

FIG. 12

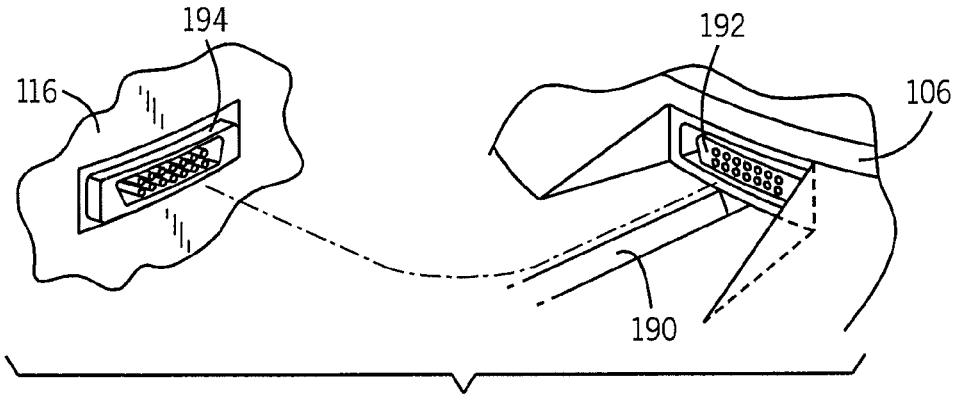
194
192
116
106
190

FIG. 14

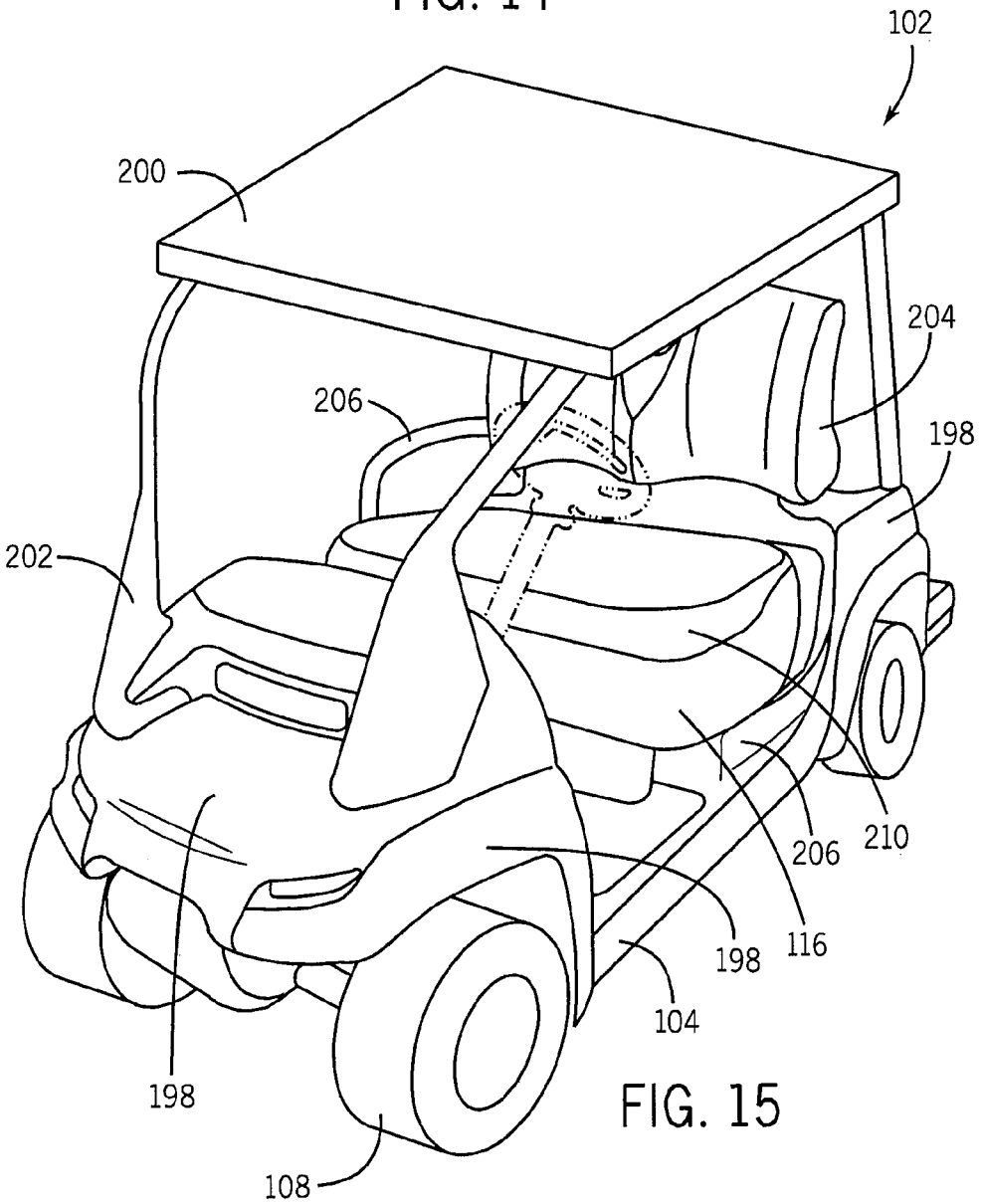
102
200
204
206
198
202
206
210
198
116
104
198
108

FIG. 15

BATTERY SYSTEM, HOUSING AND VEHICLE INCLUDING BATTERY SYSTEM

CROSS-REFERENCE TO RELATED APPLICATIONS

The present application claims priority to U.S. Provisional Patent Application, Ser. No. 61/522,497, filed Aug. 11, 2011, entitled "Battery System," the contents of which is incorporated herein by reference in its entirety.

FIELD

The present inventions relate to vehicles such as golf cars or carts, utility vehicles and neighborhood electric vehicles. The present inventions more specifically relate to battery systems, housings for battery systems and bodies for such vehicles.

BACKGROUND

Vehicles such as golf cars and carts typically include a frame, a body mounted to the frame, three or four wheels rotatably connected with the frame and a power system operably connected with a wheel drive assembly. Power systems for these vehicles include an electric motor, and one or more batteries, and other electrical components. The batteries may alternatively be coupled to an internal combustion engine.

Power systems common to electric motor powered vehicles, such as a golf car or cart, commonly include multiple batteries that are individually installed and connected in series by a variety of cables. These batteries are individually retained in place with individual battery hold downs that removably attach the battery to the frame of the vehicle. It is also known to provide the individual batteries underneath the seat of such vehicles. Unfortunately, these battery systems are difficult to install and/or replace as individual batteries must be separately installed and electrically connected below the seat, and include multiple parts for installation. Further, such batteries are typically delivered for installation with no electrolyte. As a result, before the batteries are usable, the vent caps must be removed from each battery and each battery filled with fluid. Likewise, ongoing maintenance of the batteries requires each individual battery to be separately filled with electrolyte or other fluid.

SUMMARY

Accordingly, a battery system for use in a vehicle is provided. The battery system includes a tray having a plurality of battery receptacles. A plurality of batteries are also provided, each battery in the plurality of batteries being received in a battery receptacle. A conductive layer in electrical communication with the plurality of batteries and a terminal for electrically coupling to a vehicle are also provided in the battery system. A cover interlocks with the tray. The cover carries a computer and a diagnostic identification system for the plurality of batteries.

A housing for a battery system is also provided. The housing includes a tray having a plurality of receptacles sized to carry batteries, an elevated floor providing an area of clearance below the floor, and apertures in the receptacles in communication with the area of clearance. A cover interlocks with the tray. The cover has a leg which extends and couples to the tray.

A vehicle is also provided. The vehicle has a power system coupled to driven wheels and a battery system docking area. The battery docking area has a drawer to rack system. A battery system is provided which is movable on the drawer to rack system into and out of the docking area. A self-docking plug-in system defined by an electrical coupling of the battery system and the power system is also provided.

These and other features and advantages of devices, systems, and methods according to this invention are described in, or are apparent from, the following detailed descriptions of various examples of embodiments.

BRIEF DESCRIPTION OF DRAWINGS

Various examples of embodiments of the systems, devices, and methods according to this invention will be described in detail, with reference to the following figures, wherein:

FIG. **1** is a perspective view of an example vehicle for use with one or more examples of embodiments of the battery system described herein;

FIG. **2** shows a representation of one or more examples of a power system;

FIG. **3** is a perspective view of a battery system according to one or more examples of embodiments;

FIG. **4** is a partial exploded perspective view of the battery system shown in FIG. **3**, showing vehicle electrical coupling elements, batteries, and the housing of the battery system according to one or more examples of embodiments;

FIG. **5** is an exploded perspective view of the battery system shown in FIGS. **3**-**4**;

FIG. **6** is a top elevation view of the battery system shown in FIG. **3**, taken from line **6**-**6** of FIG. **4**, showing one or more examples of a control system;

FIG. **7** is a partial perspective view of the vehicle shown in FIG. **1**, showing a battery system of FIG. **3** installed in the vehicle;

FIG. **8** is a perspective view of the battery system shown in FIG. **3**, showing the battery system connected to a lift;

FIG. **9** is a perspective view of the battery system shown in FIG. **3**, showing the battery system connected to a hoist;

FIG. **10** is a partial perspective view of one or more alternative examples of embodiments of the battery system described herein, showing a vehicle including a battery system housing with seat;

FIG. **11** is a partial exploded perspective view of the vehicle and battery system housing shown in FIG. **10**, showing the seat and battery system cover separated;

FIG. **12** is a partial perspective view of one or more alternative examples of a vehicle and battery system, showing one or more examples of a coupling of the battery system to one or more components of a vehicle;

FIG. **13** is a partial perspective view of the vehicle shown in FIG. **12**, showing one or more examples of embodiments of rails configured to help couple a battery system housing with seat into a vehicle;

FIG. **14** is a partial perspective view of the vehicle shown in FIG. **12**, showing one or more examples of a coupling system for coupling the battery system to the vehicle;

FIG. **15** is a partial perspective view of one or more alternative examples of a vehicle and battery system as described herein.

It should be understood that the drawings are not necessarily to scale. In certain instances, details that are not necessary to the understanding of the invention or render other details difficult to perceive may have been omitted. It

should be understood, of course, that the invention is not necessarily limited to the particular embodiments illustrated herein.

DETAILED DESCRIPTION

A vehicle **102** is shown in FIG. **1**. The vehicle **102** may include a battery system according to one or more examples of embodiments. The vehicle **102** in the illustrated examples is a golf car or cart. However, according to various alternative examples of embodiments, the vehicle **102** may be any variety of types of vehicles including, among others, utility vehicles, all terrain vehicles, neighborhood electric vehicles, and recreational vehicles. The vehicle **102** may also be other vehicles utilizing multiple batteries. According to one or more examples of embodiments, the vehicle **102** uses one or more electric motors for locomotive purposes. However, use of the battery system in combination with an internal combustion engine is also contemplated.

Generally, the vehicle **102** is formed of a frame **104**, a body **106** coupled or mounted to the frame, a plurality of wheels **108** rotatably connected with the frame, and a power system operably connected with a wheel drive assembly to drive one or more wheels **108** from the plurality of wheels. The vehicle **102** includes a seat **110** or seating system. The seating system **110** may be integral or otherwise attached to the body **106**, or it may be configured to be removably coupled to the body. Referring to FIG. **2**, the power system **112** generally includes a motor **114** (such as an electric motor), power components **116** necessary to operate the motor and/or vehicle, and a battery system **116**. As indicated, the power system **112** may also include an internal combustion engine. One or more components of the power system **112** may be coupled or mounted to the frame **104** and/or the body **106** of the vehicle **102**.

A battery system **116** for use with the vehicle **102** and/or power system **112** is shown in FIGS. **3-15**. According to one or more examples of embodiments, the battery system **116** generally includes a housing **118** formed of tray **120** or framework or base and a cover **122**, a plurality of batteries **124**, and conductive layer or wiring or a wiring harness **126**. In various embodiments, the battery system **116** may also be coupled to a computer **128**.

As shown in FIGS. **3-5**, a battery system **116**, and in particular the housing **118**, includes a base, which may be a tray or framework **120**. The tray **120** is arranged to position and/or secure one or more of the batteries **124** of the battery system **116** during shipping, installation, and/or use.

In the illustrated example shown in FIG. **5**, the base or tray **120** has multiple cavities or receptacles or compartments **130** configured for positioning multiple batteries **124**. Six cavities **130** are shown in FIG. **4**. The cavities **130** are shown as two rows of two, bookended with a single cavity on each side. The cavities **130** form a battery support area **132** on the tray **120** for carrying or supporting the batteries **124**. The cavities **130** are surrounded by a frame **134**. The frame **134** may also include one or more legs **136** or feet or other features which raise the floor **138** of the tray **120** above the supporting surface, providing space **150** below. Further, or in the alternative, clearance or space or apertures may be provided on the lower edge of the frame **134** between the floor **138** and the supporting surface.

In one or more examples of embodiments, each cavity **130** or receptacle has a front wall **140**, end walls **142**, a rear wall **144**, and a bottom wall **146**. The bottom wall **146** may be provided at the bottom edge of the front, and in rear walls. In other various embodiments, the bottom wall **146** may be provided away from the bottom edge of the front wall **140**, end walls **142**, and/or rear wall **144**, for instance, to allow air to pass below the battery **124**. As shown in FIG. **5**, one or more of the cavities **130** or receptacles may have an aperture **148**, such as for example a partially opened bottom wall, which exposes the bottom of a battery held in the cavity **130**. The apertures **148** may be in direct communication with the space **150** below the floor **138** of the tray **120**.

While the cavities **130** or receptacles are shown in FIG. **5** in a particular configuration, it should be appreciated that the cavities **130** may be provided or configured in any suitable configuration. For example, while six cavities **130** are shown in FIG. **5**, the base or tray **120** may include any number of cavities. Further, while the cavities **130** in FIG. **5** are shown as two rows of two, bookended with a single cavity on each side, other configurations may be utilized (e.g., a two-by-three configuration or two-by-two bookended one each side by an offset cavity). Likewise, while apertures **148** are illustrated in the cavities **130**, the cavities may be provided without apertures or openings, or the aperture may be located in other locations within the cavity or receptacle.

In various embodiments, the base, tray or framework **120** is integrally formed or connected (e.g. of one-piece construction). However, it should be appreciated that the base, tray or framework **120** may include separate pieces coupled together (e.g., by brackets, fasteners, plastic fusion, or other now known or future developed means).

One or more batteries **124** may be received in the base or tray **120** in the various receptacles **130**. The batteries **124** may be provided in the base or tray **120** in any suitable configuration. The batteries **124** shown in FIGS. **3-5** may include any type of secondary battery (e.g., rechargeable battery). According to one or more examples of embodiments, the batteries **124** include a lead-acid storage battery. Lead-acid storage batteries may be either sealed (e.g., non-maintenance) or unsealed (e.g., wet). According to one or more examples of embodiments, the lead-acid storage battery is an unsealed lead-acid battery that periodically requires the addition of electrolyte and/or water to maintain a desired volume and/or concentration of either or both. Each battery **124** includes a positive and a negative terminal for electrically coupling the battery to another device. FIGS. **4-5** show six unsealed 8-volt batteries. However, the type, number and voltage of the batteries **124** may vary according to the intended use or requirements.

In various examples of embodiments, the battery system **116** includes a conductive layer, wiring harness or wiring **126** for electrically coupling the batteries **124** together and/or to the vehicle **102** (see FIGS. **4-5**). The conductive layer **126** is in electrical communication with a plurality of batteries **124** and the power system **112** or vehicle **102**. In one example, the batteries **124** are coupled in series, although alternative arrangements suitable for the purposes of the battery system **116** may also be acceptable. The conductive layer or wiring harness **126** may be a single or one-piece wiring harness, wherein the wiring includes connectors **152** or other members for coupling the positive and negative terminals **154** of the batteries **124** to the wiring **126**. The coupling elements **152**, as well as the wire or cable **126**, are formed of or include conductive material for transmission of current. The coupling elements **152** may be arranged or shaped to be received on a battery terminal **154** and are spaced along the wiring harness **126** so as to be positioned over a battery terminal from a battery **124** carried by the tray **120**. Accordingly, the wiring harness **126** has a plurality of coupling elements **152** interspersed on the cable or wire or conductive layer **126**, and connected for the desired battery

configuration, e.g., in series. As a result, the wiring harness **126** makes all the necessary electrical contacts with the battery or plurality of batteries **124**. In various examples of embodiments, the wiring **126** also includes a positive terminal **156** and a negative terminal **158**, or more than one such terminal. The positive and negative terminals **156**, **158** may be arranged to be accessible from the exterior of the battery system **116**, or for example from the battery cover **122**. In one or more examples of embodiments, the cover provides electrical access to the terminals **156**, **158**, either providing physical access to the terminals, or by providing a separate terminal or terminals in electrical communication with the conductive layer terminals **156**, **158**. Terminals **156**, **158** may be coupled to the power system terminal cables **159** directly or indirectly via electrical connection with conductive elements in the cover. While the wiring **126** is shown in FIGS. **4-5** as being a single or one-piece wiring harness, it should be appreciated that the wiring or conductive layer **126** may include any number of components, segments, or pieces.

The wiring harness or conductive layer **126** may also be linked or coupled to a computer **128** (FIG. **5**), such as, in one example, an on-board computer. For instance, a positive terminal **156** and a negative terminal **158** of the wiring **126** may be coupled to one or more computers **126**. One or more examples of a computer **128** are shown in FIG. **5**. The computer **128** may be carried by the cover **122** of the battery system **116**, or may alternatively be carried by the tray **120**. For example, the top portion **162** of the cover **122** may carry an on-board computer **128**. The computer **128** may be any suitable computer, including for example, an on-board computer, an on-board battery charger computer, a controller, a solenoid, and/or other electrical components. As one of ordinary skill in the art will appreciate, however, the batteries **124** or wiring **126** do not need to be coupled to an on-board computer **128**. Further, it should be appreciated that the batteries **124** may be coupled to a computer **128** which is not provided within the battery system housing **118**. The computer **128** may be provided for any suitable purpose, including, but not limited to, the following: monitoring the service and condition of batteries **124**, providing data on use; controlling the battery system **116** and/or power distribution; controlling on/off; and/or controlling the battery system display.

As shown in FIG. **3-5**, in one or more examples of embodiments the battery system **116** also includes a cover **122**. The cover **122** may be disposed on the batteries **124**. The cover **122** encloses or covers the batteries **124** carried by the tray **120**. In the illustrated example, the cover **122** extends over the top surface **160** of the batteries **124**. The cover **122** may be releasably or hingedly or pivotably coupled to the base or tray **120** of the system. The cover **122** is formed of a top portion **162** and one or more legs **164** extending therefrom. In the illustrated example, legs **164** extend below the top portion **162** of the cover **122** from positions proximate to the ends of the top portion **162**. The leg or plurality of legs **164** space the cover **122** a distance away from the tray **120**. Preferably, the distance corresponds to, at least, the height of the batteries **124** carried by the tray **120**. Each leg **164** may include a flange **166** or other interlocking member which couples to, or is supported on or near, the base or tray **120**. The flange **166** or leg **164** may couple to the tray **120** on one or more surfaces, such as a side surface, and may further couple in a corresponding receptor **168**. For example, a leg **164** may interlock with the tray **120** by a snap-fit or friction-fit type arrangement, or in the alternative may interlock via a tongue and groove type arrangement.

The cover **122** may also optionally include or be associated with a fluid delivery system. The fluid delivery system may be utilized to provide fluid, such as water or electrolyte, to one of the batteries **124** or multiple batteries, simultaneously or in sequence. As a result, a one-step fluid fill and flood system may be provided in association with or in connection with the cover **122**. To this end, a fluid port or receptacle, along with a delivery system connected with or connectable to the various batteries **124** in the battery system **116** may also optionally be provided in association with the cover **122**. Further, this system may be arranged to provide a one-step fill system with overflow. The cover **122** may also include vent caps (not shown), such as vent caps integral to the cover **122**. In various alternative examples of embodiments, however, the vent caps may be provided separately from the cover **122**, such as for example by use of single or gang vents.

The cover **122** may provide access to the terminals **156**, **158** of the wiring or wiring harness **126**. To this end, access openings **170** may be provided in the cover **122**. In FIGS. **3-6**, access openings **170** are provided in the top portion **162** of the cover **122**. In various alternative examples of embodiments, the cover **122** includes terminals that are electrically coupled to the wiring harness **126** and/or terminals of the wiring harness. As a result, a quick-connect coupling mechanism may be provided for coupling to the vehicle positive and negative terminal wiring.

Accordingly, as shown in FIGS. **6-7**, a service panel **172** or compartment may be provided on the top portion **162** of the cover **122**. The service panel **172** may include positive and negative terminals **170**, or access thereto. Fluid delivery system inlet or inlets or port(s) **174** may, optionally, be included in the service panel **172**. The service panel **172** may also include a diagnostic identification system **176**. For example, a diagnostic display device **176** may be used, such as but not limited to an LCD screen, to communicate information regarding the battery system **116** and may further be coupled to a computer system **128**, such as an on-board computer system, which controls the display. The information may include any suitable information for operation, maintenance, or general knowledge of the battery or battery system **116**. For example, the information may include, but is not limited to, the condition or service requirements of the battery system **116**, or other information from the on-board computer **128** or detectable from the battery system components. The compartment or service panel **172** may include a removable or hinged door or cover **178** for the compartment (see FIG. **3**).

While the service panel **172** is specifically described above in relation to the top portion **162** of the cover **122**, alternative locations for the service panel and other/additional components contained within the service panel may also be acceptable for the purposes provided.

The battery system cover **122** may be integrally formed or connected, such as by one-piece construction. In one or more examples of embodiments, the cover **122** is formed by blow molding a plastic material. However, it should appreciated that the cover **122** may be formed of different materials, by different processes, and/or include separate pieces coupled together (e.g., by brackets, fasteners, plastic fusion, etc.)

In one or more examples of embodiments, the power system **112** and, in particular the battery system **116**, is disposed on, and may be at least partially disposed inside the

body **106** of the vehicle **102**. In one or more examples of embodiments, the base, tray or framework **120** may be mounted to the vehicle **102** such as, for example, to the frame **104** or body **106**. In various embodiments, the base or tray or framework **120** may be formed and/or mounted to stiffen or increase rigidity of the vehicle **102** (e.g. frame, body, or other vehicle component).

As can be seen in FIG. **1**, the body **106** of the vehicle **102** includes one or more seats **110** for vehicle occupants. In one or more examples of embodiments, one or more of the seats **110** may be moved, removed or otherwise adjusted to allow, or provide access to the battery system **116**. For example, the battery system **116** may be installed below the seat **110** or seats of the vehicle **102** as shown in FIG. **7**. In this regard, the battery system **116** may be installed by any suitable means, examples of which include a lift **180** or hoist **182** as shown in FIGS. **8-9**. The base or tray **120** may rest within the battery bay **184** or receptacle in the vehicle **102**, and may further be secured or mounted in place within the battery bay **184**, such as by fasteners secured to the legs or feet **136** of the battery system base **120**.

In various alternative examples of embodiments, the cover **222** of the battery system **116** may include or be comprised of one or more seats **210**. As shown in FIGS. **10-12**, the cover **222** and seat **210** may be coupled or removably coupled together, such as for example, by brackets, fasteners, plastic fusion, or other now known or future developed means. However, the cover **222** and seat **210** may integrally formed or connected (e.g., of one-piece construction). The battery system **116** may also include a seat **210** on, or as the battery system cover **222**. In this regard, the battery system **116** includes a cover **222** with integrated seats **210** which can be removed to access the batteries **124**.

As shown in FIGS. **12-14**, the body **106** of the vehicle **102** may include an apparatus configured to releasably couple a battery system **116** to the body **106** of the vehicle **102**. In one or more examples of embodiments, the body **106** of the vehicle **102** is provided with "drawer-to-rack" system **186**. The system **186** in the illustrated embodiment includes a rail **188** or groove **190**, or other member(s) such as rollers or a slide rail, which receives a portion of the battery system **116**. In particular, the battery system **116** may be mounted on the drawer-to-rack system **186**, (e.g., slidable on the rail **188** or groove **190**). In the illustrated example, a plurality of rails **188**, such as for example two or three rails or combination of rails and grooves, are provided for slidable coupling or movement of the battery system **116**. The battery system base **220** or cover **122** or **222** may be provided with a mating apparatus, e.g., a rail or groove or other suitable device, which corresponds to the apparatus on the vehicle body **106** configured to releasably couple the battery system **116** which is moveable thereon. A docking area **284** may also be provided on the body **106** of the vehicle **102** which is sized to receive the battery system **116** and base **220**. The battery system **116** is moveable into and out of the docking area **284**. While the members shown in FIGS. **12-14** are slide rails **188** or grooves **190**, it should be appreciated that any number of configurations may be utilized to releasably couple the battery system **116** with seat **210** to the body **106** of the vehicle **102**. For example, the battery system **116** with seat **210** may be provided into a compartment designed to releasably couple the system to the body **106**.

Referring to FIGS. **12-14**, a self-docking plug-in system or attachment may also be provided on the body **106** of the vehicle **102** for electrically coupling the battery system **116** to the vehicle. The self-docking system includes, or is defined by a plug arrangement **192** in a surface of the vehicle body **106** in proximity to the battery system **116**. The plug arrangement **192** of the vehicle **102** is electrically coupled to the power system **112** or to the components of the vehicle **102** operated by a power system **112**. The battery system **116** or power system **112** includes and, thus, the self-docking plug in system is further defined by a corresponding or mating plug arrangement **194** on a surface of the cover or base of the battery system **116** which is aligned with the body **106** plug arrangement **192** upon installation. The mating plug arrangement **192**, **194** is electrically coupled to the conductive layer **126** of the battery system **116**, such as for example, to a terminal of plurality of terminals, or may form the terminals. The installed battery system **116** in the battery bay or docking area **284** causes the coupling of the mating plug arrangement **192**, **194**, thereby electrically coupling the battery system **116** to the power system **112** and vehicle **102**. In the illustrated examples shown in FIGS. **12-14**, at least a portion of the self-docking plug-in system **192** is installed on a wall **196** of the docking bay **284**, such that upon sliding of the battery system **116**, with corresponding plug-in arrangement **194** aligned, into place on the vehicle **102** also electrically couples the battery system to the vehicle.

Referring to FIG. **15**, in various examples of embodiments, the vehicle **102** may also include other modular components that may be coupled (e.g., releasably coupled) to the body **206**. The modular components or trim may include body panels **198** or plastics, an overhead canopy **200**, supports for an overhead canopy **202**, HMI/electronics, seatbacks **204**, armrests **206**, structural accessory mounts including, without limitation, golf bag supports, bumpers, etc. In various embodiments, the modular components may improve ease of assembly, and/or repair of the vehicle **102**. Further, one or more of the components may be coupled to the power system **112** or battery system **116** providing an integrated vehicle system.

As indicated in the Figures, many components, such as the cover and base of the power system, the vehicle trim and other panels and components of the vehicle, and the like, are constructed of one or more now known or future developed plastic materials. The various components may be constructed, fabricated, or formed of any number or variation of known or hereafter-developed polymers, copolymers, or other materials including, without limitation, thermoplastics such as for example polyethylene or polypropylene, nylon, fiberglass, fiberglass filled nylon, fiber reinforced polymer (e.g. glass fiber reinforced polymer). Further, these materials may be formed from any number of known or hereafter developed processes including, without limitation, blow-molding, injection molding, gas-assist injection molding, compression molding. It should be appreciated, however, that any or all of the components may be constructed of any known or hereafter developed material or materials suitable for the intended purposes.

In one or more examples of embodiments, the battery system **116** may be assembled by placement of one or more batteries **124** in receptacles **130** of the tray **120**, coupling the conductive layer to the battery terminals **154**, optionally connecting a computer **128** to the conductive layer, and attaching the cover **122** to the tray **120** by the mechanisms described hereinabove. The computer may alternatively be coupled to the cover prior to attachment to the conductive layer. The batteries **124** may be provided in a filled or unfilled state. Accordingly, unfilled batteries may be filled prior to assembling the conductive layer and/or cover to the battery system, or in the alternative may be filled following assembly, such as in some examples following installation in

a vehicle. Once the battery system **116** is assembled, it is installed in a vehicle **102** as previously described herein.

The vehicle, body, battery system and/or housing described herein include a number of advantages over traditional systems. The battery system provides reduced battery watering effort, time and/or costs as it permits simultaneous watering of multiple batteries. The battery system, as an integrated unit also reduces maintenance effort, time and/or costs, as each battery does not need to be tended individually. Furthermore, the system described herein, including a diagnostic display device, reduces diagnostic effort, time and/or costs because such information is readily available on the battery system cover.

The housing, including base and cover, of the battery system provides improved stiffness and/or rigidity of the frame, body and/or vehicle. The elevated floor and/or clearance or apertures of the tray provide an area below the floor of the tray for air to circulate and assist in cooling the batteries and/or battery system.

The combined battery system includes fewer parts, and results in reduced vehicle, housing and/or battery system volume, as well as reduced vehicle, housing and/or battery system weight. These reductions from the use of the integrated battery system also improve storage and/or comfort in the vehicle.

The battery system provides improved battery and component connections permitting quick connect and disconnect of the battery system from the power system and vehicle. The battery system also provides improved performance. For example, the battery system has improved cooling, improved vehicle range per charge, and improved battery life and/or performance because of the various features identified herein.

Additionally, the integrated system including multiple batteries and associated components described herein reduce shipping effort, time and/or costs; as well as delivery effort, time and/or costs; storage effort, time and/or costs; and installation effort, time and/or costs. Moreover, there are fewer components and/or parts in the integrated battery system, and as a result, fewer stock-keeping units (SKUs) for manufacturers, suppliers, sellers, and purchasers. Furthermore, one or more features of the battery system may be used for other manufacturer purposes, such as for example use of the tray for a shipping pallet.

As utilized herein, the terms "approximately," "about," "substantially", and similar terms are intended to have a broad meaning in harmony with the common and accepted usage by those of ordinary skill in the art to which the subject matter of this disclosure pertains. It should be understood by those of skill in the art who review this disclosure that these terms are intended to allow a description of certain features described and claimed without restricting the scope of these features to the precise numerical ranges provided. Accordingly, these terms should be interpreted as indicating that insubstantial or inconsequential modifications or alterations of the subject matter described and claimed are considered to be within the scope of the invention as recited in the appended claims.

It should be noted that references to relative positions (e.g., "top" and "bottom") in this description are merely used to identify various elements as are oriented in the Figures. It should be recognized that the orientation of particular components may vary greatly depending on the application in which they are used.

For the purpose of this disclosure, the term "coupled" means the joining of two members directly or indirectly to one another. Such joining may be stationary in nature or moveable in nature. Such joining may be achieved with the two members or the two members and any additional intermediate members being integrally formed as a single unitary body with one another or with the two members or the two members and any additional intermediate members being attached to one another. Such joining may be permanent in nature or may be removable or releasable in nature.

It is also important to note that the construction and arrangement of the system, methods, and devices as shown in the various examples of embodiments is illustrative only. Although only a few embodiments have been described in detail in this disclosure, those skilled in the art who review this disclosure will readily appreciate that many modifications are possible (e.g., variations in sizes, dimensions, structures, shapes and proportions of the various elements, values of parameters, mounting arrangements, use of materials, colors, orientations, etc.) without materially departing from the novel teachings and advantages of the subject matter recited. For example, elements shown as integrally formed may be constructed of multiple parts or elements show as multiple parts may be integrally formed, the operation of the interfaces may be reversed or otherwise varied, the length or width of the structures and/or members or connector or other elements of the system may be varied, the nature or number of adjustment positions provided between the elements may be varied (e.g. by variations in the number of engagement slots or size of the engagement slots or type of engagement). The order or sequence of any process or method steps may be varied or re-sequenced according to alternative embodiments. Other substitutions, modifications, changes and omissions may be made in the design, operating conditions and arrangement of the various examples of embodiments without departing from the spirit or scope of the present inventions.

While this invention has been described in conjunction with the examples of embodiments outlined above, various alternatives, modifications, variations, improvements and/or substantial equivalents, whether known or that are or may be presently foreseen, may become apparent to those having at least ordinary skill in the art. Accordingly, the examples of embodiments of the invention, as set forth above, are intended to be illustrative, not limiting. Various changes may be made without departing from the spirit or scope of the invention. Therefore, the invention is intended to embrace all known or earlier developed alternatives, modifications, variations, improvements and/or substantial equivalents.

The invention claimed is:

1. A battery system for use in a vehicle comprising:

a tray having a plurality of battery receptacles;

an area of clearance provided below the tray;

a plurality of batteries, each battery in the plurality of batteries received in a battery receptacle from the plurality of receptacles;

a one-piece conductive layer in electrical communication with each battery of the plurality of batteries and a terminal for electrically coupling to a vehicle, wherein the conductive layer includes coupling elements interspersed on the conductive layer and connected for a desired battery configuration so as to make all electrical contacts with the plurality of batteries; and

a cover which interlocks with the tray above or within the area of clearance, the cover having a leg which extends and couples to the tray, the cover carrying a computer, electrical access to the terminal, and a diagnostic identification system for the plurality of batteries;

wherein the tray has a side surface which defines the area of clearance below the tray, and the leg couples to the side surface.

2. The battery system of claim **1**, further comprising a service panel on the cover having the terminal for electrically coupling the battery system to the vehicle and the diagnostic identification system.

3. The battery system of claim **1**, further comprising a port for a fluid delivery system for the plurality of batteries of the battery system.

4. The battery system of claim **1**, wherein the conductive layer is a wiring harness.

5. The conductive layer of claim **4**, wherein the wiring harness comprises a single rigid connective structure having the plurality of coupling elements.

6. The battery system of claim **1**, wherein the cover extends over a surface of the batteries.

7. The battery system of claim **1**, wherein at least one battery receptacle has a respective aperture.

8. The battery system of claim **1**, wherein the batteries are lead-acid batteries.

9. A vehicle having the battery system of claim **1**.

10. The battery system of claim **1**, wherein the plurality of batteries comprises more than two batteries.

11. A housing for a battery system comprising:

a tray having a plurality of receptacles sized to carry batteries, an area of clearance below the tray, wherein each receptacle from the plurality of receptacles has an aperture in the receptacle in direct communication with the area of clearance below the tray; and

a cover which interlocks with the tray above or within the area of clearance, the cover having a leg which extends and couples to the tray;

wherein the tray has a side surface which defines the area of clearance below the tray, and the leg couples to the side surface.

12. The battery system of claim **11**, wherein the cover comprises a vehicle seat.

13. The housing of claim **11**, wherein the tray has a frame and feet extending from the frame to form the area of clearance.

14. The housing of claim **11**, wherein the leg has a flange which couples to a receptor on the tray.

15. The housing of claim **11**, wherein the cover is coupled to the tray by a snap-fit arrangement.

16. The housing of claim **11**, further comprising a service panel.

* * * * *