US009453290B2

(12) **United States Patent**
Keigler et al.

(10) **Patent No.: US 9,453,290 B2**
(45) **Date of Patent: Sep. 27, 2016**

(54) **APPARATUS FOR FLUID PROCESSING A WORKPIECE**

(71) Applicant: **TEL NEXX, INC.**, Billerica, MA (US)

(72) Inventors: **Arthur Keigler**, Wellesley, MA (US); **John Harrell**, Paxton, MA (US); **Zhenqiu Liu**, Northboro, MA (US); **Qunwei Wu**, Westford, MA (US)

(73) Assignee: **TEL NEXX, INC.**, Billerica, MA (US)

(*) Notice: Subject to any disclaimer, the term of this patent is extended or adjusted under 35 U.S.C. 154(b) by 427 days.

(21) Appl. No.: **13/967,891**

(22) Filed: **Aug. 15, 2013**

(65) **Prior Publication Data**

US 2013/0334036 A1 Dec. 19, 2013

Related U.S. Application Data

(60) Continuation of application No. 12/963,991, filed on Dec. 9, 2010, now Pat. No. 8,512,543, which is a division of application No. 10/971,726, filed on Oct. 22, 2004, now abandoned.

(60) Provisional application No. 60/513,761, filed on Oct. 22, 2003.

(51) **Int. Cl.**
C25D 21/10 (2006.01)
C25D 21/12 (2006.01)
(Continued)

(52) **U.S. Cl.**
CPC ***C25D 17/001*** (2013.01); ***C25D 5/003*** (2013.01); ***C25D 7/123*** (2013.01); ***C25D 17/005*** (2013.01);
(Continued)

(58) **Field of Classification Search**
CPC C25D 17/001; C25D 17/00; C25D 5/003; C25D 5/08; C25D 7/12; C25D 17/06; C25D 17/005; C25D 21/10; C25D 21/12; H01L 21/00
USPC 205/148
See application file for complete search history.

(56) **References Cited**

U.S. PATENT DOCUMENTS

1,700,178 A 1/1929 Porzel
1,749,953 A 3/1930 Lichtman
(Continued)

FOREIGN PATENT DOCUMENTS

JP 2007-46154 A 2/2007
JP 2007-308807 A 11/2007

OTHER PUBLICATIONS

Andricacos et al., "Future Directions in Electroplated Materials for Thin-Film Recording", 1998, pp. 1-10.
(Continued)

Primary Examiner — Bryan D. Ripa
(74) *Attorney, Agent, or Firm* — Rothwell, Figg, Ernst, Manbeck, P.C.

(57) **ABSTRACT**

A method of fluid processing a semiconductor workpiece, including disposing a workpiece holder with a housing capable of containing a fluid, the workpiece holder retaining the workpiece, providing an agitation system connected to the housing and comprising a member disposed within the housing adjacent the workpiece holder, and agitating the fluid by moving the member substantially parallel to a surface of the workpiece with a non-uniform oscillatory motion, the non-uniform oscillatory motion being a series of substantially continuous geometrically asymmetric oscillations wherein each consecutive oscillation of the series is geometrically asymmetric having at least two substantially continuous opposing strokes wherein reversal positions of each substantially continuous stroke of the substantially continuous asymmetric oscillation are disposed asymmetrically with respect to a center point of each immediately preceding substantially continuous stroke of the oscillation.

8 Claims, 20 Drawing Sheets

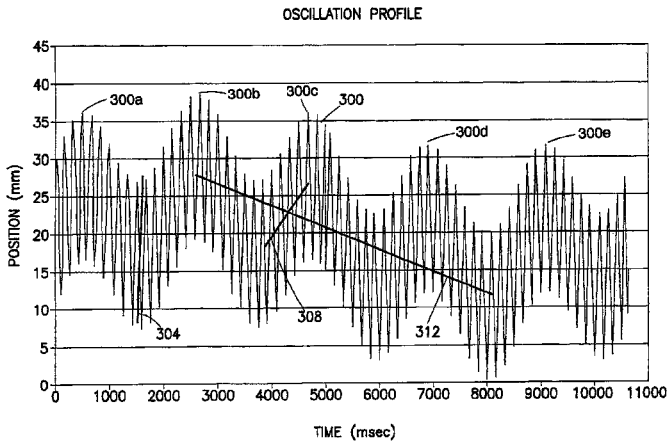

(51) **Int. Cl.**

C25D 17/00	(2006.01)
H01L 21/67	(2006.01)
C25D 7/12	(2006.01)
C25D 17/06	(2006.01)
C25D 5/00	(2006.01)

(52) **U.S. Cl.**

CPC ***C25D 17/06*** (2013.01); ***C25D 21/10*** (2013.01); ***C25D 21/12*** (2013.01); ***H01L 21/67023*** (2013.01); ***H01L 21/67126*** (2013.01)

(56) **References Cited**

U.S. PATENT DOCUMENTS

2,615,692	A	10/1952	Hans Muller
3,053,424	A	9/1962	Reinhard
3,503,856	A	3/1970	Blackmore
3,862,891	A	1/1975	Smith
4,068,162	A	1/1978	Robinson
4,102,756	A	7/1978	Castellani et al.
4,304,641	A	12/1981	Grandia et al.
4,561,960	A	12/1985	Jeannot et al.
4,654,089	A	3/1987	Singelyn et al.
4,696,729	A	9/1987	Santini
4,964,964	A	10/1990	Murphy
5,024,746	A	6/1991	Stierman et al.
5,048,201	A	9/1991	Layton
5,227,041	A	7/1993	Brogden et al.
5,268,035	A	12/1993	Neubauer et al.
5,273,642	A	12/1993	Crites et al.
5,312,532	A	5/1994	Andricacos et al.
5,342,495	A	8/1994	Tung et al.
5,421,987	A	6/1995	Tzanavaras et al.
5,429,733	A	7/1995	Ishida
5,447,615	A	9/1995	Ishida
5,516,412	A	5/1996	Andricacos et al.
5,522,975	A	6/1996	Andricacos et al.
5,556,479	A	9/1996	Bran
5,660,699	A	8/1997	Saito et al.
5,683,564	A	11/1997	Reynolds
5,807,469	A	9/1998	Crafts et al.
5,883,762	A	3/1999	Calhoun et al.
5,899,001	A	5/1999	Layton
5,927,302	A	7/1999	Hayami et al.
6,017,437	A	1/2000	Ting et al.
6,036,833	A	3/2000	Tang et al.
6,071,957	A	6/2000	Miller et al.
6,080,291	A	6/2000	Woodruff et al.
6,108,932	A	8/2000	Chai
6,174,011	B1	1/2001	Keigler
6,193,859	B1	2/2001	Contolini et al.
6,251,250	B1	6/2001	Keigler
6,258,220	B1	7/2001	Dordi et al.
6,261,426	B1	7/2001	Uzoh et al.
6,334,937	B1	1/2002	Batz, Jr. et al.
6,360,756	B1	3/2002	Chen et al.
6,372,051	B1	4/2002	Adams et al.
6,379,511	B1	4/2002	Fatula et al.
6,495,005	B1	12/2002	Colgan et al.
6,502,591	B1	1/2003	Scranton et al.
6,524,461	B2	2/2003	Taylor et al.
6,540,899	B2	4/2003	Keigler
6,547,937	B1	4/2003	Oberlitner et al.
6,685,814	B2	2/2004	Uzoh et al.
6,746,565	B1	6/2004	Bleck et al.
6,749,391	B2	6/2004	Woodruff et al.
6,760,167	B2	7/2004	Meehan et al.
6,776,887	B2	8/2004	Roberts et al.
6,844,274	B2	1/2005	Yoshioka et al.
6,849,970	B2	2/2005	Watanabe
6,911,127	B2	6/2005	Batz, Jr. et al.
6,936,153	B1	8/2005	Ritzdorf
7,022,211	B2	4/2006	Yoshioka et al.
7,097,749	B2	8/2006	Donovan, III et al.
7,393,439	B2	7/2008	McHugh et al.
7,722,724	B2	5/2010	Woods et al.
7,897,027	B2	3/2011	Nakai et al.
2002/0027080	A1	3/2002	Yoshioka et al.
2002/0132559	A1	9/2002	Togawa
2003/0201184	A1	10/2003	Dordi et al.
2004/0245094	A1	12/2004	McHugh et al.
2004/0255442	A1	12/2004	McDiarmid et al.
2005/0167275	A1	8/2005	Keigler et al.
2008/0245669	A1	10/2008	Yoshioka et al.
2009/0139871	A1	6/2009	Saito et al.
2010/0295225	A1	11/2010	Keigler et al.
2011/0139627	A1	6/2011	Keigler et al.
2012/0305404	A1	12/2012	Keigler

OTHER PUBLICATIONS

Brockner et al., "Evolution of Stress and Microstructure in NiFe (20 wt.%) Thin Films During Annealing", Thin Solid Films 385 (20010, pp. 225-229.

Rasmussen et al., "Electroplating and Characterization of Cobalt-Nickel-Iron and Nickel-Iron for Magnetic Microsystems Applications," Science, Sensors and Actuators a 92 (2001), pp. 242-248.

Song et al., "Stress Changes of Binary CoNi Alloy Films Electrodeposited from Different Anions," Abstract from the Electrochemical Society Joint International Meeting, Oct. 5, 2004, 1 page.

Tabakovic et al., "Composition Structure, Stress, and Coercivity of Electrodeposited Soft Magnetic CoNiFe Films", Journal of the Electrochemical Society, 149(1) (2002) pp. C18-C22.

"Automatic loading and unloading (combined)," Ludy Brochure, Mar. 2000.

"Global Support Generates Business," Totally Integrated Automation, 2001.

International Search Report and Written Opinion mailed Jul. 18, 2013 in PCT/US2013/036038 (7 pages).

U.S. Office Action mailed Jun. 23, 2015 in co-pending U.S. Appl. No. 13/444,570 filed Apr. 11, 2012. (41 pages).

Office Action mailed Apr. 5, 2016 in corresponding Korean Patent Application No. 10-2014-7031542 (with an English translation) (13 pages).

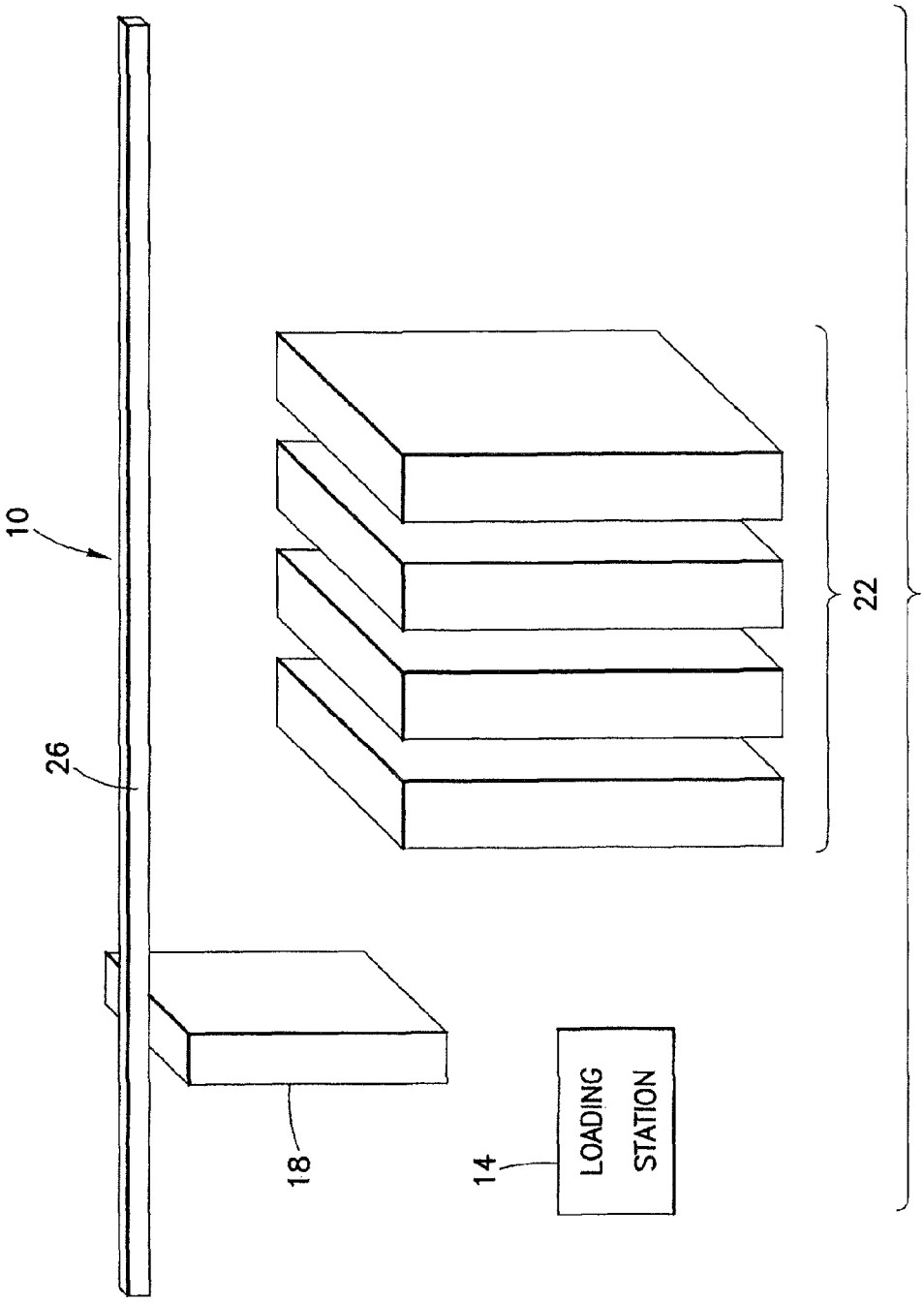

FIG. 1

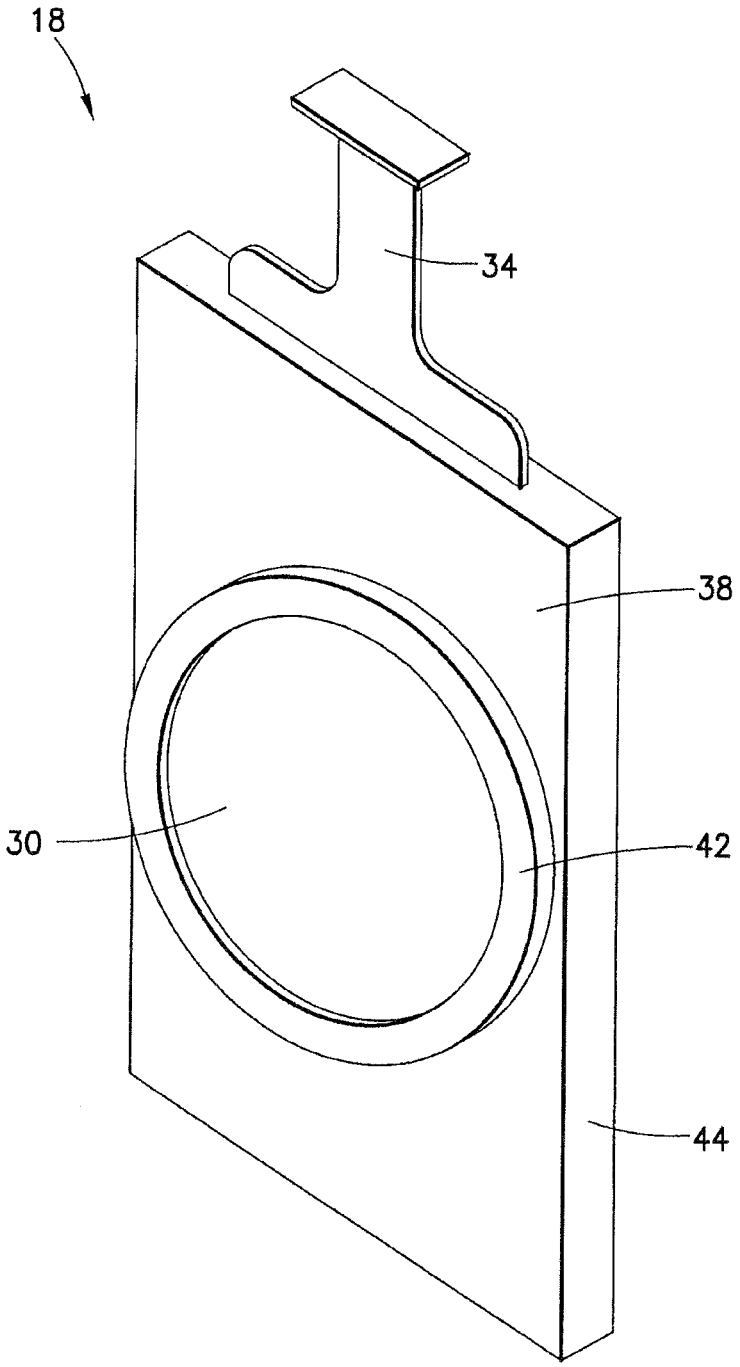

FIG.2

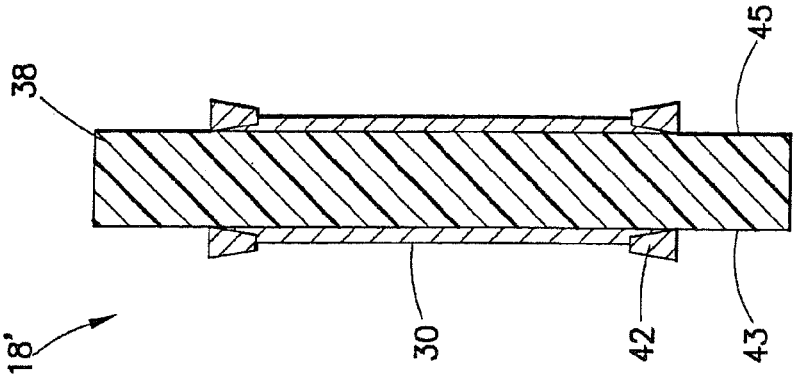

FIG.3

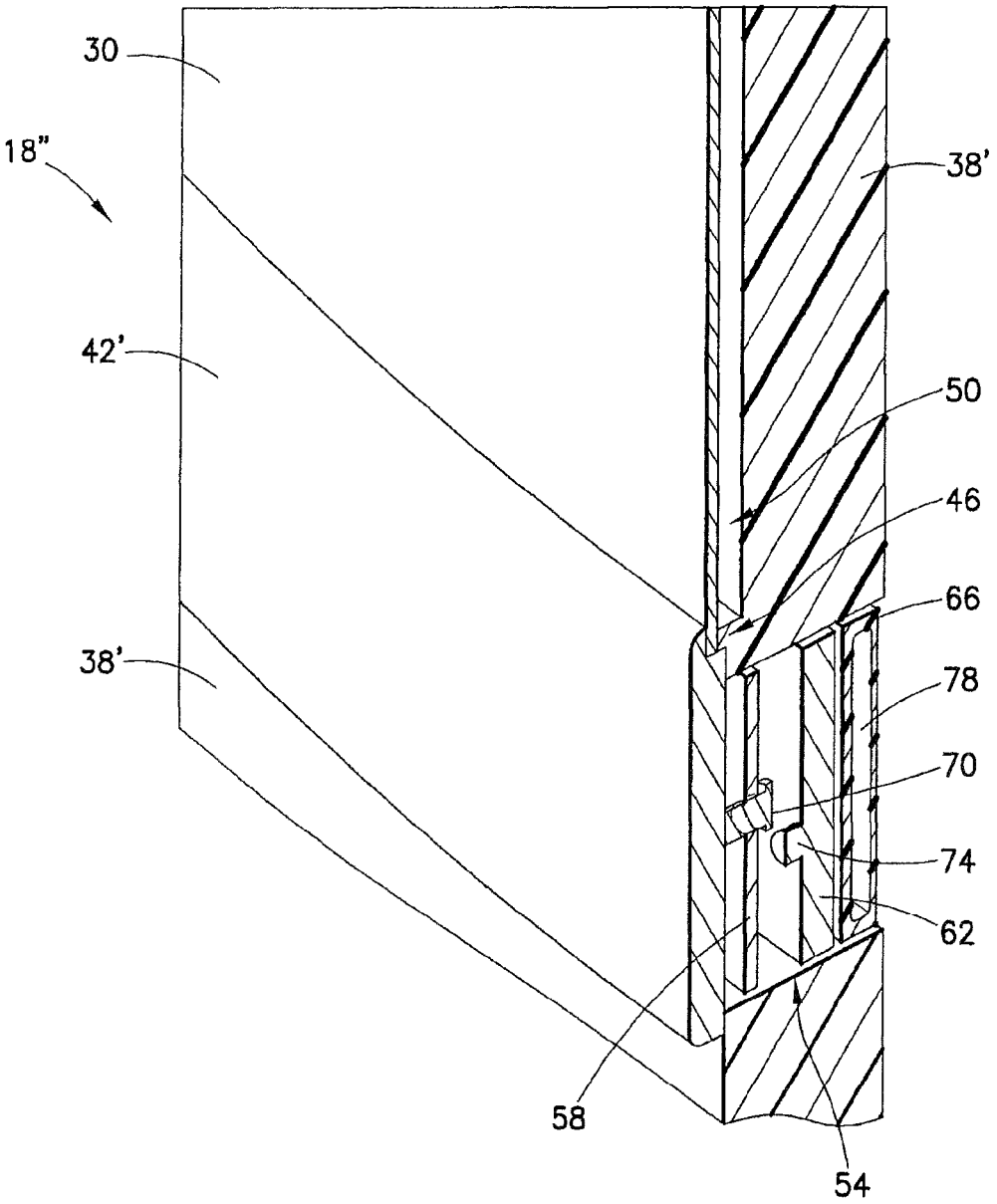

FIG.4

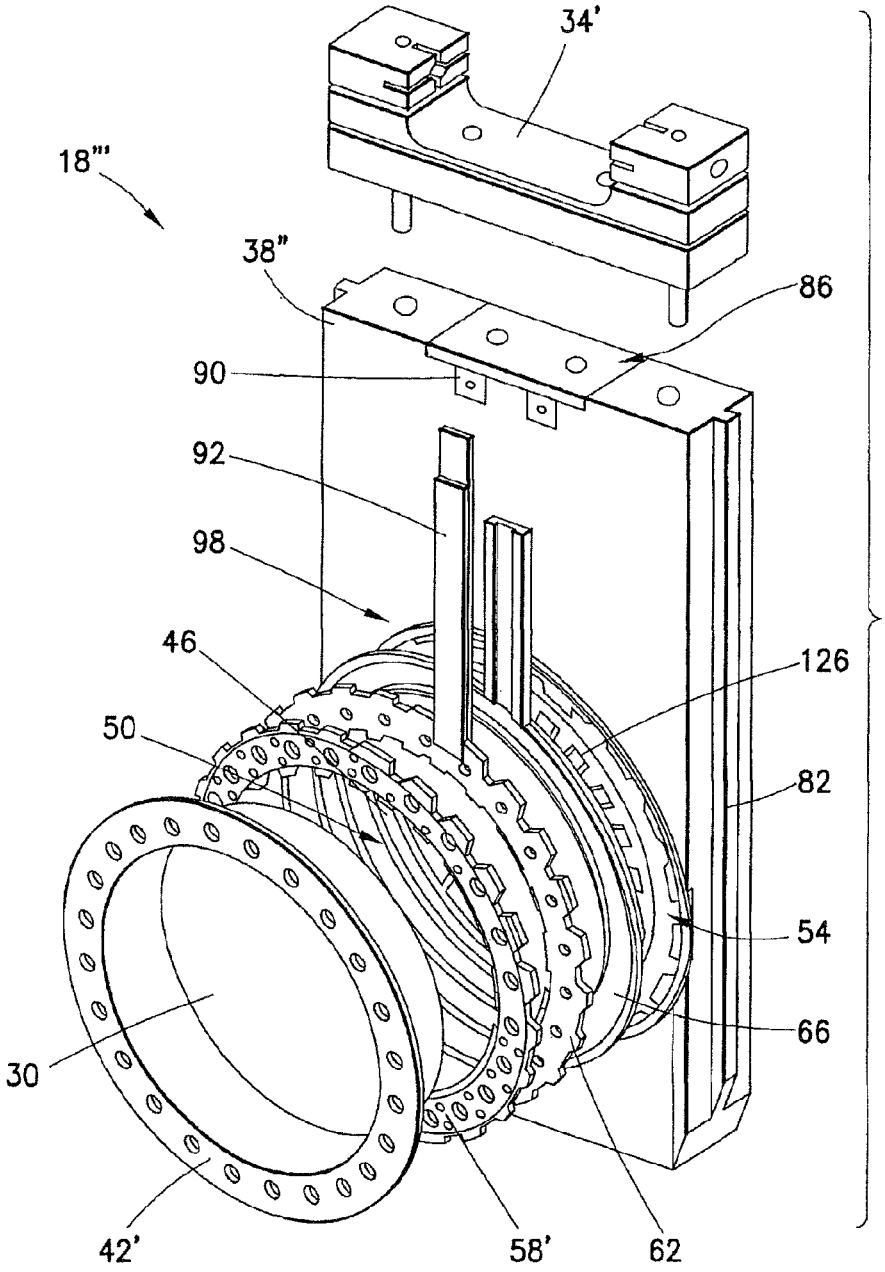

FIG.5

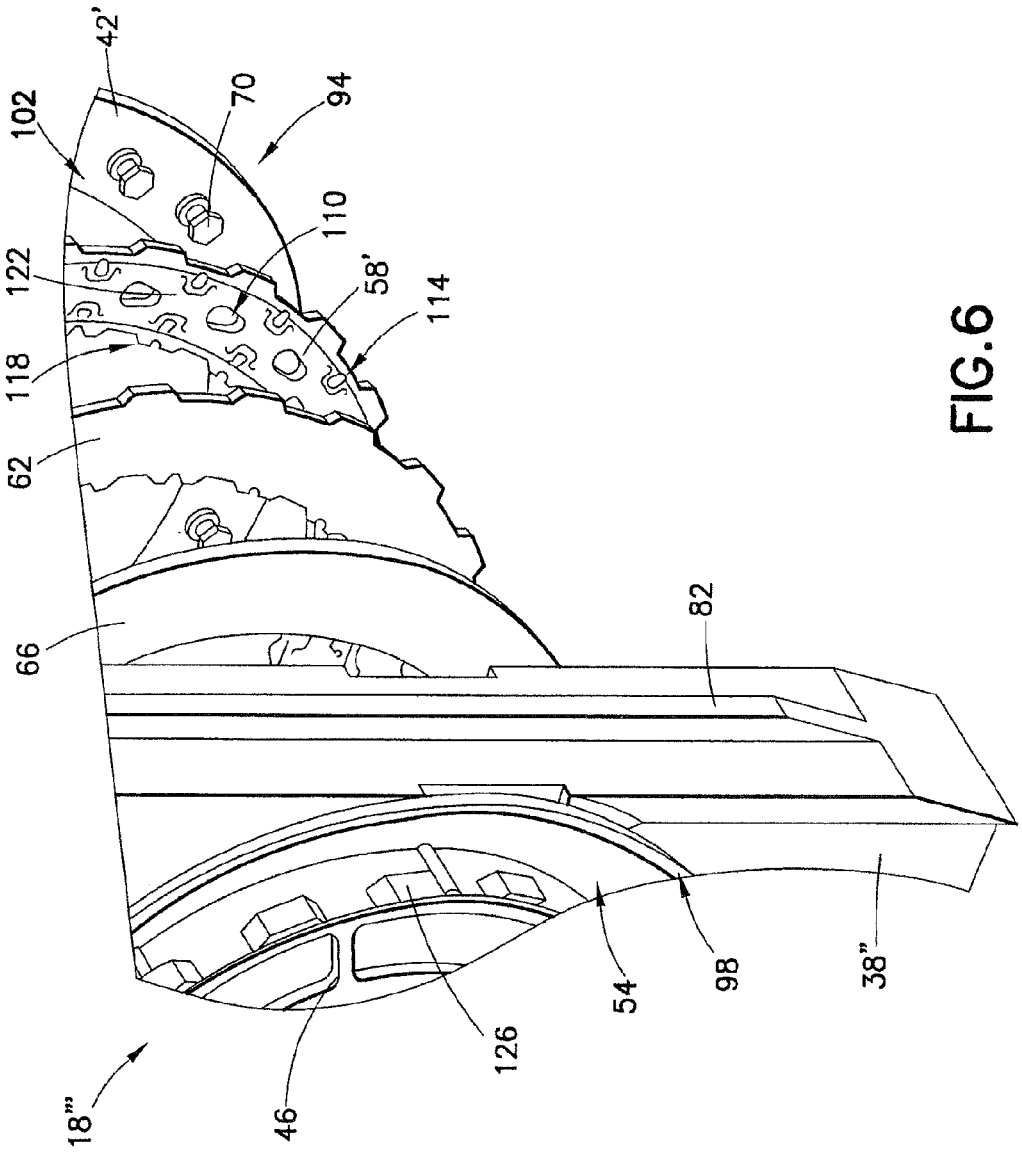

FIG.6

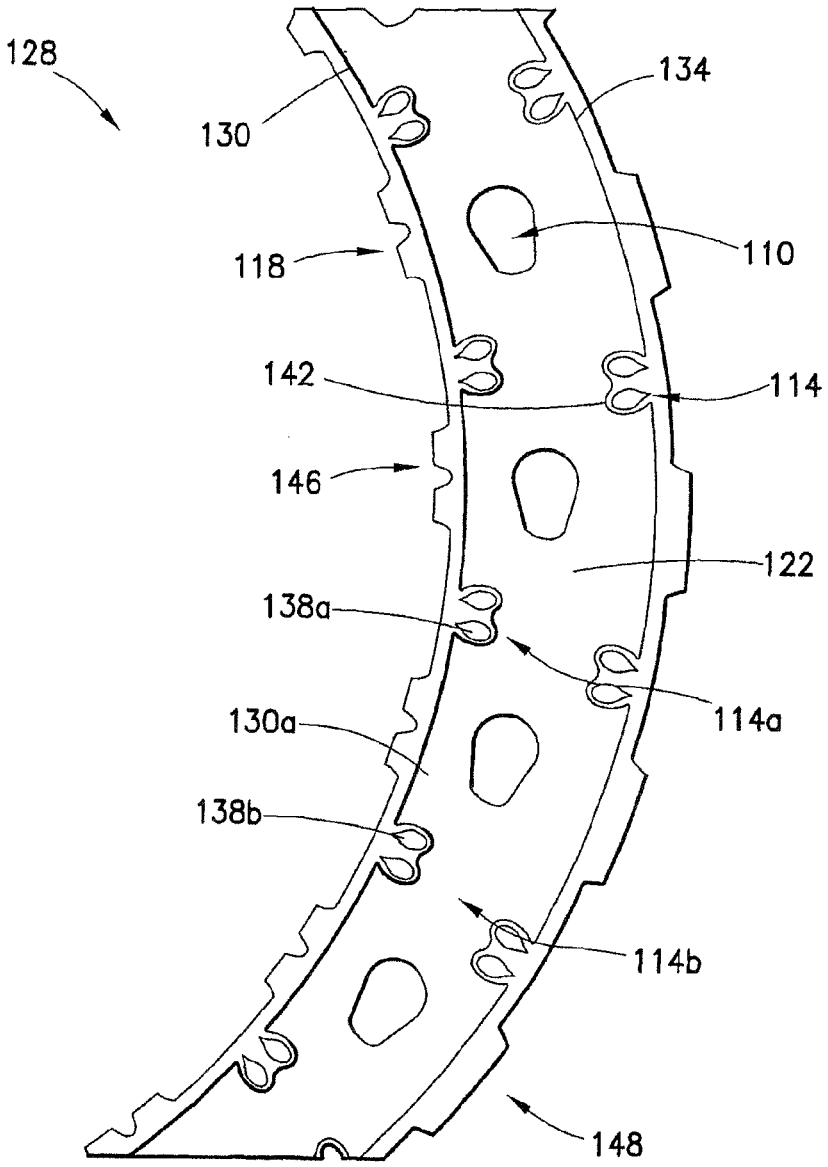
128
130
134
118
110
142
114
146
122
138a
114a
130a
138b
114b
148

FIG.7

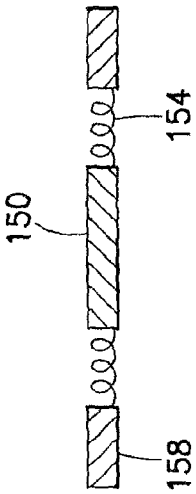

FIG.8A

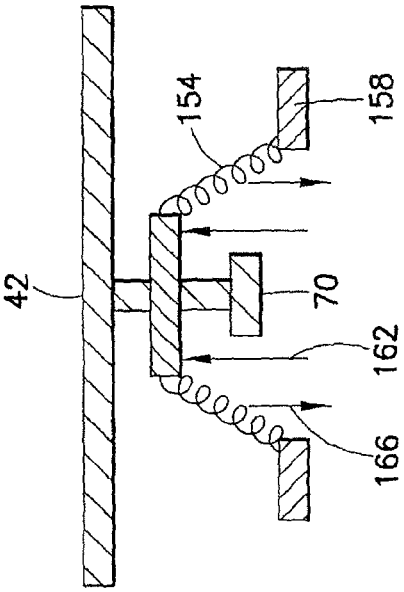

FIG.8B

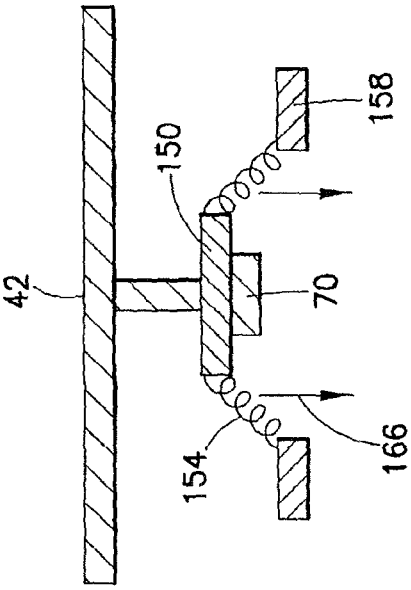

FIG.8C

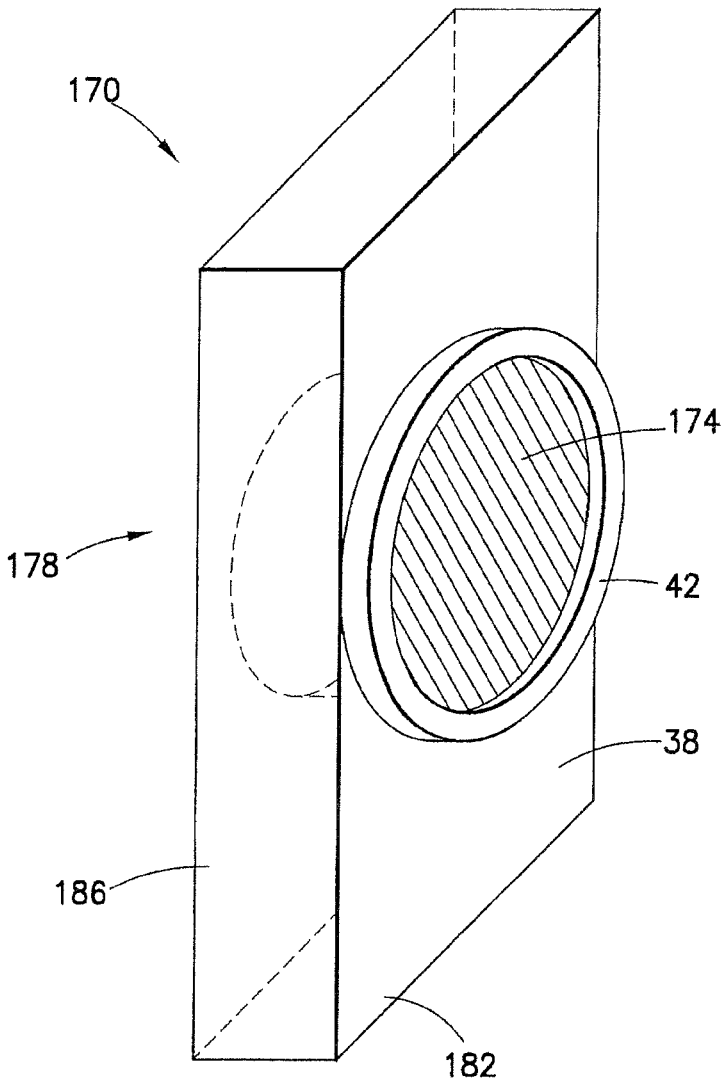

FIG.9

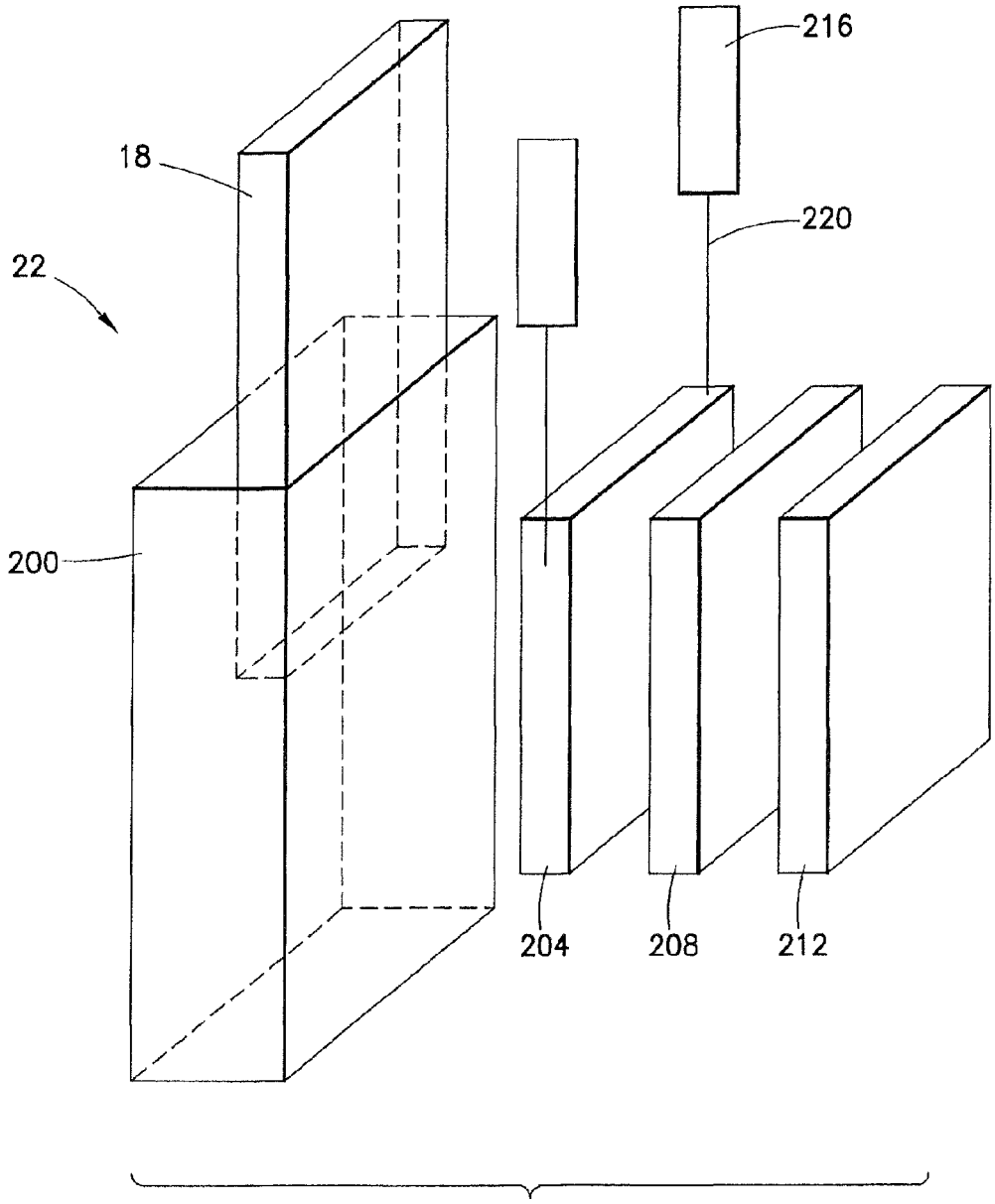

FIG.10

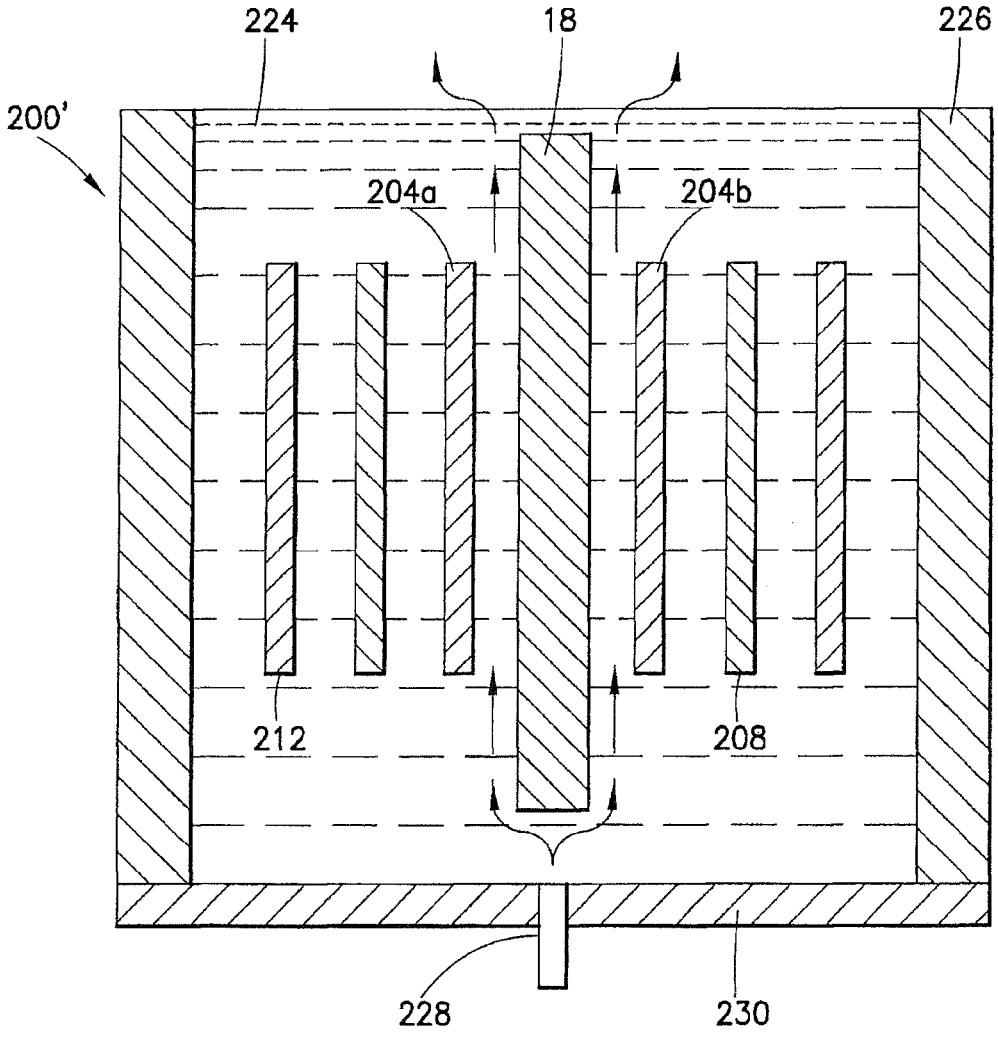

FIG.11

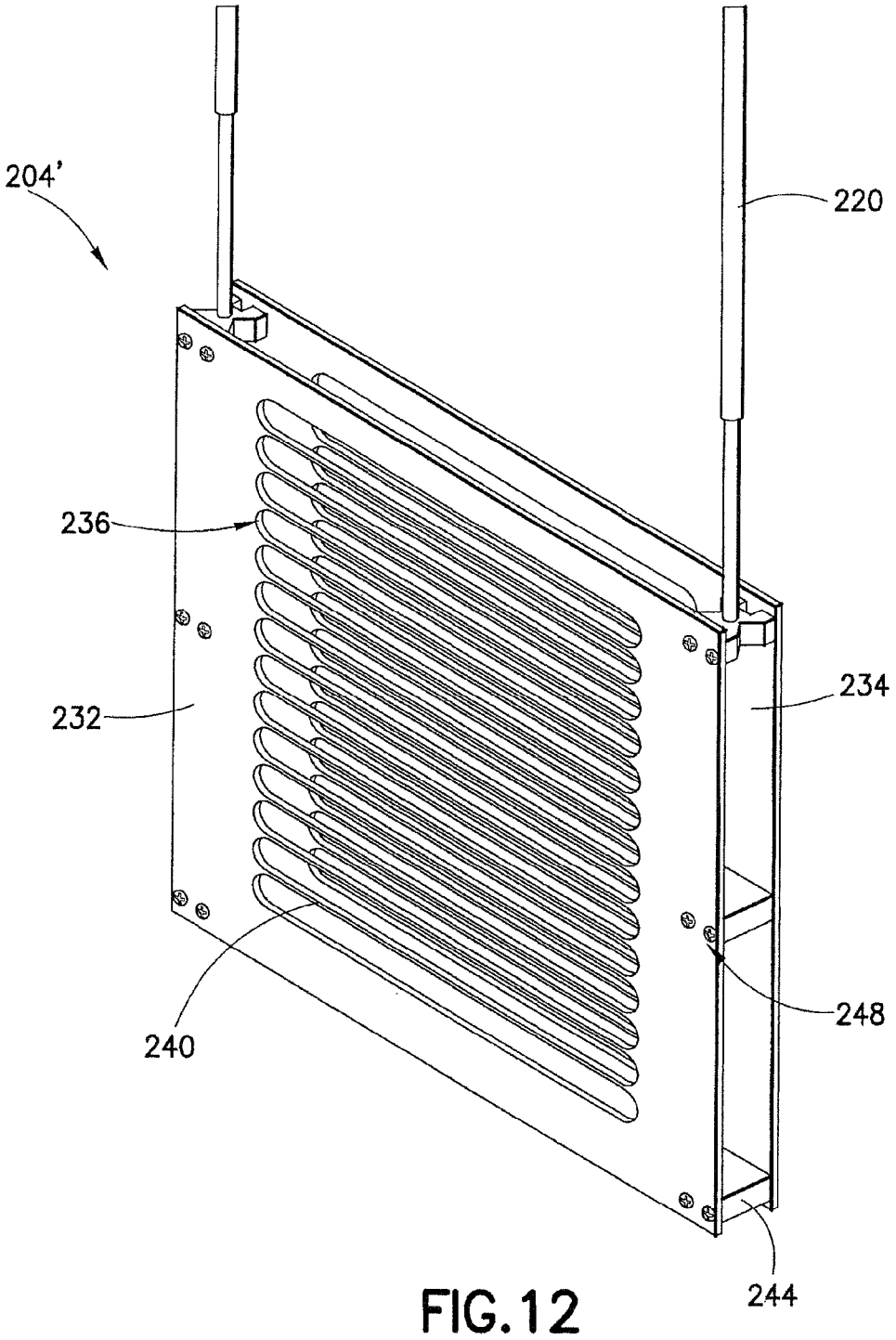

FIG. 12

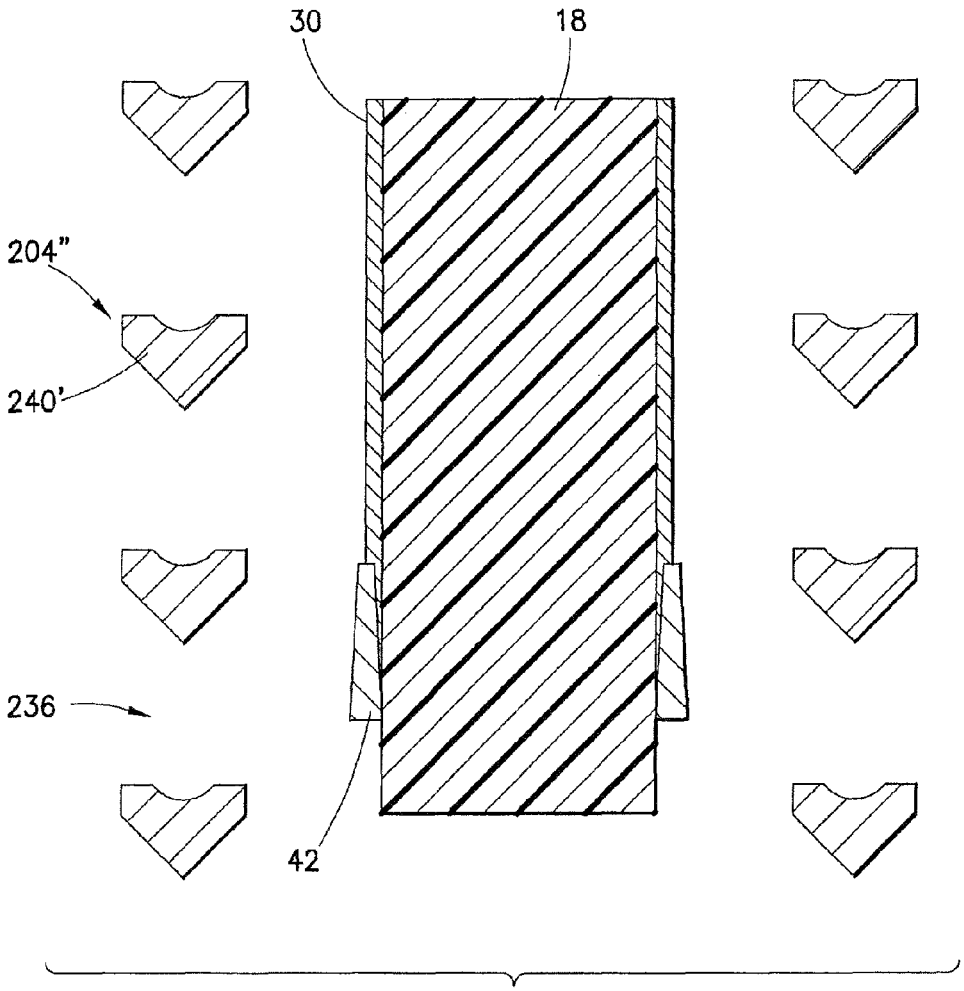

FIG. 13

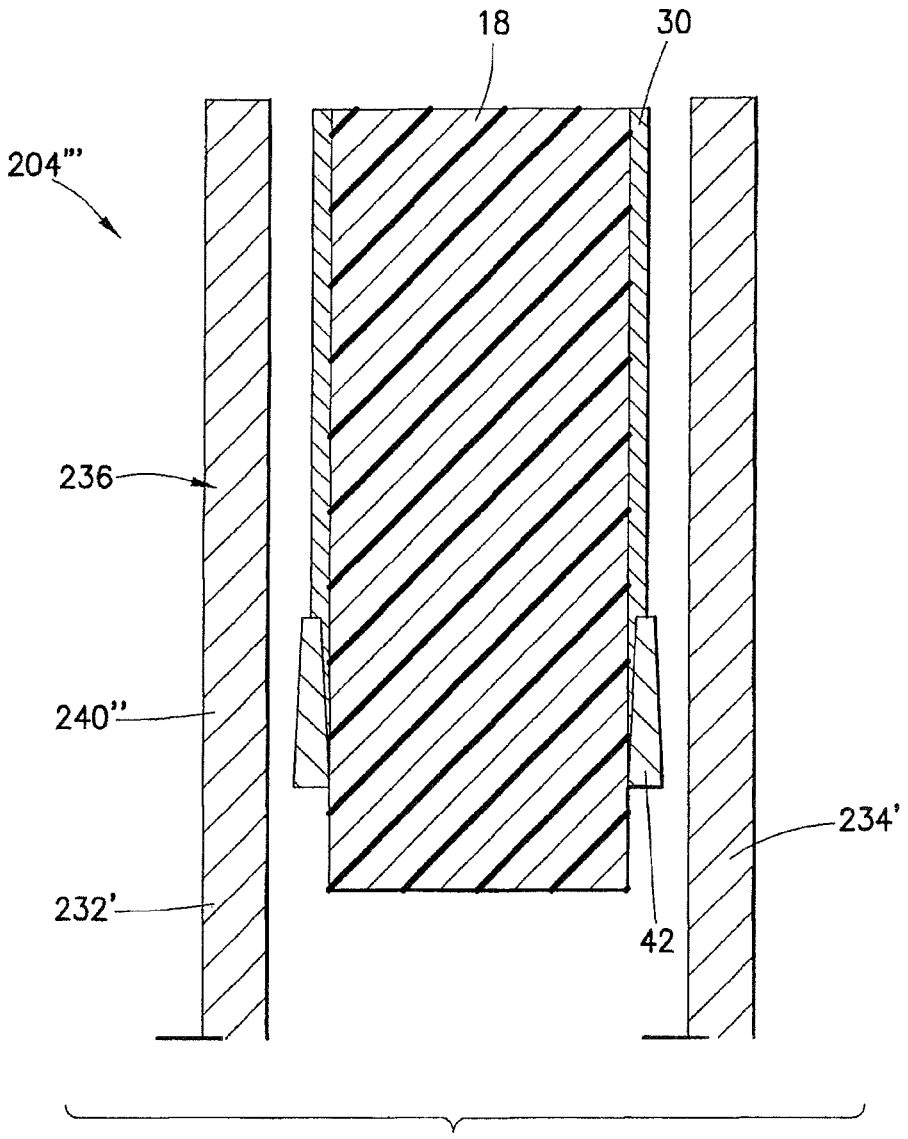

FIG.14

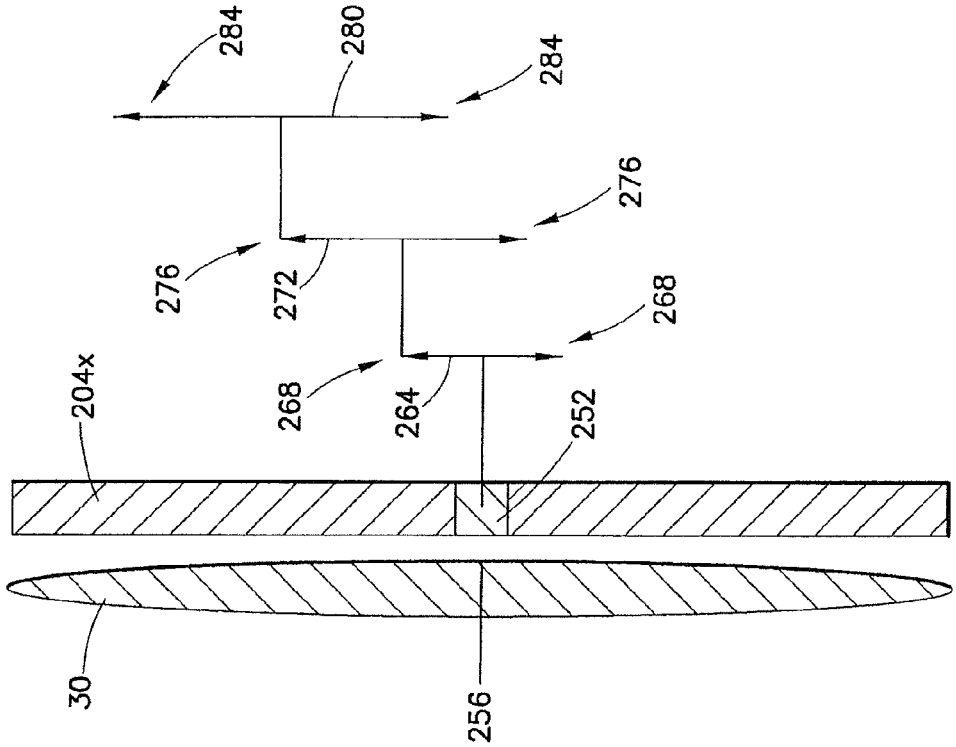
284
280
284
276
276
272
268
268
264
204x
252
30
256

FIG.16

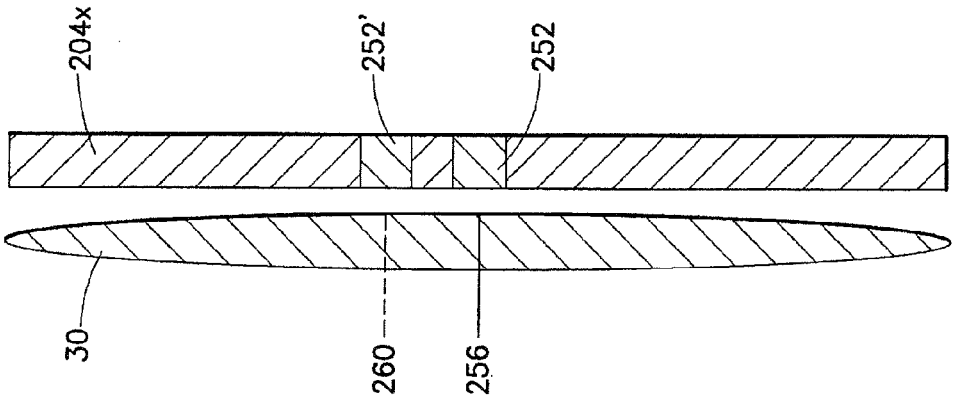
204x
252'
252
30
260
256

FIG.15

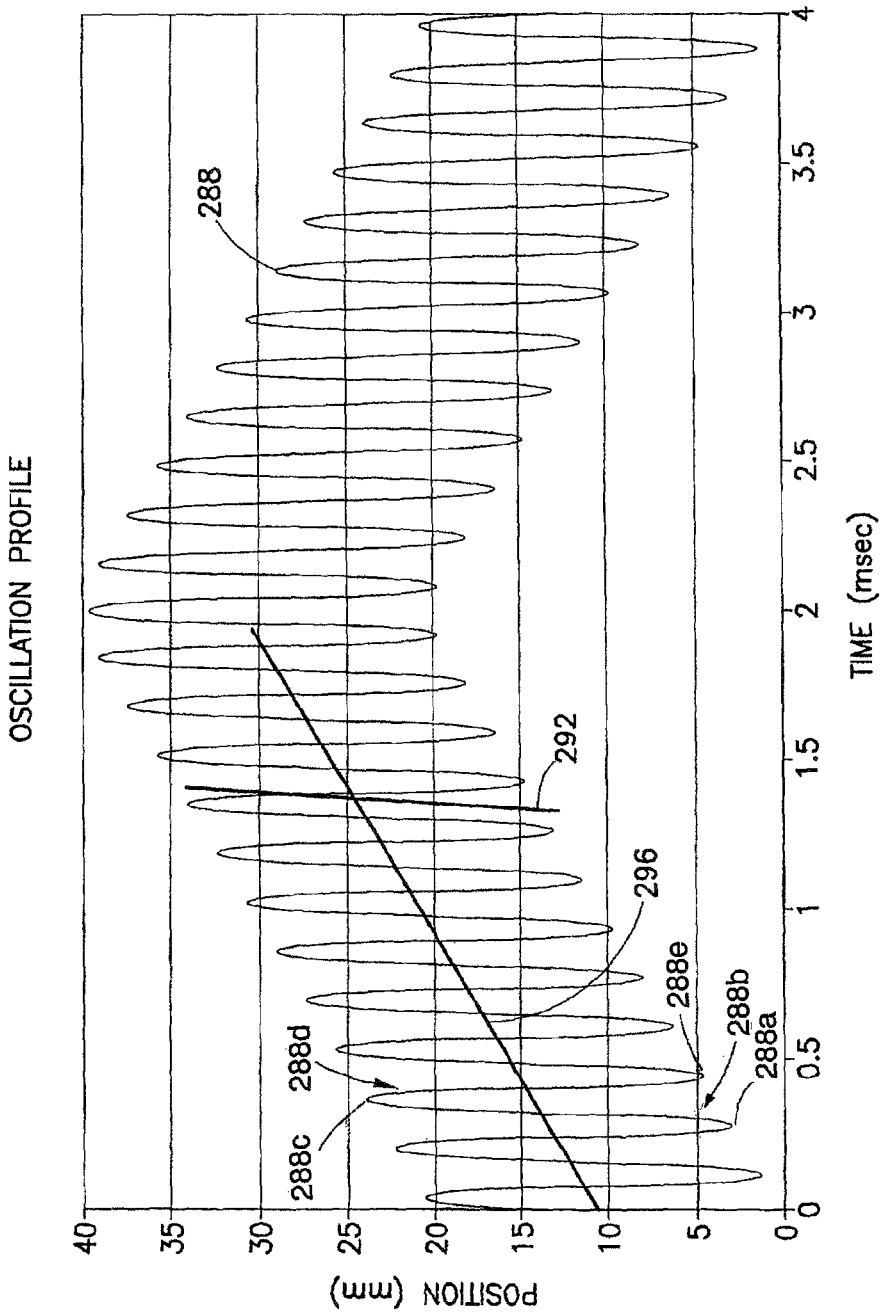
OSCILLATION PROFILE
POSITION (mm)
TIME (msec)
0
5
10
15
20
25
30
35
40
0
0.5
1
1.5
2
2.5
3
3.5
4
288
292
296
288a
288b
288c
288d
288e

FIG. 17

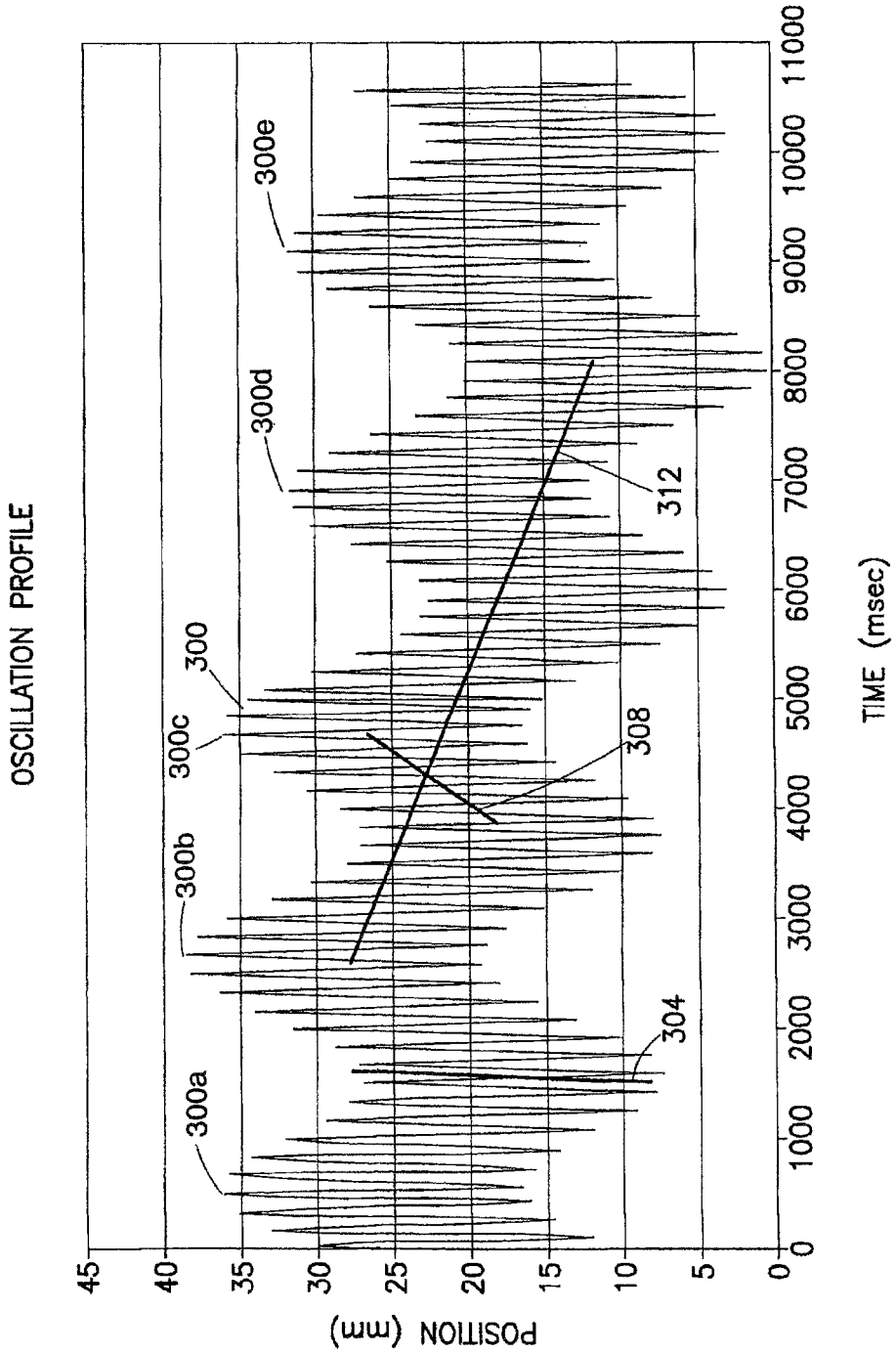
OSCILLATION PROFILE
POSITION (mm)
TIME (msec)
300a
300b
300c
300
300d
300e
304
308
312
0
5
10
15
20
25
30
35
40
45
0
1000
2000
3000
4000
5000
6000
7000
8000
9000
10000
11000

FIG.18

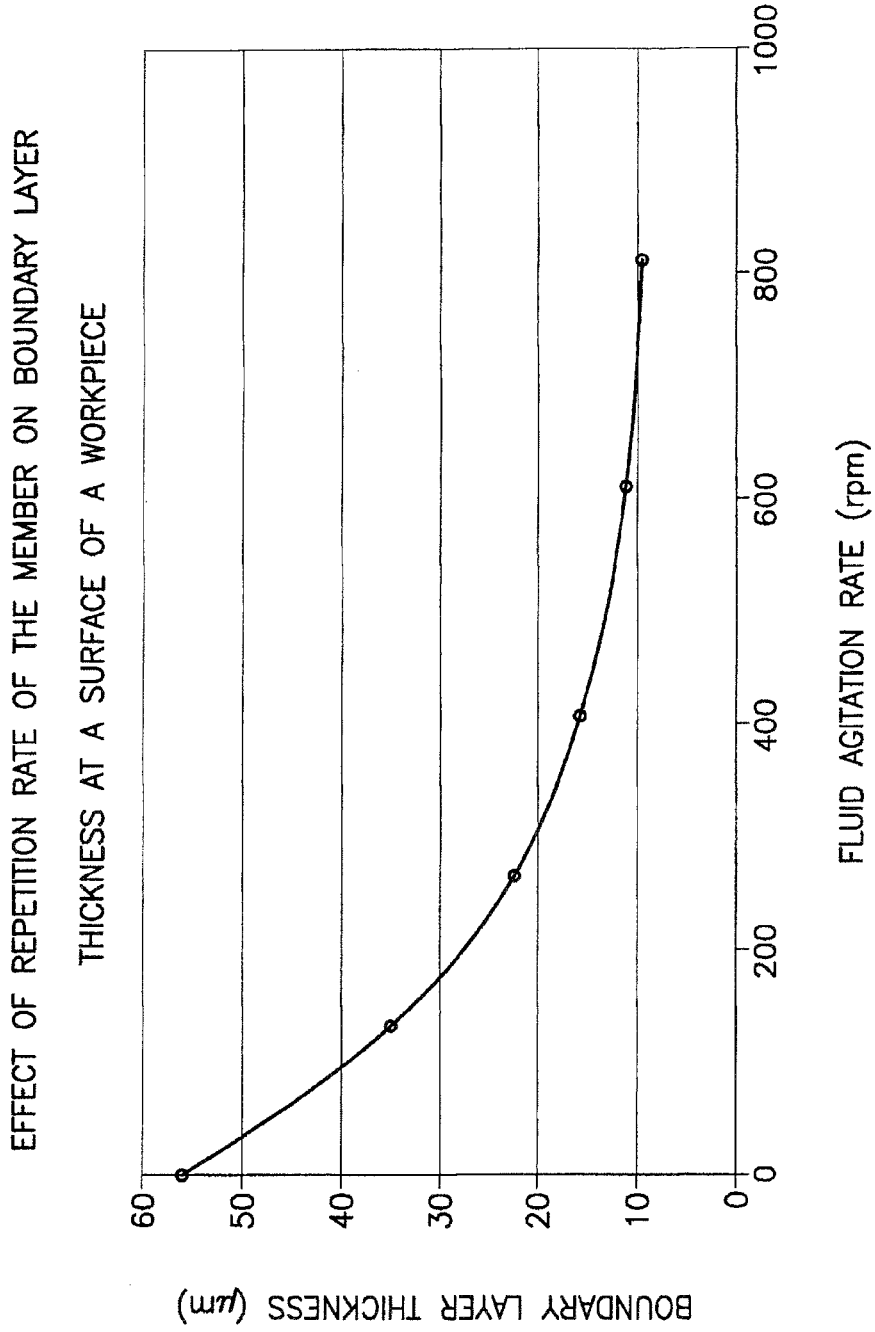
EFFECT OF REPETITION RATE OF THE MEMBER ON BOUNDARY LAYER
THICKNESS AT A SURFACE OF A WORKPIECE
BOUNDARY LAYER THICKNESS (μm)
60
50
40
30
20
10
0
0
200
400
600
800
1000
FLUID AGITATION RATE (rpm)

FIG.19

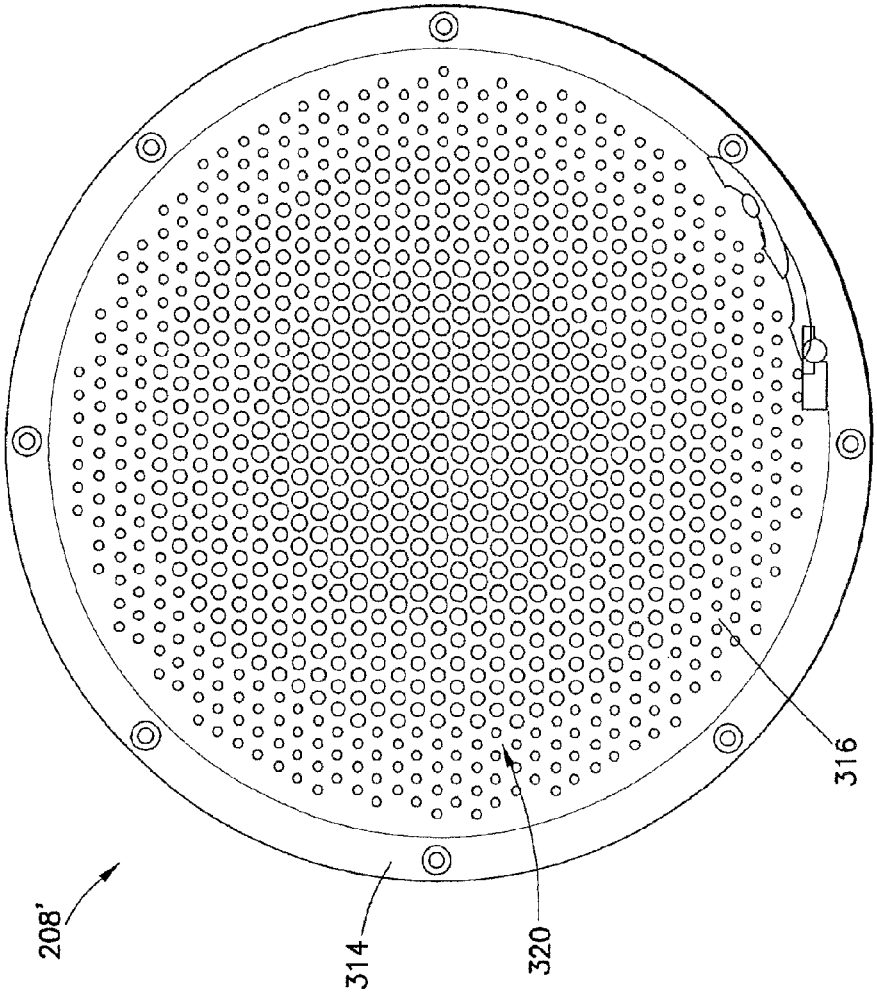

FIG.20

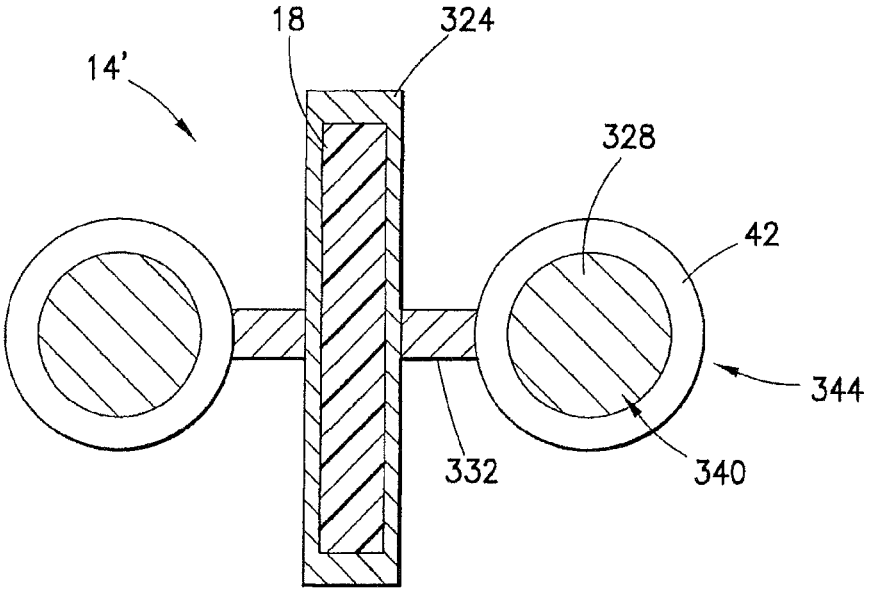

FIG.21A

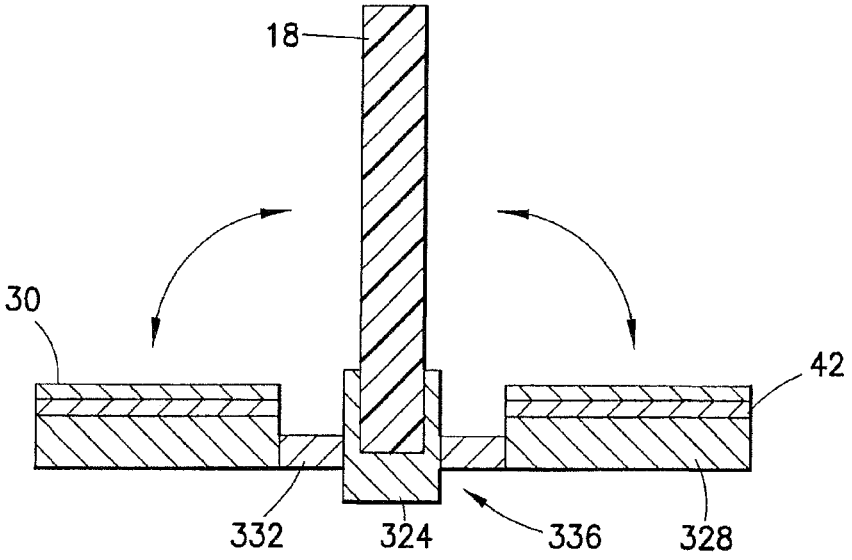

FIG.21B

APPARATUS FOR FLUID PROCESSING A WORKPIECE

CROSS-REFERENCE TO RELATED APPLICATION

This application claims the benefit of priority of each of the following applications and describes the relationship of the earlier applications. The present application is a Continuation Application of and claims the benefit of priority from co-pending U.S. application Ser. Nos. 12/963,991, filed Dec. 9, 2010 and 10/971,726, filed Oct. 22, 2004, also claims the benefit of priority from U.S. Provisional Application No. 60/513,761, filed Oct. 22, 2003. The entire contents of foregoing applications are incorporated herein by reference.

FIELD OF THE INVENTION

The invention relates generally to a method and apparatus for fluid processing a workpiece, and more particularly to a method and apparatus for controlling fluid flow and electric field distribution during the fluid processing of a workpiece.

BACKGROUND OF THE INVENTION

Electrodeposition, among other processes, is used as a manufacturing technique for the application of films (e.g., metal films) to various structures and surfaces, such as semiconductor wafers and silicon workpieces. An important feature of systems used for such processes is their ability to produce films with uniform and repeatable characteristics such as film thickness, composition, and profile relative to the underlying workpiece profile.

A number of factors can prevent the formation of a uniform film. For example, the plating current can spread out when passing from the anode to the cathode of the system, which can result in thicker plated deposits near the outer edge of a workpiece. In addition, the fluid distribution in a process chamber, particularly at an anode or cathode surface, may not be uniform. Non-uniform fluid distribution at the cathode can cause a variation in the thickness of the diffusion boundary layer across the workpiece surface, which can lead to non-uniform film thickness. Moreover, inefficient fluid mixing near a surface where a film is being deposited can result in air or gas bubbles becoming entrapped at the surface. This can inhibit further deposition in the vicinity of the gas bubble, which can cause a non-uniform deposition. Finally, if a workpiece is not securely retained in a process chamber, the position of the workpiece can change during processing, and when fluid processing a workpiece, fluid can leak into unwanted areas if a secure, fluid-tight seal is not formed with the workpiece.

Prior art systems suffer from one or more of these limitations, and a need therefore exists for new and improved methods and apparatus for controlling fluid flow and electric field distribution during the fluid processing of a workpiece and for reliably retaining a workpiece during processing.

SUMMARY OF THE INVENTION

The invention, in various aspects, features a system and components for processing one or more workpieces by application and removal of materials from one or more surfaces of the workpiece(s). The application and removal can be performed by fluid flow control and/or electric field

control at a surface of a workpiece. A workpiece can be planar or substantially planar, and can be thin or ultra-thin. Suitable workpieces include, but are not limited to, semiconductor wafers, silicon workpieces, interconnection substrates, and printed circuit boards. This field is sometimes referred to as fluid processing or wet processing, and includes electrodeposition, electroplating, electroless plating, chemical etching, resist coating, resist stripping, dielectric coating, and workpiece cleaning, among other processes.

In one embodiment, the invention features a method and apparatus for fluid processing a workpiece. The system can include a process module and a system of one or more fluid processing elements to control the fluid flow and/or the electric field distribution during the fluid processing of the workpiece. In various embodiments, a member can be used to agitate the fluid during deposition of a film. The member can employ a non-uniform oscillatory motion to agitate the fluid. The member can be an agitation paddle (e.g., a SHEAR PLATE agitation paddle available from NEXX Systems, Inc. in Billerica, Mass.). In some embodiments, a plate is used to shape an electric field incident on a surface of a workpiece.

By controlling the fluid flow and the electric field distribution, improved deposition of the film on the workpiece surface can result. Furthermore, a vertical configuration and/or a workpiece holder that can retain a plurality of workpieces in a back-to-back configuration can be used to improve throughput and to reduce the footprint of the workpiece processing system. This can increase productivity and reduce cost. In addition, using a modular architecture for the processing system can allow a system layout to be optimized to the fluid process and to the throughput requirements.

In one aspect, the invention features an apparatus for fluid processing a workpiece. The apparatus includes a housing capable of containing a fluid and a workpiece holder disposed within the housing and adapted to retain the workpiece. The apparatus also includes a member disposed within the housing adjacent the workpiece holder and adapted to move substantially parallel to a surface of the workpiece with a non-uniform oscillatory motion to agitate the fluid. In one embodiment, the non-uniform oscillatory motion includes a reversal position that changes after each stoke of the non-uniform oscillatory motion. The non-uniform oscillatory motion can include a primary oscillation stroke and at least one secondary oscillation stroke. The length of the primary oscillation stroke can be substantially the same as the separation of spaced openings defined by the member, and a secondary oscillation stroke can change the reversal position of the non-uniform oscillatory motion of the member.

In one embodiment, the member defines a plurality of spaced openings. In one embodiment, the member includes a plurality of spaced blades. The profile of the plurality of spaced blades can include a cup shape or an angled profile. In some embodiments, the member includes two paddle plates joined by a spacer feature into a single assembly so that the workpiece holder is insertable into the member. In one embodiment, the apparatus also includes a linear motor assembly to move the member.

In one embodiment, the apparatus includes a plate disposed adjacent the member to shape the electric field incident on a surface of the workpiece. A body of the plate can define a plurality of holes, the diameters of which vary (e.g., with a substantially radial pattern) on a surface of the plate. In various embodiments, the member can form a non-

periodic fluid boundary layer at the surface of the workpiece. In one embodiment, the member reduces a fluid boundary layer thickness at the surface of the workpiece, e.g., to less than about at 10 μm. The member can be positioned less than about 2 mm from the surface of the workpiece.

In another aspect, the invention provides a method of fluid processing a workpiece. The method includes disposing a workpiece holder within a housing capable of containing a fluid. The workpiece holder retains the workpiece. The method also includes positioning a member within the housing adjacent the workpiece holder and agitating the fluid by moving the member substantially parallel to a surface of the workpiece with a non-uniform oscillatory motion. In various embodiments, the method can include minimizing electric field imaging and/or fluid flow imaging of the member on the surface of the workpiece via the non-uniform oscillatory motion. In one embodiment, the method includes removing gas bubbles entrapped in the fluid from the surface of the workpiece. In various embodiments, the method can include depositing or dissoluting a metal or a plastic on a surface of the workpiece.

In yet another aspect, the invention features an apparatus for varying an electric field at a surface of a workpiece. The apparatus includes a housing capable of containing a fluid, a workpiece holder disposed within the housing and adapted to retain the workpiece, and a plate disposed within the housing and spaced from the workpiece. The plate defines a plurality of holes having a distribution of hole sizes to vary a property of the electric field passing through the plate to the surface of the workpiece. In one embodiment, the distribution of hole sizes includes a continuous gradient of hole size (e.g., a substantially radial pattern). In one embodiment, the electric field proximate to the surface of the workpiece is uniform. The property of the electric field can include amplitude. In one embodiment, the plate includes a non-conductive material that serves to block a portion of the electric field as it passes through the plate to the surface of the workpiece.

In various embodiments, the apparatus also includes a member adapted to move substantially parallel to a surface of the workpiece with a non-uniform oscillatory motion to agitate the fluid. The non-uniform oscillatory motion can include a reversal position that changes after each stoke of the non-uniform oscillatory motion. In one embodiment, the non-uniform oscillatory motion includes a primary oscillation stroke and at least one secondary oscillation stroke. The length of the primary oscillation stroke can be substantially the same as the separation of opening defined by the member, and a secondary oscillation stroke can change the reversal position of the non-uniform oscillatory motion of the member. In one embodiment, the member defines a plurality of spaced openings. In one embodiment, the member includes a plurality of spaced blades.

In still another aspect, the invention features a method for varying an electric field at a surface of a workpiece. The method includes disposing a workpiece holder within a housing capable of containing a fluid and positioning a plate within the housing spaced from the workpiece holder. The workpiece holder retains the workpiece, and the plate defines a plurality of holes having a distribution of hole sizes. The method also includes passing the electric field through the plate to vary a property of the electric field incident on the surface of the workpiece.

In various embodiments, the method can include minimizing electric field imaging and/or fluid flow imaging of the member on the surface of the workpiece via a non-uniform oscillatory motion. In one embodiment, the method includes removing gas bubbles entrapped in the fluid from the surface of the workpiece. In various embodiments, the method can include depositing or dissoluting a metal or a plastic on a surface of the workpiece. In one embodiment, the method includes forming a non-periodic fluid boundary layer at the surface of the workpiece via the non-uniform oscillatory motion of the member. In one embodiment, the method includes decreasing a fluid boundary layer thickness at the surface of the workpiece via the non-uniform oscillatory motion of the member.

In another aspect, the invention provides an apparatus for fluid processing a workpiece. The apparatus includes a housing capable of containing a fluid, a workpiece holder disposed within the housing and adapted to retain the workpiece, and a member defining a plurality of spaced openings. The member can be disposed within the housing adjacent the workpiece holder and can be adapted to move substantially parallel to a surface of the workpiece so that the plurality of spaced openings can agitate the fluid. In one embodiment, a non-uniform oscillatory motion of the plurality of spaced openings agitates the fluid. The non-uniform oscillatory motion can include a reversal position that changes after each stoke of the non-uniform oscillatory motion. In one embodiment, the non-uniform oscillatory motion includes a primary oscillation stroke and at least one secondary oscillation stroke. The length of the primary oscillation stroke can be substantially the same as the separation of spaced openings defined by the member, and a secondary oscillation stroke can change the reversal position of the non-uniform oscillatory motion of the member. In one embodiment, a linear motor assembly moves the member.

In one embodiment, the apparatus also includes a plate disposed adjacent the member to shape the electric field incident on a surface of the workpiece. A body of the plate can define a plurality of holes, diameters of which varying on a surface of the plate. The plurality of holes can vary in a substantially radial pattern. The member can form a non-periodic fluid boundary layer at the surface of the workpiece. In one embodiment, the member reduces a fluid boundary layer thickness at the surface of the workpiece, e.g., to less than about at 10 μm. In one embodiment, the member is positioned less than about 2 mm from the surface of the workpiece.

In still another aspect, the invention features a method of fluid processing a workpiece. The method includes disposing a workpiece holder within a housing capable of containing a fluid and positioning a member within the housing adjacent the workpiece holder. The workpiece holder retains the workpiece, and the member defines a plurality of spaced openings. The method also includes agitating the fluid with the plurality of spaced openings by moving the member substantially parallel to a surface of the workpiece.

In various embodiments, the method can include minimizing electric field imaging and/or fluid flow imaging of the member on the surface of the workpiece via a non-uniform oscillatory motion. In one embodiment, the method includes removing gas bubbles entrapped in the fluid from the surface of the workpiece. In various embodiments, the method can include depositing or dissoluting a metal or a plastic on a surface of the workpiece.

In another aspect, the invention features an apparatus for fluid processing a workpiece. The apparatus includes a mean for retaining the workpiece in a housing capable of containing a fluid, and a means for agitating the fluid with a non-uniform oscillatory motion substantially parallel to a surface of the workpiece.

In yet another aspect, the invention provides an apparatus for varying an electric field at a surface of a workpiece. The apparatus includes a mean for retaining the workpiece in a housing capable of containing a fluid, and a means defining a plurality of holes having distribution of hole sizes for varying the electric field incident on the surface of the workpiece.

In still another aspect, the invention features an apparatus for fluid processing a workpiece. The apparatus includes a mean for retaining the workpiece in a housing capable of containing a fluid, and a means defining a plurality of spaced openings for agitating the fluid with a motion substantially parallel to a surface of the workpiece.

Other aspects and advantages of the invention will become apparent from the following drawings, detailed description, and claims, all of which illustrate the principles of the invention, by way of example only.

BRIEF DESCRIPTION OF THE DRAWINGS

The advantages of the invention described above, together with further advantages, may be better understood by referring to the following description taken in conjunction with the accompanying drawings. In the drawings, like reference characters generally refer to the same parts throughout the different views. The drawings are not necessarily to scale, emphasis instead generally being placed upon illustrating the principles of the invention.

FIG. **1** depicts a block diagram of an exemplary production system for a workpiece.

FIG. **2** shows a perspective view of an illustrative embodiment of a workpiece holder according to the invention.

FIG. **3** shows a cross-section of an exemplary workpiece holder for retaining a plurality of workpieces according to the invention.

FIG. **4** shows a cross-section of an exemplary workpiece holder according to the invention.

FIG. **5** depicts an exploded view of another exemplary workpiece holder according to the invention.

FIG. **6** shows another exploded view the workpiece holder of FIG. **5**.

FIG. **7** shows a plan view of a portion of an exemplary member having a plurality of flex features according to the invention.

FIGS. **8**A-**8**C depict diagrammatic representations of the movement and action of the member and the flex feature(s) of an apparatus for retaining a workpiece according to the invention.

FIG. **9** depicts a perspective view of another exemplary workpiece holder including a hole bored through for processing a plurality of surfaces of a workpiece according to the invention.

FIG. **10** shows an exploded view of an exemplary apparatus for processing a workpiece according to the invention.

FIG. **11** depicts a sectional view of another exemplary embodiment of an apparatus for processing a workpiece according to the invention.

FIG. **12** depicts a perspective view of an exemplary embodiment of a member for agitating a fluid during fluid processing of a workpiece according to the invention.

FIG. **13** shows a section view of another exemplary embodiment of a member for agitating a fluid during fluid processing of a workpiece according to the invention.

FIG. **14** shows a section view of another exemplary embodiment of a member for agitating a fluid during fluid processing of a workpiece according to the invention.

FIG. **15** depicts a diagrammatic representation of the position of a portion of a member for agitating a fluid adjacent a workpiece surface during a oscillatory motion according to the invention.

FIG. **16** shows a diagrammatic representation of oscillatory motion of a portion of a member adjacent a workpiece surface for agitating a fluid according to the invention.

FIG. **17** shows a graphical view of an exemplary non-uniform oscillation profile for agitating a fluid during fluid processing of a workpiece according to the invention.

FIG. **18** depicts a graphical view of another exemplary non-uniform oscillation profile for agitating a fluid during fluid processing of a workpiece according to the invention.

FIG. **19** shows a graphical view of boundary layer thickness versus fluid agitation speed according to the invention.

FIG. **20** depicts a plan view of an exemplary embodiment of a plate for varying an electric field during processing of a workpiece according to the invention.

FIG. **21**A shows a plan view of an exemplary loading station for workpieces according to the invention.

FIG. **21**B shows a side view of the loading station depicted in FIG. **21**A.

DESCRIPTION OF THE INVENTION

FIG. **1** illustrates an exemplary production system **10** for a workpiece. The production system **10** can utilize various features of the invention. The production system **10** can include a loading station **14** for delivering a workpiece to a workpiece holder **18**. The production system **10** can also include one or more modules **22**, e.g., process modules, for processing a workpiece. The loading station **14** and the one or more modules **22** can be mounted in a single framework, or in adjacent frameworks. The framework can include a transport system **26** for moving a workpiece holder **18** from the loading station **14** to a first module and between modules. An exemplary production system is a Stratus System available from NEXX Systems, Inc. in Billerica, Mass.

The workpiece (examples of which are shown in subsequent figures) can be planar, substantially planar, and/or thin or ultra-thin. In various embodiments, the workpiece has a circular shape or a substantially circular shape. In other embodiments, the workpiece is non-circular. For example, the workpiece can be rectangular, square, oval, or triangular, or have another suitable geometric configuration. In various embodiments, the workpiece can be, for example, a semiconductor wafer, silicon workpiece, interconnection substrate, printed circuit board, or other workpiece suitable for processing. The loading station **14** can be an automated loading station, such as an automated wafer handling front end available from Newport Automation in Irvine, Calif. or Brooks Automation in Chelmsford, Mass.

The workpiece holder **18**, according to the invention, can be used to retain a single workpiece, or a plurality of workpieces. The workpiece holder **18** can utilize a back-to-back configuration for two or more workpieces. Furthermore, the workpiece holder **18** can have a hole bored through its center for processing a plurality of surfaces of a single workpiece. These embodiments are described in more detail below.

Each of the one or more modules **22**, according to the invention, can be used for cleaning, rinsing, drying, pretreating, plating, buffering/holding, etching, electrodepositing, electroplating, electroetching, electrodissolution, electroless depositing, electroless dissolution, photoresist depositing, photoresist stripping, chemical etch processing, seed layer etching, and similar processes requiring fluid flow

and/or electric field control and use. In various embodiments, the workpiece is retained by the workpiece holder **18** while processing is performed. Each of the one or more modules **22** and/or the workpiece holder **18** can be used to apply a variety of films to a surface of a workpiece, including, but not limited to, metal, plastic, and polymer films. Suitable metals include, but are not limited to, copper, gold, lead, tin, nickel, and iron. In addition, alloys, compounds, and solders of these metals (e.g., lead/tin and nickel/iron) can be applied to a workpiece surface.

In various embodiments, the film deposited can have a thickness between about 1 μm and about 150 μm. Using the features of the invention, the film can be high purity, and the thickness can be uniform across the surface of the workpiece. The film can have uniform electrical properties on (i) a flat, continuous uniform surface, (ii) on a flat continuous surface with micro-scale topography, and/or (iii) on a flat surface with topography and/or photo-resist patterning.

In various embodiments, the production system **10** can include between one and thirty modules, although additional modules can be used depending on the application. Various novel features of the one or more modules **22** are described in more detail below. Each of the one or more modules **22** can include a robust and modular construction so that it can be removed from the production system **10**. As such, the production system **10** can be customizable for specific applications. For example, a module and a workpiece holder can be configurable for processing different sized workpieces, e.g., 150, 200, 250 or 300 mm wafers, with minimal lost production time during customization.

In addition, the layout of a processing system, e.g., the position or sequence of one or more process modules, can be optimized for a specific fluid process or for a series of processes, which can lead to increased throughput. For example, a vertical line architecture, e.g., as utilized by the Stratus system, can be combined with a dual wafer processing system. Deposition modules can be about 20 cm wide, and the number of modules can be adjusted to match the rate of the loading station. An exemplary rate is about 40 workpieces per hour.

Furthermore, the layout of a processing system can orient a workpiece in a vertical configuration. For a process or series of processes having a long deposition time, a vertical configuration can enable a significant number of workpieces to be processed simultaneously. For example, for a process time longer than about 10 minutes, over 20 workpieces can be processed simultaneously. In addition, in a process that generates substantial volumes of gas or air at the workpiece surface, e.g., electrophoretic deposition of photoresist, a vertical configuration can facilitate the removal of air or gas bubbles from the surface of a workpiece.

The production system **10** itself can be manual or automated. The production system **10** can include a computer that controls the operation of the loading station **14** and/or the transport system **26**, as well the one or more modules **22**. In one exemplary embodiment of an automated system, a freshly loaded workpiece is transported from the loading station **14** to the most distant module, and then subsequent processing returns the finished workpiece to the loading station **14**.

FIG. **2** shows an illustrative embodiment of a workpiece holder **18** for retaining a workpiece **30**. In this illustrative embodiment, the workpiece holder **18** includes a handle **34** that can be used to lift and/or transport the workpiece holder **18**. The handle can be engageable with the transport mechanism **26** shown in FIG. **1**. The workpiece holder **18** also includes a body **38** and a ring **42** for contacting the workpiece **30**. In various embodiments, the body **38** of the workpiece holder **18** is formed from a plastic, such as high density polyethylene (HDPE) or polyvinylidene fluoride (PVDF). The body **38** can also include a guide strip (shown in FIGS. **5** and **6**) formed in at least one edge **44**. The guide strip(s) can be used to align the workpiece holder **18** in one of the modules **22**.

The ring **42** can press, hold, and/or retain the workpiece **30** against the body **38** of the workpiece holder. Contact between the workpiece **30** and the ring **42** occurs at the outer perimeter of the workpiece **30**, e.g., by contacting less than 2 mm of the outer perimeter of the workpiece **30**. In various embodiments, the ring **42** includes a flexible member encased in an elastomer. Portion(s) of the elastomer can be used to contact the workpiece **30**, and, in some embodiments, can create a seal with the workpiece **30**.

In various embodiments, the ring **42** can have a circular shape, a substantially circular shape, or be non-circular (e.g., rectangular, square, oval, or triangular, or have another suitable geometric configuration). In one embodiment, the ring **42** has a low profile relative to the workpiece **30**. For example, in one detailed embodiment, the ring **42** extends less than about 1 mm beyond the plane of the exposed surface of the workpiece **30**. In various embodiments, the ring **42** can be a contact ring or a sealing ring. In one embodiment, the ring **42** is the sealing ring assembly described in U.S. Pat. No. 6,540,899 to Keigler, the entire disclosure of which is herein incorporated by reference.

FIG. **3** depicts a cross-section of an illustrative embodiment of a workpiece holder **18'** that can be used to retain a plurality of workpieces **30**. The body **38** of the workpiece holder **18'** includes a first surface **43** in a first plane and a second surface **45** in a second plane (e.g., a front surface and a back surface). Each surface has associated with it a ring **42** for retaining a respective workpiece **30**, e.g., for retaining the respective workpiece **30** against the respective surface **43** or **45** of the workpiece holder **18'**. For example, a first ring can retain a first workpiece on the first surface of the workpiece holder in the first plane, and a second ring can retain a second workpiece on the second surface of the workpiece holder in a second plane.

According to the embodiment illustrated in FIG. **3**, the first and second planes are parallel to each other and spaced apart. In various embodiments, the first and second planes form an angle. In one embodiment, the first and second planes are orthogonal. In other embodiments, the first and second planes form either an acute angle or an obtuse angle. It is understood that the invention is not limited to a workpiece holder with only two planes. Embodiments using a single plane or more than two planes can be used. Two planes are used here to illustrate an exemplary embodiment of an apparatus retaining a plurality of workpieces.

In one embodiment, the workpieces are held in a back-to-back configuration, and, in a detailed embodiment, the workpieces are centered on each other in the back-to-back configuration. In some embodiments, the workpieces are held on distinct surfaces of the workpiece holder and are offset from one another. In another embodiment, a plurality of workpieces can be held on a single surface of a workpiece holder, e.g., in a side-by-side configuration. In some embodiments, a plurality of workpieces can be held on one surface of a workpiece holder, while at least one additional workpiece is held on a second surface of a workpiece holder.

FIG. **4** illustrates a cross-section of another embodiment of a workpiece holder **18"**, which shows an exemplary system for retaining the workpiece **30** against the workpiece holder **18"**. A ring **42'** holds the workpiece **30** against a body

38' of the workpiece holder 18". The workpiece 30 contacts the body 38' at a contact point 46. The body 38' can define a recess 50 so that the workpiece 30 only contacts a portion of the body 38'.

According to the illustrated embodiment, the body 38' of the workpiece holder 18" defines a groove 54 for holding at least a member 58, a backing member 62, and a bladder 66. The member 58 is flexible, and can also be referred to as a flexure plate. The member 58 can have a circular shape, a substantially circular shape, or be non-circular (e.g., rectangular, square, oval, or triangular, or have another suitable geometric configuration). In some embodiments, the member 58 can be a ring or a plate, and in one detailed embodiment, can have a substantially planar ring-shape. In various embodiments, the member 58 can be formed from a spring-like material, such as stainless steel or titanium. The member 58 can include at least one retaining feature (e.g., as shown in FIGS. 5 and 6) that can engage at least one engagement feature of the ring, for example, engagement feature 70 of the ring 42. In various embodiments, the ring 42' and the member 58 are removably attached to the workpiece holder 18".

The backing member 62 can be a plate or a push plate, and can include at least one push pin 74. In various embodiments, the backing member 62 can have a circular shape, a substantially circular shape, or be non-circular. In various embodiments, the backing member 62 can be a ring or a plate. The backing member 62 can be formed from a metal, a plastic, or a polymer material. The bladder 66, which can be a pneumatic bladder, defines a cavity 78 that can be filled with a fluid, such as air, to inflate the bladder 66. When inflated, the bladder 66 pushes against the backing member 62 causing the at least one push pin 74 to contact the member 58, which causes the member to flex. The bladder 66 can have a circular shape, a substantially circular shape, or be non-circular, and, in various embodiments, can be a ring or a plate. In various embodiments, the bladder 66 can be formed from a fluoroelastomer, urethane, or mylar material.

FIGS. 5 and 6 show exploded views of another exemplary workpiece holder 18'" for retaining the workpiece 30. FIG. 5 shows the view from a first perspective, and FIG. 6 shows the view from a second perspective. This embodiment of the workpiece holder 18'" includes the ring 42', the groove 54, the backing member 62, and the bladder 66. The workpiece holder 18'" can also include a handle 34' and a member 58'.

The workpiece holder 18'" shown in FIGS. 5 and 6 also includes a body 38", which can include a guide strip 82. In one embodiment, the recess 50 defined in the body 38" includes multiple contact points 46 for providing support to the workpiece 30. In the illustrated embodiment, the body 38" includes at least one port 86 for providing a fluid to the bladder 66 and/or vacuum to the underside of the ring 4T via ducts (not shown) in the body 38". In various embodiments, the body 38" can also include at least one electrical contact 90 to communicate electrical current to the workpiece 30. The backing member 62 can be connected to a stud 92 that is engageable with the body 38". The stud 92 provides a force to contact the backing member 62 to the member 58'.

The ring 42' illustrated in FIG. 6 includes at least one engagement feature 70, which, in one embodiment, is formed as one or more studs. A sealing groove 94 can circumscribe the outer perimeter of the ring 42'. The sealing groove 94, which can be an elastomer region of the ring 42', can mate with a sealing boss 98 that can circumscribe a perimeter of the workpiece holder 18'". In one embodiment, this mating forms a barrier to fluid entry, e.g., a fluid-tight seal, between the workpiece holder 18'" and the ring 42'.

In various embodiments, the ring 42' also includes an inner sealing surface 102 that can form a barrier to fluid entry with the workpiece 30. The inner sealing surface 102 can form an electrical connection with the workpiece 30 as well. For example, the inner sealing surface 102 can include flexure fingers that contact the workpiece 30. The flexure fingers can include exposed terminal tips for making electrical contact. The electrical current path can carrying up to 75 amps of electrical current to the workpiece surface and can allow for independent electrical current control to a plurality of workpieces.

In various embodiments, the inner sealing surface 102 can include an elastomer region that is deflected under sufficient force to form a barrier to fluid entry.

In some embodiments, the member 58' defines at least one retaining feature 110 and at least one flex feature 114. The member 58' can include at least one tab section 118. The features of the member 58' can be cut, e.g., laser cut, into the member 58'. The at least one retaining feature 110 can be engageable with the at least one engagement feature 70 of the ring 42'. In various embodiments, the at least one retaining feature 110 can be a keyhole slot or a capture slot cut into the member 58'. In one embodiment, the at least one flex feature 114 has a ram's head shape.

In one embodiment, the member 58' defines a plurality of flex features 114. In combination, the plurality of the flex features 114 can provide an effective long path around the main body 122 of the member 58' to allow for substantial flexing of the member 58'. In one embodiment, the plurality of flex features 114 can provide a force at least substantially uniformly around the perimeter of an object, e.g., a workpiece 30, when the member is flexed. The force can be provided substantially normal to the plane of the member 58'. When the force is applied, the ring 42' can retain the object. The flex feature(s) 114, in this embodiment or in other embodiments, can be formed about a perimeter of the member 58', e.g., an inner perimeter, an outer perimeter, or on both the inner and outer perimeters.

In some embodiments, the groove 54, e.g., a ring shaped cavity defined in the body 38", can include at least one tooth feature 126 that can engage at least one tab section 118 of the member 58'. When a plurality of tab sections 118 are flexed away from the main body 122, a force arises between the tab sections 118 perpendicular to the plane of the workpiece 30.

Referring to FIGS. 5 and 6, the ring 42' and the member 58' can be removably attached to the workpiece holder 18'". In one embodiment, one or more engagement features 70 of the ring 42' can be engaged by (e.g., inserted or attached) one or more retaining features 110 of the member 58'. In an embodiment using keyhole slots, for example, the ring 42' can be rotated by several degrees until the engagement feature(s) 70 stop against the narrower end of the retaining feature(s) 110. This causes the shoulder of the engagement feature(s) 70 to lie behind the member 58'. The bladder 66 can then be partially or entirely deflated. Flexure force formed by the flex features 114 causes the member 58' to deflect and pull against the one or more engagement features 70. In this embodiment, this pulls the ring 42' toward the workpiece holder 18'".

In one embodiment, flexing a member provides a force to at least one engagement feature to cause a ring to form a barrier to fluid entry with a workpiece. For example, the force can cause the member 58' to pull the at least one engagement feature 70 of the ring 42' to cause it to push against the workpiece 30 to form the barrier to fluid entry. The at least one flex feature 114 can be adapted to provide the force substantially normal to the plane of the member 58'

to form the barrier. The flex feature **114** can be positioned about a perimeter of the member **58'** to provide the force at least substantially uniformly from the perimeter (e.g., an inner perimeter, an outer perimeter, or as shown in FIGS. **5** and **6**, both the inner and outer perimeters.) The force deforming the member **58'** can be about one kilogram per linear centimeter of the ring's **42'** perimeter.

To remove a first workpiece from the workpiece holder or to exchange a first and second workpiece, the force between the member **58'** and the ring **42'** can be removed by inflating the bladder **66** so that the backing member **62** contacts the member **58'** (with or without push pins **74**) to deform it. The force engaging the engagement feature(s) **70** is relaxed so that they can be disengaged from the retaining feature(s) **110**. In one embodiment, the force engaging the engagement feature(s) **70** is relaxed so that the ring **42'** can be rotated and moved away from the workpiece holder **18'''**. The first workpiece can be removed from the ring **42'**, and if desired, a fresh workpiece can be disposed on the ring **42'**.

In one embodiment, the fluid seal can hold the workpiece with sufficient force to prohibit fluid intrusion even when all power to the processing system is lost due to an unforeseen event. In one embodiment, the barrier to fluid entry can be tested after a workpiece loading procedure and/or prior to processing a workpiece to ensure a workpiece has been properly loaded. For example, a small vacuum, e.g., about minus 0.05 atm, is applied to the cavity of the workpiece holder **18'''**. The vacuum can be applied, for example, to the recess **50**. The path to the vacuum can then be closed off, and the leak-up rate of the vacuum can be measured. If the vacuum in the workpiece holder **18'''** does not change by more than a prescribed amount over a defined time period, then the integrity of the barrier is considered to be verified (e.g., about 10 percent in less than about 5 seconds). If the vacuum changes at a faster rate, the ring **42'** may not be mounted properly, and the workpiece can be unloaded and reloaded.

FIG. **7** shows a detailed view of a portion **128** of the member **58'**, including retaining features **110**, flex features **114**, and tab sections **118**. As illustrated, the member **58'** defines lines **130** and **134** extending about the inner and outer perimeters of the member **58'**, respectively. The lines **130** and **134** are cut at least substantially through the main body **122**. In one detailed embodiment, the lines **130** and **134** are cut through the main body **122**. The lines do not extend continuously about the perimeters. Instead, the lines **130** and **134** are series of distinct lines. For example, line **130***a* extends from a first retaining features **114***a* to an adjacent flex features **114***b*. The line **130***a* terminates in the two tear-drop shaped regions **138***a* and **138***b* defined in the flex features **114***a* and **114***b*, respectively. According to the illustrated embodiment, the flex feature **114**, **114***a* or **114***b* also includes an Ω-shaped line **142**. In one embodiment, two proximate tear-drop shaped regions and an Ω-shaped line combine to form an individual flex feature. The flex feature can have a ram's head shape.

In one embodiment, using a series of distinct lines can provide a substantially long path around a perimeter of the member along which the member can be flexed. Furthermore, using a series of distinct lines can promote an at least substantially uniform force from the perimeter.

In various embodiments, the tab sections **118** include a notch **146**. In one embodiment, the notch **146** interfaces with a corresponding catch in a groove **54** of the workpiece holder. The notch **146** can prevent the member **58'** from rotating. The member **58'** can include outer tab sections **148**, which can be used to retain the member **58'** in the workpiece holder.

The movement of the member **58** or **58'** and the action of the flex feature(s) **114** can be shown diagrammatically. For illustrative purposes and without being bound to theory, FIGS. **8**A-**8**C show diagrammatic representations.

FIG. **8**A shows the member **58** or **58'** in a relaxed state. Plate **150** and springs **154** represent the member **58** or **58'**. The flex feature(s) **114** can act like springs **154** to apply force. Anchor points **138** represent restraining features of a workpiece holder. For example, the anchor points **138** can be the tooth feature(s) **126** formed in the groove **54** of the workpiece holder. The anchor points **138** can restrain the tabs sections **118** of the member **58** or **58'**.

FIG. **8**B shows a portion of the ring **42** or **42'**, including the engagement feature **70** (shown as a stud in FIGS. **8**B and **8**C). A force **162** is applied to the plate **150** (i.e., the member **58** or **58'**) to flex the member **58** or **58'** into an overextended state. When overextended, engagement between the ring **42** or **42'** and the member **58** or **58'** can be made (e.g., in one embodiment, the retaining feature captures the engagement feature). In a detailed embodiment, engagement occurs between the engagement feature **70** and the retaining feature **110**. In one embodiment, the force **162** is applied by the backing member **62**. The springs **154** (i.e., the flex features **114**) exert a force **166** in substantially the opposite direction as the force **162**.

FIG. **8**C depicts the apparatus in a state where the member **58** or **58'** is applying the force **166** to the engagement feature **70** via its retaining feature **110**. The springs **154** exert the force **166** substantially normal to the plane of the member **58** or **58'**. In one embodiment, the force **166** causes the member **58** or **58'** to pull the engagement feature **70**, which causes the ring **42** or **42'** to contact the workpiece **30**. This contact can form a barrier to fluid entry between the workpiece **30** and the ring **42** or **42'**.

FIG. **9** depicts another exemplary embodiment of a workpiece holder **170**. This embodiment can be used to process a plurality of surfaces of the workpiece **30**. The workpiece holder **170** includes a ring **42** for retaining the workpiece. The body **174** of the workpiece holder **170** defines a hole **178** bored through from a first surface **182** to a second surface **186**. The diameter of the hole **178** is smaller than the diameter of the ring **42**. In various embodiments, the workpiece holder **18'''** includes the features described above including, but not limited to, the member **58** or **58'**, the backing member **62**, and the bladder **66**. The underside of the workpiece **30** and the edge of the hole **178** can form a seal to isolate these components from the fluid used in the fluid processing.

FIG. **10** shows an exemplary apparatus for processing (e.g., fluid processing) a workpiece. The apparatus can include a module **22**, which itself can include a housing **200**. In one embodiment, the module **22** contains a fluid, e.g., the housing **200** defines a cavity in which the fluid can be disposed. As illustrated in FIG. **10**, the apparatus also includes an embodiment of the workpiece holder **18**, a member **204**, a plate **208**, and an anode **212**. In some embodiments, one or more of these elements are not used or are not present. Variations are described in more detail below. In various embodiments, the member **204**, the plate **208** and/or the anode **212** are disposed within the module **20** and/or the housing **200**. Because of the modular design, these elements can be removably or fixably disposed within the housing **200**.

In FIG. **10**, the workpiece holder **18** is shown removed from the housing **200**. The workpiece holder **18** need not be integrated with the module **22** or the housing **200**. In one detailed embodiment, the workpiece holder **18** is removable from the housing **200**. The workpiece holder **18** can be transportable between two or more modules **22**. The housing **200** can include grooves defined in the inner surface of two opposing sides. The edges **44** of the workpiece holder **18** or the guide strips **82** of the workpiece holder **18'''** can be inserted into the grooves.

An exemplary housing **200** can be less than about 180 mm in length for electrodeposition or electroetch applications. For applications that do not require a plate **208** or an anode **212**, the length can be about 75 mm. The width of the housing **200** can be between about 300 mm and about 500 mm. In an exemplary embodiment for a 200 mm workpiece, the module dimensions can be about 180 mm by 400 mm, although the dimensions can vary depending on the application and/or workpiece size.

In various embodiments, the member **204** is a paddle assembly or a fluid agitation paddle. In one detailed embodiment, the member **204** is a SHEAR PLATE agitation paddle. The member **204** can be moved substantially parallel to a surface of a workpiece being retained by the workpiece holder **18**. The member **204** can be moved with a non-uniform oscillatory motion to agitate the fluid. In various embodiments, the oscillation frequency of the member **204** can be between about 0 Hz and about 20 Hz, although the frequency can be higher depending on the application. In one embodiment, the oscillation frequency of the member **204** is between about 4 Hz and about 10 Hz. In one detailed embodiment, the oscillation frequency is about 6 Hz.

In some embodiments, the member **204** is moved by one or more motors **216**. The member **204** can be connected to the motor(s) **216** using connection rods **220**. In one detailed embodiment, the motor(s) **216** are linear drive motors or a linear motor assembly. Suitable linear motors include linear drive motors available from the LinMot Corporation in Delavan, Wis. In various embodiments, the motors **216** can be fixably or removably attached to the housing **200**. The motors **216** can be positioned on the center plane of the housing **200**. In one detailed embodiment, the weight of the member **204** and the inertial forces incurred during reciprocating motion of the member **204** is supported by the linear motors via the magnetic field forces between the motor slider and the motor windings rather than by mechanical bearings. The one or more motors **216** can be computer controlled.

In various embodiments, the plate **208** can be a shield plate or shield assembly. The plate **208** can be used to shape the electric field incident on a surface of a workpiece being retained by the member **204**. The plate **208'** can be formed from a non-conducting materials. Suitable materials include, but are not limited to, HDPE and PVDF. In various embodiments, the plate **208** can have a circular shape, a substantially circular shape, or be non-circular (e.g., rectangular, square, oval, or triangular, or have another suitable geometric configuration). A feature of the plate **208** is that it can be removed and replaced with little effort. This allows a single module to be configurable for processing different sized workpieces with minimal lost production time.

In one embodiment, the anode **212** forms the outer wall of the housing **200**. In one embodiment, the anode **212** can be a component of an anode assembly, which forms the outer wall of the housing **200**. In various embodiments, the housing **200** has an outer wall and either the anode **212** or the anode assembly are removably attached the wall or spaced from the wall.

In various embodiments, the anode **212** can be a copper disk. In one embodiment, the exposed surface area of the anode **212** is about 300 cm^2. In one embodiment, the anode **212** is consumed during electrodeposition or another fluid process such as copper or solder deposition. One feature of the anode **212** is that it can be removed and replaced with little effort, minimizing lost production time.

In embodiments using an anode **212**, the workpiece surface serves as the cathode. It is noted that in some embodiments, it is preferred that the polarity of the system is reversed. That is, the workpiece surface is controlled to be anodic relative to a cathode placed in the module **22**. In such an embodiment, the anode **212** would be replaced by a cathode.

FIG. **11** shows cross-section of another exemplary embodiment of an apparatus for processing a workpiece. This embodiment can be used, for example, to process two workpieces simultaneously. A housing **200'** includes a side wall **224** and end walls **226**, and the relative positioning of members **202**, members **204*a*** and **204*b***, plates **208** and anodes **212** is shown. These elements or the distances are not shown to scale. Although the members **204*a*** and **204*b*** are shown as two separate structures, they can form a single assembly.

In an embodiment of the housing **200'** for fluid processing, fluid enters the housing **200'** through at least one port **228** in a bottom wall of the housing **200'**. The port **228** can, in some embodiments, be located in a center portion of the bottom wall **230** of the housing **200'**. In one embodiment, the port **228** can be positioned in a bottom portion of a side wall **224**. The fluid flows up along the surfaces of the one or more workpieces. The fluid can flow between the workpiece holder **18** and the respective member **204**, **204*a***, or **204*b*** or between the workpiece holder **18** and the plate **208**. In various embodiments, the fluid exits the housing **200'** through the top of the housing, through a top portion of a side wall **224**, or through a top portion of an end wall **226**. Arrows show the general direction of flow.

In various embodiments, the flow rate can be between about 20 liters per minute and about 40 liters per minute. In one detailed embodiment, the flow rate is about 28 liters per minute. In one embodiments, the fluid is an electrolyte. The electrolyte can be circulated through the housing **200'** from a reservoir during the process. The turnover rate can be about 0.8 minutes at a flow rate of about 27.6 liters per minute. An exemplary solution can include copper sulfate, water, sulfuric acid, and hydrochloric acid.

The distance between a workpiece **30** and the respective member **204**, **204*a***, or **204*b*** can be about 1 mm and about 5 mm, although the distance can vary depending on the application. In one embodiment, the member **204**, **204*a***, or **204*b*** is positioned less than about 2 mm from the surface of the workpiece **30**. The shorter the distance between the elements, the better is the fluid mixing at the surface. In a detailed embodiment where the ring **42** extends about 1 mm from the outer surface of the workpiece, the member **204**, **204*a***, or **204*b*** can move in a plane about 1.5 mm from the surface of the workpiece **30**. The plate **208** can be positioned between about 2 and about 20 mm from the surface of the workpiece **30**, although the distance can vary depending on the application. In one detailed embodiment, the plate **208** is positioned about 5 mm from the workpiece surface.

FIG. **12** depicts a perspective view of an exemplary embodiment of a member **204'** for agitating a fluid during

fluid processing of a workpiece. The member **204'** includes a first plate **232** and a second plate **234**. Each plate **232** and **234** defines a series of spaced openings **236**. The shape of the spaced openings **236** can be, for example, oval or rectangular. Each plate **232** and **234** can also include a series of spaced blades **240** for agitating the fluid. The profile of the spaced blades **240** can be straight, angled, cup-shaped, or square. The center points of the series of spaced openings **236** or the series of spaced blades **240** can be positioned in a substantially equidistant periodic array. For example, the centers can be positioned with about 10 to about 30 mm between them. In one detailed embodiment, the centers are position about 20 mm apart.

In one embodiment, the series of spaced openings **236** agitates the fluid when the member **204'** is moved. In one embodiment, the series of spaced blades **240** agitates the fluid when the member **204'** is moved. In one embodiment, both the openings **236** and the blades **240** agitate the fluid. In one detailed embodiment, an edge surface of a spaced blade **240** agitates the fluid.

The plates **232** and **234** can be formed from a suitable metal, plastic, or polymer. Suitable metals include titanium, stainless steel, or aluminum. Suitable plastics include polyvinyl chloride (PVC), chlorinated PVC (CPVC), HDPE, and PVDF. In various embodiments, either of the plates **232** and **234** can be positioned between about 2 mm and about 10 mm from the surface of the workpiece, although smaller or larger distances can be used depending on the application. In a detailed embodiment, the thickness of at least one of the plates **232** and **234** is between about 3 mm and about 6 mm, although smaller or larger distances can be used depending on the application and/or the construction of the material. Relatively thin pieces can be used so that the plate **208** can be positioned as close to the workpiece as possible. This improves the uniformity of deposition.

The first and second plates **232** and **234** can be joined by one or more spacer features **244** and to form the member **204'**. In FIG. **12**, the first and second plates **232** and **234** are shown attached to the spacer features **244** by screws **248**, although other means may be used, including, but not limited to, rivets, glues, epoxies, adhesives, or outer suitable attachment means. The plates **232** and **234** and the spacer features **244** can define a cavity in which an embodiment of the workpiece holder **18** can be inserted during processing. The spacer features **244** can facilitate alignment of the member **204'** to the workpiece holder **18**.

In various embodiments, the member **204** or **204'** can be aligned to the workpiece holder **18** by the housing **200** in a manner that offers high precision without requiring mechanical support of the member **204** or **204'**. As described above, the motors **216** can support the member **204** or **204'**. Precise and consistent separation between the member **204** or **204'** and the workpiece holder **18** can be achieved using guide wheels (not shown) mounted on the housing **200**. The guide wheels can turn freely on an axle that is securely mounted on a side wall of the housing **200**. Alignment wheels can also be mounted the housing **200** for positioning the workpiece holder **18**. The relationship between the guide wheels and the alignment wheels can be such that the member **204** or **204'** to the workpiece surface is consistent to within less than about ¼ mm. This promotes a substantially uniform fluid boundary layer to occur at the workpiece surface when the member **204** or **204'** is moved substantially parallel to the workpiece surface.

The axles for guide wheels can serve as journal bearing shafts. The member **204** or **204'** can be moved with virtually zero frictional or bearing forces, which can significantly reduce repair and maintenance costs that are associated with systems that use load bearing frictional surfaces or bearings.

FIG. **13** shows a cross-section of another exemplary embodiment of a member **204"** for agitating a fluid during fluid processing of a workpiece. The spaced blades **240'** have a cup shape. In FIG. **13**, the spaced bladed **240'** are shown adjacent the workpiece **30** being retained on the workpiece holder **18** using the ring **42**. In various embodiments, the series of spaced openings **236** and/or the series of spaced blades **240'** agitate the fluid when the member **204"** is moved. In one embodiment, an edge surface of a spaced blade **240'** agitates the fluid. In this embodiment, the edge surface can be a side surface, a pointed surface, or a rounded surface.

FIG. **14** shows a cross-section of another exemplary embodiment of a member **204'"**. The spaced blades **240"** have an angled profile, and are shown adjacent the workpiece **30** being retained on the workpiece holder **18** using the ring **42**. In various embodiments, the series of spaced openings **236** and/or the series of spaced blades **240"** agitate the fluid when the member **204"** is moved.

As described above, the member **204**, **204'**, **204"** or **204'"** (referred to herein collectively as **204***x*) can be used to agitate the fluid. In some embodiments, the member **204***x* can be moved using a non-uniform oscillation profile. In one exemplary embodiment, the non-uniform oscillatory motion includes a reversal position that changes after each stoke of the non-uniform oscillatory motion.

For example, referring to FIG. **15**, a blade **240**, **240'**, or **240"** or a center point of a spaced opening **236** (referred to herein collectively as a center point **252**) adjacent a particular workpiece point **256** on a surface of the workpiece **30** need not return to the same workpiece point **256** after one complete oscillation stroke. The center point **252** can travel along the surface of the workpiece **30** as the member **204***x* oscillates, and after one complete oscillation stroke, the center point **252'** can be at a nearby workpiece point **260**.

In one embodiment, the non-uniform oscillatory motion includes a primary oscillation stroke and at least one secondary oscillation stroke. The length of the primary oscillation stroke can be substantially the same as the separation of the spaced openings **236** defined by the member **204***x*. In one detailed embodiment, the length of the primary oscillation stroke can be substantially the same as the separation of adjacent spaced openings **236**.

Referring to FIG. **16**, an exemplary primary oscillation stroke **264** can change a reversal position of an oscillation stroke of the member **204***x*. In one detailed embodiment, the primary oscillation stroke **264** changes a reversal position **268** of the center point **252** of the member **204***x*. An exemplary first secondary oscillation stroke **272** can change a reversal position of an oscillatory motion of the member **204***x*. In one detailed embodiment, the first secondary oscillation stroke **272** changes a reversal position **276** of the center point **252**. In various embodiments, this can also be understood as changing a reversal position of the primary oscillation stroke **264**. An exemplary second secondary stroke **280** can change a reversal position of an oscillatory motion of the member **204***x*. In one detailed embodiment, the second secondary stroke **280** changes a reversal position **284** of the center point **252**. In various embodiments, this can also be understood as changing a reversal position of the first secondary oscillation stroke **272**.

As illustrated, a center point **252** is used to show the relative motion of the member **204***x*. Any point X along the surface of the member **204***x*, though, can be used to show the change in reversal position of that point X as the member

204*x* moves. In some embodiments, the member can be formed from a plurality of pieces. Each piece includes one or more spaced openings or one or more spaced blades. In one embodiment, each piece can be connected to a separate motor so that its motion is independent of a proximate piece. In one embodiment, each piece can be connected to the same motor so that the pieces move in concert. In some embodiments, the plurality of pieces is positioned on the same side of a workpiece so that the motion of two or more pieces of the member **204***x* agitates the fluid.

FIG. **17** shows a graphical representation of an exemplary non-uniform oscillation profile **288** for agitating a fluid during fluid processing of a workpiece. The exemplary workpiece **30** and center point **252** in FIGS. **15** and **16** are referenced for illustrative purposes. The position of the center point **252** of the member **204***x* relative to the workpiece point **256** on the surface of the workpiece **30** is plotted versus time. In this embodiment of the member **204***x*, the separation of the center points **252** is about 20 mm. The primary oscillation stroke is substantially the same as the separation between the center point **252** and an adjacent center point of the member **204***x*. The secondary oscillation stroke is about 40 mm. Line **292** shows the relative travel of the center point as a result of the primary oscillation stroke. Line **296** shows the relative travel of the center point as a result of the secondary oscillation stroke. As can be seen in FIG. **17**, the line **296** extends substantially through the center of each stroke, with a center of each stroke offset with respect to each previous and succeeding stroke, thereby demonstrating the continuous nature of the change of each oscillation (from oscillation to oscillation) and also the change within each oscillation (from one stroke of an oscillation to a next stroke or return stroke of an oscillation) as discussed further below. As may be realized from FIG. **17**, the resultant non-uniform oscillation profile is formed by a series of oscillations with each consecutive oscillation in the series being asymmetric. In other words, as shown in FIG. **17**, the strokes of one oscillation are offset from each other, and moreover, the strokes of an oscillation are offset from strokes of adjacent oscillations. More particularly, as shown in FIG. **17**, an oscillation includes a first stroke **288***b* and an opposing second stroke or return stroke **288***d*. Further, the first stroke **288***b* includes a starting point **288***a* and an ending point **288***c*, and the opposing or return second stroke **288***d* includes a starting point **288***c* and an ending point **288***e*. The ending point for the first stroke corresponds to the starting point of the second stroke (or return stroke) and thus also provides a reversing position **288***c* for the oscillation. As also shown in FIG. **17**, the oscillation itself is asymmetrical in that the first stroke **288***b* is not symmetrical to the second or return stroke **288***d* about the reversing position **288***c* as is apparent from the fact that, within one oscillation, the starting point **288***a* for the first stroke is offset from the ending point for the second stroke **288***e*. As can also be seen, each of the succeeding reversal points of successive oscillations is offset from that of respective adjacent oscillations.

By using a combination of primary and secondary strokes, the reversal position of the oscillation pattern in front of the workpiece **30** can change sufficiently relative to the process time. This can preclude a non-uniform time averaged electric field or fluid flow field on the surface of the workpiece. This can minimize an electric field image or a fluid flow image of the member on the surface of the workpiece, which improves the uniformity of a deposition.

FIG. **18** shows a graphical representation of another exemplary non-uniform oscillation profile **300** for agitating a fluid during fluid processing of a workpiece. In this embodiment of the member **204***x*, the separation of the center points **252** is about 20 mm. The primary oscillation stroke is substantially the same as the separation between the center point **252** and an adjacent center point of the member **204***x*. The first secondary oscillation stroke is about 30 mm. The second secondary oscillation stroke is about 40 mm. The oscillatory motion can include additional secondary oscillation strokes. Line **304** shows the relative travel of the center point as a result of the primary oscillation stroke. Line **308** shows the relative travel of the center point as a result of the first secondary oscillation stroke. Line **312** shows the relative travel of the center point as a result of the second secondary oscillation stroke. As is apparent from FIG. **18**, with this profile, not only are there successive changes in reversal positions and starting/end point positions of the oscillations, but also, a plurality of oscillations form successive cycles of oscillations, with each successive cycle having a maximum **300***a*, **300***b*, **300***c*, **300***d*, **300***e*. As can be seen in FIG. **18**, for each maximum, immediately preceding and succeeding reversal positions are lower than the maximum, thereby demarcating the maximum of a given cycle. As also shown in FIG. **18**, the maximum reversal positions for each cycle are also offset with respect to each other, with the maximum reversal position **300***a* offset from the maximum reversal position **300***b* of an adjacent cycle of plural oscillations. The maximum **300***b* is, in turn, offset from the maximum reversal position **300***c* of the next cycle of plural oscillations, with successive cycles having respective maximum reversal positions **300***d*, **300***e* which are offset from the maximum reversal position of an adjacent cycle. Thus, the arrangement of FIG. **18** provides a further modification in that, in addition to having strokes of an oscillation and adjacent oscillations being offset (as in FIG. **17**), a plurality of oscillations form a cycle, with one cycle of oscillations differing from an adjacent cycle of oscillations as is apparent from their maximum reversal positions being offset from one another.

The period of the first secondary oscillation stroke is about 2 seconds, and the period of the second secondary oscillation stroke is about 10 seconds. This can move the position at which the oscillation reversal occurs, which can spread the reversal point of each spaced blade or the center point of each spaced opening by about 0.1 mm. This can reduce or substantially eliminate any imaging of the reversal position onto the workpiece surface.

Oscillation of the member **204***x* can also form a non-periodic fluid boundary layer at the surface of the workpiece **30**. In one embodiment, the member **204***x* reduces fluid boundary layer thickness at the surface of the workpiece **30**. In one detailed embodiment, the fluid boundary layer thickness is reduced to less than about 10 μm. Furthermore, motion of the member can reduce or substantially eliminate entrapment of air or gas bubbles in the fluid from the surface of the workpiece **30**. In one detailed embodiment, fluid flow carries the air or gas bubbles near a growing film surface in a housing **200** for plating or depositing.

FIG. **19** illustrates a graphical representation of boundary layer thickness at a surface of a workpiece versus fluid agitation rate. The fluid agitation rate can be the oscillation rate of the member **204***x*. As illustrated, the fluid boundary layer thickness is reduced from about 55 μm to less than about 10 μm as the rate is increased. The boundary layer thickness can be derived from limiting current measurements, which can be determined by comparison to known behavior of a reference electrode, by linear sweep voltammetry, or by chronoamperometry. Fluid mixing is inversely proportional to the boundary layer thickness. Therefore,

decreasing the boundary layer in a fluid process can improve fluid mixing at a workpiece surface. This can improve throughput and uniformity, and can also decrease materials consumption.

FIG. **20** depicts an exemplary embodiment of a plate **208'** for varying an electric field during processing of a workpiece **30**. Varying the electric field at the workpiece surface can promote uniform deposition of a film, although the electric potential drop through the workpiece surface varies from the workpiece perimeter to the workpiece center. In one embodiment, the plate **208'** is fabricated from a non-conducting material that can block the electric field as it passes from the plane of the anode **212** to the plane of surface of the workpiece **30**. The plate **208'** has a substantially circular shape. The plate **208'** can include fastening holes **314** for connecting the plate **208'** to the housing **200** or **200'**, or to a support feature (not shown) that suspends the plate **208'** in the housing **200** or **200'**.

In one embodiment, the plate **208** (shown in FIGS. **10** and **11**) or **208'** (shown in FIG. **20**) shapes the electric field incident on a surface of the workpiece **30**. A body **316** of the plate **208** or **208'** can define a plurality of holes **320**. The holes **320** can have a distribution of hole sizes, e.g., the diameter of the holes can vary on a surface of the plate. By varying the distribution of hole sizes, the average open area of a surface of the plate **208** or **208'** can be varied, and a property of the electric field passing through the plate **208** or **208'** to the surface of the workpiece **30** can be varied. The property of the electric field that is varied can be amplitude or potential. In various embodiments, the electric field proximate to the surface of the workpiece can be uniform.

In one embodiment, the distribution of hole sizes comprises a continuous gradient of hole size. In one detailed embodiment, the holes vary in a substantially radial pattern. For example, as illustrated in FIG. **20**, larger holes can be formed near the center of the plate **208'** while smaller holes are formed closer to the outer perimeter of the plate **208'**. In various embodiments, the plate can have between about 500 and about 10,000 holes, although more or fewer holes can be used depending on the application and/or the workpiece size. In one embodiment, the plate can have between about 1,000 and about 5,000 holes. In one detailed embodiment, the plate **208** or **208'** can have about 3000 holes and be suitable for a 200 mm workpiece. In various embodiments, the diameter of the holes is between about 0.1 mm and about 20 mm, although larger and smaller diameter holes can be used depending on the application. In one embodiment, the largest diameter holes can be about 5 mm in diameter. The smallest diameter holes can have a diameter of about 1 mm.

FIGS. **21**A and **21**B show an illustrative embodiment of a loading station **14'**, which can be used to load one or more workpieces **30** on an embodiment of the workpiece holder **18**. FIGS. **21**A and **21**B include a holder **324** for the workpiece holder **18**, a base member **328** for moving a workpiece **30**, and an arm **332** connecting the holder **324** and the base member **328**. FIG. **21**B shows workpieces **30** loaded onto the base member **328**. The arm **332** and the holder **324** can include a hinged connection **336** so that the arm **332** can move the base member **328** between a substantially horizontal position and a substantially vertical position, or to an intermediate position. The base member **328** and the arm **332** can be components of the same piece.

The holder **324** can retain the workpiece holder **18** while workpieces **30** are being loaded onto or removed from the workpiece holder **18**. In some embodiments, the holder **324** can retain the workpiece holder **18** while workpieces **30** are being loaded onto or removed from the base member **328**. The holder **324** can be a suitable metal, plastic, or polymer material. A second end effector (not shown) can be used to load a workpiece **30** onto the base **328**. The loading station **14'** can be coupled to a hydraulic mechanism and/or a computer to control the position of the arm **332**.

In various embodiments, the base member **328** can include an end effector **340** positioned in the central portion of the base member **328** and a chuck **344** positioned around the outer perimeter of the base member **328**. The end effector **340** can be a Bernoulli end effector, an electrostatic chuck, or a vacuum end effector. The end effector **340** can retain a workpiece **30** without contacting it. In some embodiments, the chuck **344** is a vacuum chuck or a suction chuck. The chuck **344** can retain the ring **42** on the base member **328**. In one embodiment, the end effector **340** can retain the workpiece **30** against the ring **42** while the workpiece **30** is loaded onto or removed from the workpiece holder **18**. In one embodiment, the end effector **340** can retain the workpiece **30** against the ring **42** without contacting the workpiece **30**.

In one embodiment, to load a workpiece **30** onto the workpiece holder **18**, the ring **42** is engaged by the chuck **344**. The workpiece **30** can be placed on the ring **42**. The end effector **340** can be activated to hold the workpiece **30** against the ring **42**. The arm **332** can be moved to a substantially vertical position. The workpiece holder **18** can engage the ring **42**. The end effector **340** can be disengaged from the workpiece **30**, and the chuck **344** can be disengaged from the ring **42**. The arm **332** can be moved from the plane of the workpiece holder **18** so that there is clearance. The workpiece holder **18** can be removed from the holder **324** and directed to a module for processing. The steps need not be completed in this order to load the workpiece **30**.

In one embodiment, to remove a workpiece **30** from the workpiece holder **18**, the arm **332** can be moved to a substantially vertical position. The end effector **340** can engage the workpiece **30**, and the chuck **344** can engage the ring **42**. The ring **42** is disengaged from the workpiece holder **18**. The arm **332** can be moved to a substantially horizontal position. The steps need not be completed in this order to remove the workpiece **30**.

The loading station **14'** can load a single workpiece **30** to a workpiece holder **18**, or can load a plurality of workpieces **30** to a workpiece holder **18**. In one embodiment, two workpieces are loaded onto the workpiece holder **18** substantially concurrently. In one embodiment, two workpieces are removed from the workpiece holder **18** substantially concurrently. In some embodiments, a first workpiece is loaded onto or removed from the workpiece holder **18** before a second workpiece is loaded or removed.

While the invention has been particularly shown and described with reference to specific illustrative embodiments, it should be understood that various changes in form and detail may be made without departing from the spirit and scope of the invention as defined by the appended claims. For example, although specific actions, movements, and processes may be described with reference to specific embodiments, these actions, movements, and processes may be performed by any embodiment employing like or similar features. Likewise, although the invention, in some embodiments, is described as a system employing individual features, some of the features can be utilized independent of the system.

The invention claimed is:

1. An apparatus for fluid processing a workpiece, comprising:

an agitation system configured to be disposed within a fluid processing system adjacent a workpiece holder and agitate a fluid in said fluid processing system for treating microelectronic workpieces, said agitation system comprising a fluid agitation member having at least one fluid agitation hole therein;

an agitation drive system comprising a motor operatively connected to said agitation member; and

a controller operatively coupled to said agitation drive system, and programmed to effect movement of said agitation member relative to and substantially parallel with a workpiece supporting surface of said workpiece holder with an oscillatory motion, the oscillatory motion being a series of substantially continuous oscillations, wherein each consecutive oscillation of the series includes a first stroke and an opposing second stroke and wherein the first stroke includes a starting point and an ending point, and the second stroke includes a starting point and an ending point, and the ending point of the first stroke coincides with the starting point of the second stroke to thereby define a reversal position, and further wherein the second stroke is not symmetrical to the first stroke with respect to the reversal position such that each oscillation is asymmetrical, and further wherein the starting point of the first stroke is offset from the ending point of the second stroke,

wherein said agitation member comprises two agitation plates spaced apart from and adjoined to one another by a spacer such that said agitation member together with said two agitation plates form a single assembly, wherein said workpiece holder is configured to include at least a first workpiece and a second workpiece, wherein said workpiece holder is insertable between said two agitation plates such that the first workpiece faces one of said two agitation plates and the second workpiece, arranged in an opposing direction to said first workpiece, faces another of said two agitation plates.

2. The apparatus of claim 1, wherein said agitation member defines a plurality of spaced apart openings.

3. The apparatus of claim 1, wherein said agitation member comprises a plurality of spaced apart blades.

4. The apparatus of claim 3, wherein a cross-sectional profile of at least one of said plurality of spaced apart blades comprises a concave profile.

5. The apparatus of claim 3, wherein a cross-sectional profile of at least one of said plurality of spaced apart blades comprises an angled profile relative to normal incidence at said workpiece supporting surface of said workpiece holder.

6. The apparatus of claim 1, further comprising:

a field-shaping plate disposed adjacent said agitation member, and configured to vary a property of an electric field extending through said field-shaping plate towards said workpiece supporting surface.

7. The apparatus of claim 6, wherein a body of said field-shaping plate defines a plurality of holes, and wherein diameters of said plurality of holes vary across a surface of said field-shaping plate.

8. The apparatus of claim 7, wherein said plurality of holes vary according to a substantially radial pattern extending from a substantially central portion of said field-shaping plate to a substantially peripheral portion of said field-shaping plate.

* * * * *