US009314388B2

(12) **United States Patent**
Patrick

(10) **Patent No.: US 9,314,388 B2**
(45) **Date of Patent: Apr. 19, 2016**

(54) **BODY TRANSPORT APPARATUS**

(71) Applicant: **James E. Patrick**, Plainfield, IL (US)

(72) Inventor: **James E. Patrick**, Plainfield, IL (US)

(73) Assignee: **Sage Products, LLC**, Cary, IL (US)

(*) Notice: Subject to any disclaimer, the term of this patent is extended or adjusted under 35 U.S.C. 154(b) by 0 days.

(21) Appl. No.: **14/810,035**

(22) Filed: **Jul. 27, 2015**

(65) **Prior Publication Data**

US 2015/0359695 A1 Dec. 17, 2015

Related U.S. Application Data

(63) Continuation of application No. 13/302,703, filed on Nov. 22, 2011, now Pat. No. 9,125,777, which is a continuation-in-part of application No. 11/538,211, filed on Oct. 3, 2006, now Pat. No. 8,276,222, which is a continuation of application No. 11/036,413, filed on Jan. 14, 2005, now Pat. No. 7,114,204.

(51) **Int. Cl.**

A61G 7/14	(2006.01)
A61G 7/10	(2006.01)
A61G 1/02	(2006.01)
A61G 7/00	(2006.01)
A61G 7/02	(2006.01)
A61G 7/057	(2006.01)

(Continued)

(52) **U.S. Cl.**

CPC ***A61G 7/1021*** (2013.01); ***A61G 1/02*** (2013.01); ***A61G 7/0005*** (2013.01); ***A61G 7/02*** (2013.01); ***A61G 7/05769*** (2013.01); ***A61G 7/103*** (2013.01); ***A61G 7/1026*** (2013.01); ***A61G 7/1028*** (2013.01); ***A61G 7/1034*** (2013.01); ***A61G 7/1046*** (2013.01); ***A61G 13/102*** (2013.01); *A61G 7/002* (2013.01); *A61G 10/005* (2013.01); *A61G 2007/05784* (2013.01); *A61G 2200/32* (2013.01)

(58) **Field of Classification Search**

CPC A61G 7/14
USPC ..... 5/81.1 R, 81.1 HS, 706–707
See application file for complete search history.

(56) **References Cited**

U.S. PATENT DOCUMENTS

1,970,502	A	8/1934	Hamm
3,667,073	A	6/1972	Renfroe

(Continued)

FOREIGN PATENT DOCUMENTS

GB	2484885 A	5/2012
WO	WO 2009061850 A 1	5/2009
WO	WO 2011028408 A3	3/2011

OTHER PUBLICATIONS

Dionne, Michael, "Bariatric Ergonomics," Treating the Bariatric Patient, (Jan. 6, 2003), Gainesville, Georgia.

(Continued)

Primary Examiner — Fredrick Conley
(74) *Attorney, Agent, or Firm* — Vedder Price P.C.

(57) **ABSTRACT**

A body transport apparatus including an inflatable air mattress with a plurality of air exit holes on the bottom to provide an air cushion when the mattress is inflated and a cover portion connected to the mattress adjacent a perimeter to define an enclosed volume. The cover portion may include a selectively closeable passageway. A flap may be defined in the cover portion that is movable between open and closed configurations. A plurality of hollows may be defined in the cover portion when inflated to define a body contact area that is less than a surface area of the top surface.

7 Claims, 10 Drawing Sheets

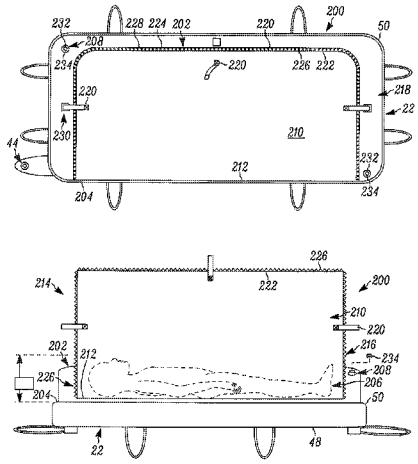

(51) **Int. Cl.**

A61G 13/10	(2006.01)
A61G 7/002	(2006.01)
A61G 10/00	(2006.01)

(56) **References Cited**

U.S. PATENT DOCUMENTS

3,705,429	A		12/1972	Nail
3,739,407	A		6/1973	Stiller
3,760,899	A		9/1973	Crossman et al.
3,948,344	A		4/1976	Johnson et al.
3,959,835	A		6/1976	Nos
4,090,897	A		5/1978	Minick
4,272,856	A		6/1981	Wegener et al.
4,301,791	A	*	11/1981	Franco, III 602/19
4,528,704	A		7/1985	Wegener et al.
4,584,989	A		4/1986	Stith
4,686,719	A		8/1987	Johnson et al.
4,790,051	A		12/1988	Knight
4,837,872	A		6/1989	DiMatteo et al.
4,860,395	A		8/1989	Smith
4,944,060	A		7/1990	Peery et al.
4,962,552	A		10/1990	Hasty
5,044,030	A		9/1991	Balaton
5,048,134	A		9/1991	Dennill et al.
5,065,464	A		11/1991	Blanchard et al.
5,067,189	A		11/1991	Weedling et al.
5,090,077	A		2/1992	Caden et al.
5,121,512	A		6/1992	Kaufmann
5,121,756	A		6/1992	Koledin
5,235,713	A		8/1993	Guthrie et al.
5,487,196	A		1/1996	Wilkinson et al.
5,561,873	A		10/1996	Weedling
5,568,663	A		10/1996	Brown
5,699,570	A		12/1997	Wilkinson et al.
5,742,958	A		4/1998	Solazzo
5,860,174	A		1/1999	Failor
5,960,497	A		10/1999	Castellino et al.
5,996,150	A		12/1999	Blevins et al.
6,021,533	A		2/2000	Ellis et al.
6,073,284	A		6/2000	Borders
6,073,291	A		6/2000	Davis
6,119,292	A		9/2000	Haas
6,295,675	B1		10/2001	Ellis et al.
6,427,270	B1		8/2002	Blevins et al.
6,467,106	B1		10/2002	Heimbrock
6,467,113	B2		10/2002	Ellis et al.
6,484,334	B1		11/2002	Borders et al.
6,598,902	B2		7/2003	Keshavaraj
7,107,641	B2		9/2006	Davis
7,114,204	B2		10/2006	Patrick
7,228,579	B2		6/2007	Tidwell
7,303,705	B2		12/2007	Panton, Jr.
7,650,654	B2		1/2010	Lambarth et al.
2002/0029423	A1		3/2002	Ellis et al.
2002/0166168	A1		11/2002	Weedling et al.
2003/0000017	A1		1/2003	Byerrum et al.
2003/0019042	A1		1/2003	Ellis et al.
2003/0070226	A1		4/2003	Heimbrock
2003/0159212	A1		8/2003	Patrick et al.
2005/0034230	A1	*	2/2005	Weedling et al. ..... 5/81.1 R
2005/0246864	A1	*	11/2005	Arakawa 16/277
2006/0037136	A1		2/2006	Weedling et al.
2010/0005593	A1		1/2010	Bowling et al.
2012/0131746	A1		5/2012	Griffin et al.
2012/0284923	A1		11/2012	Jensen et al.

OTHER PUBLICATIONS

Hovermatt, A D.T. Davis Enterprise, "Patient Handling Technologies, Specializing in Patient Handling & Workers Comp Reduction Programs," (Oct. 1, 2000), Allentown, Pennsylvania.

Plexus Medical, "Low Air Loss/APM Therapy System Operating Instructions," Feb. 2, 2000.

* cited by examiner

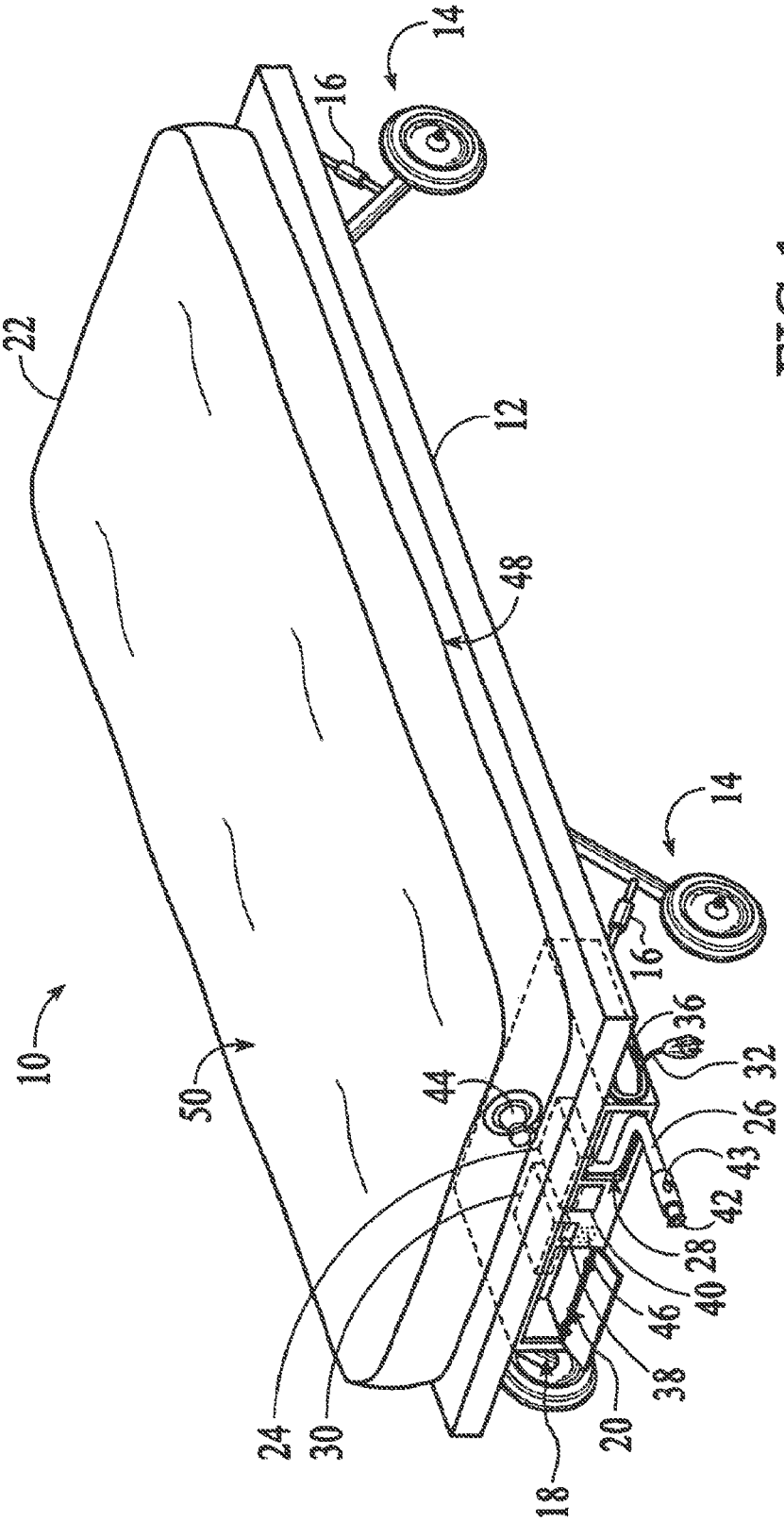

FIG.1

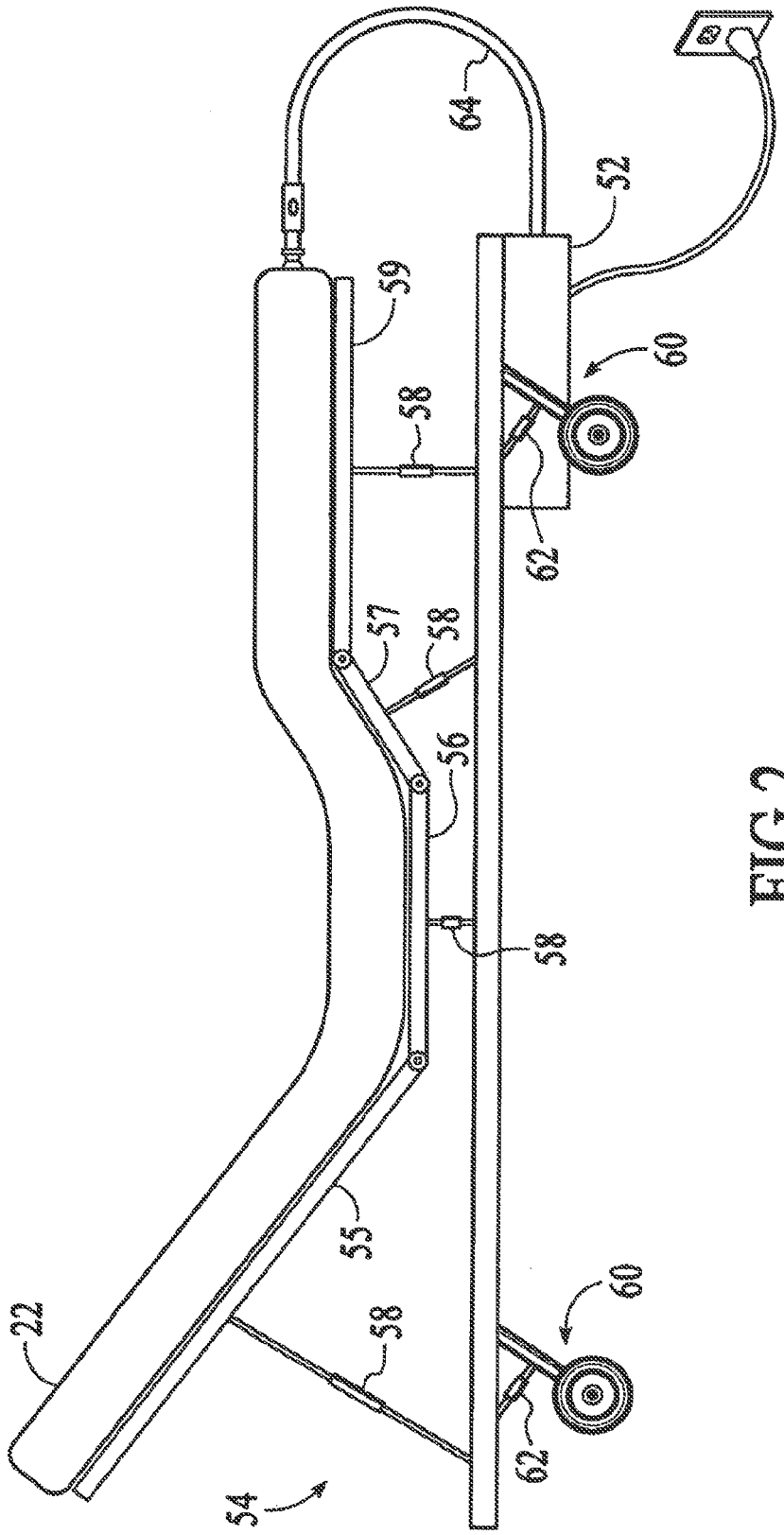

FIG.2

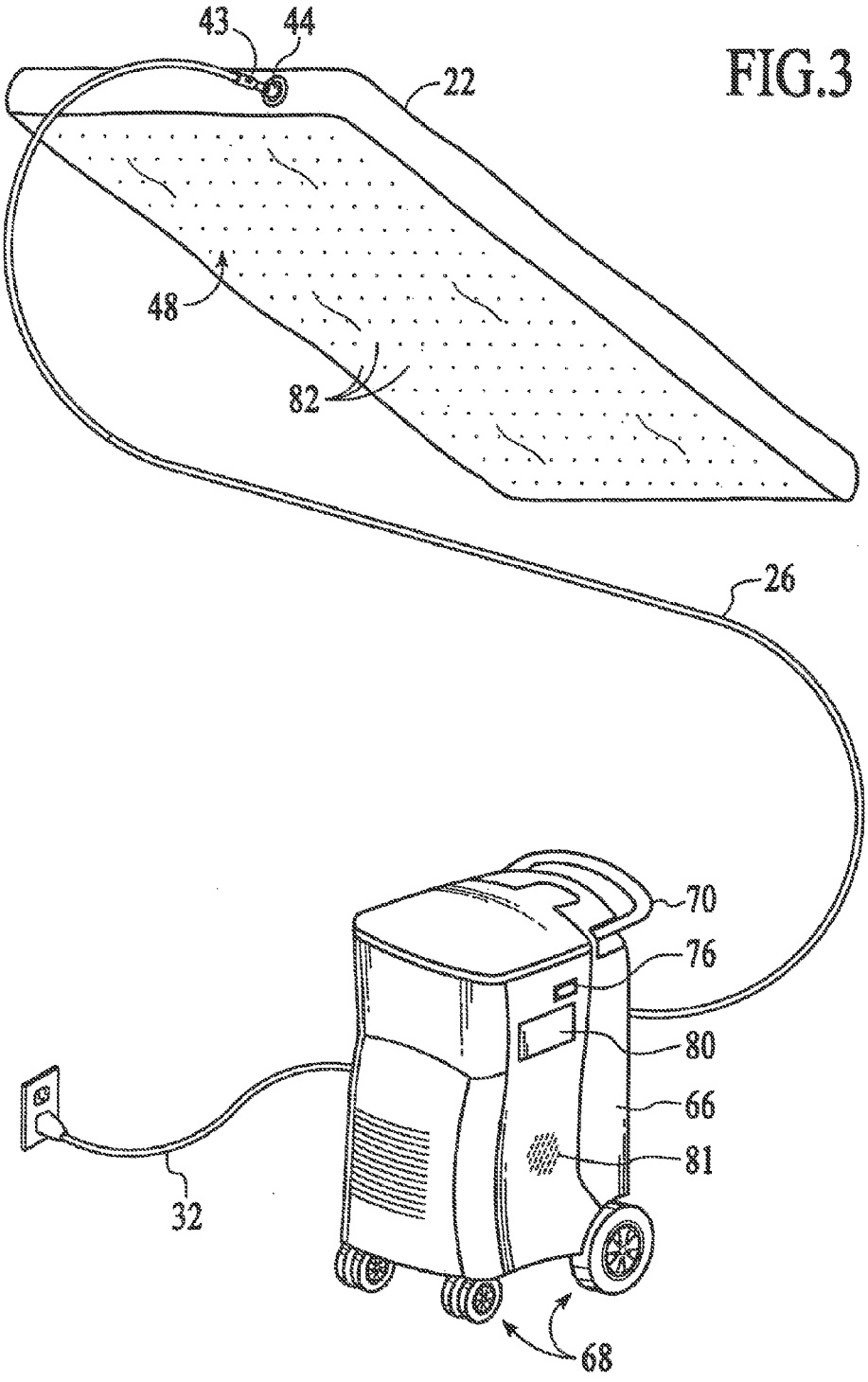

FIG.3

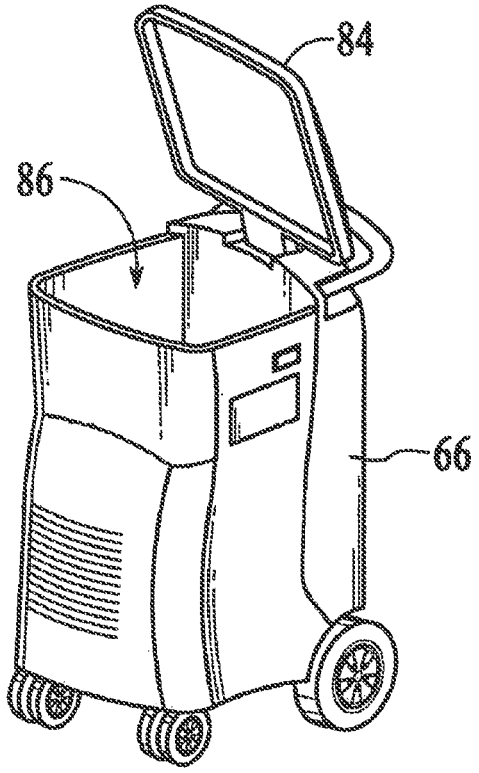

FIG.4

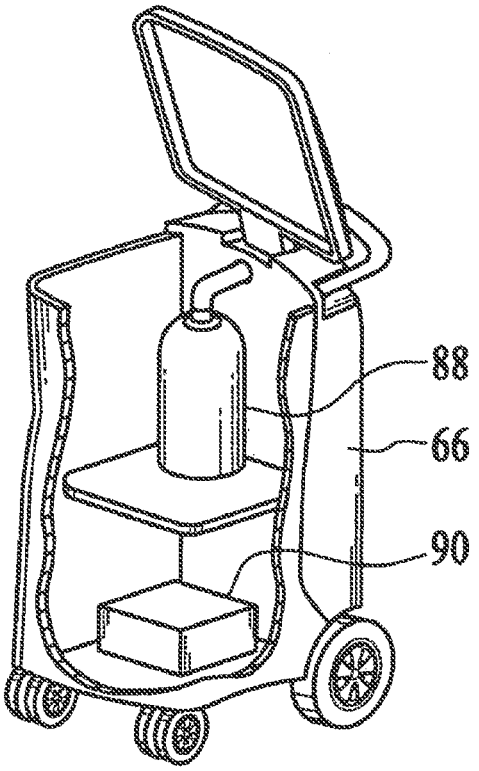

FIG.5

FIG.6

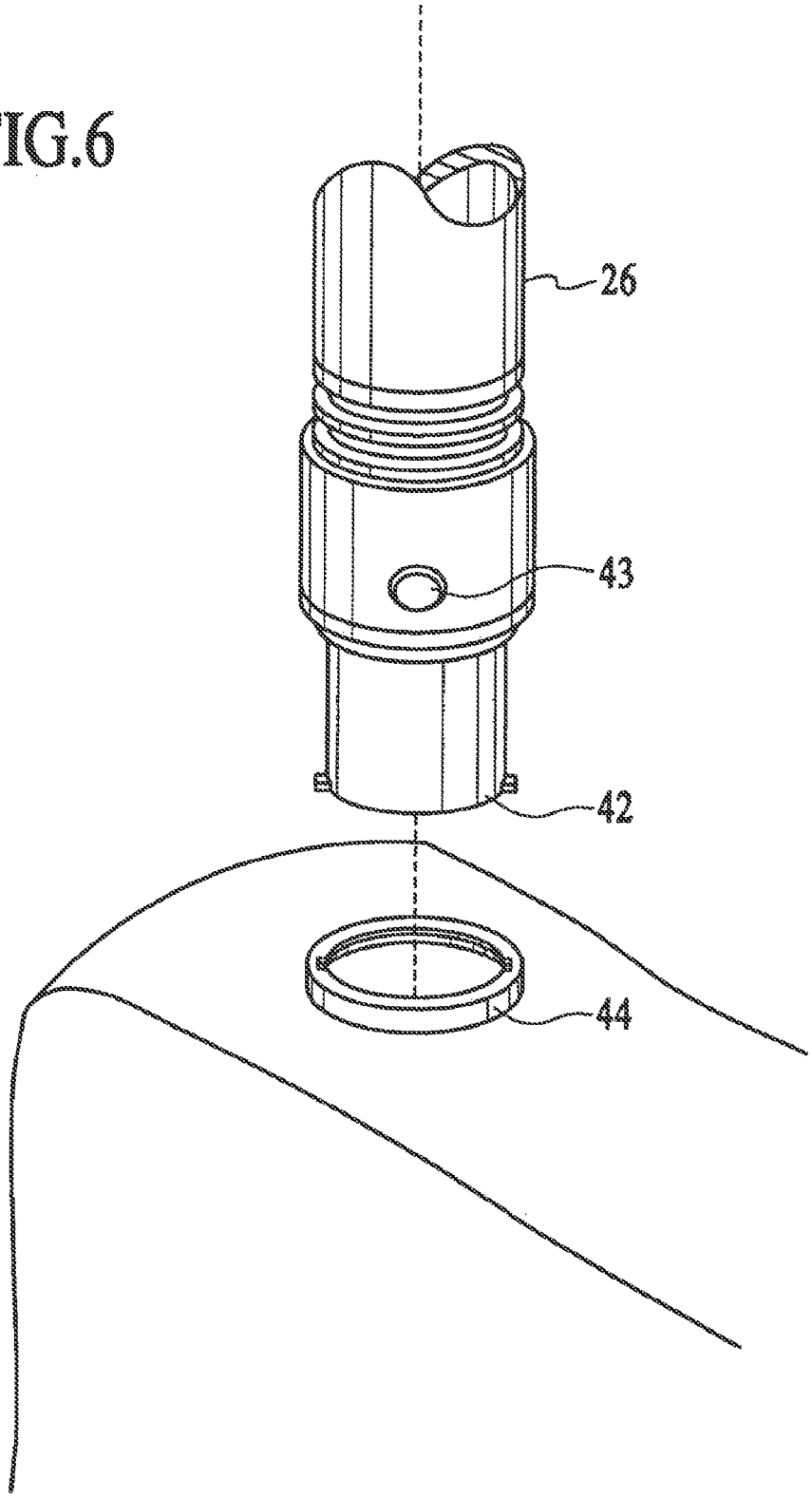

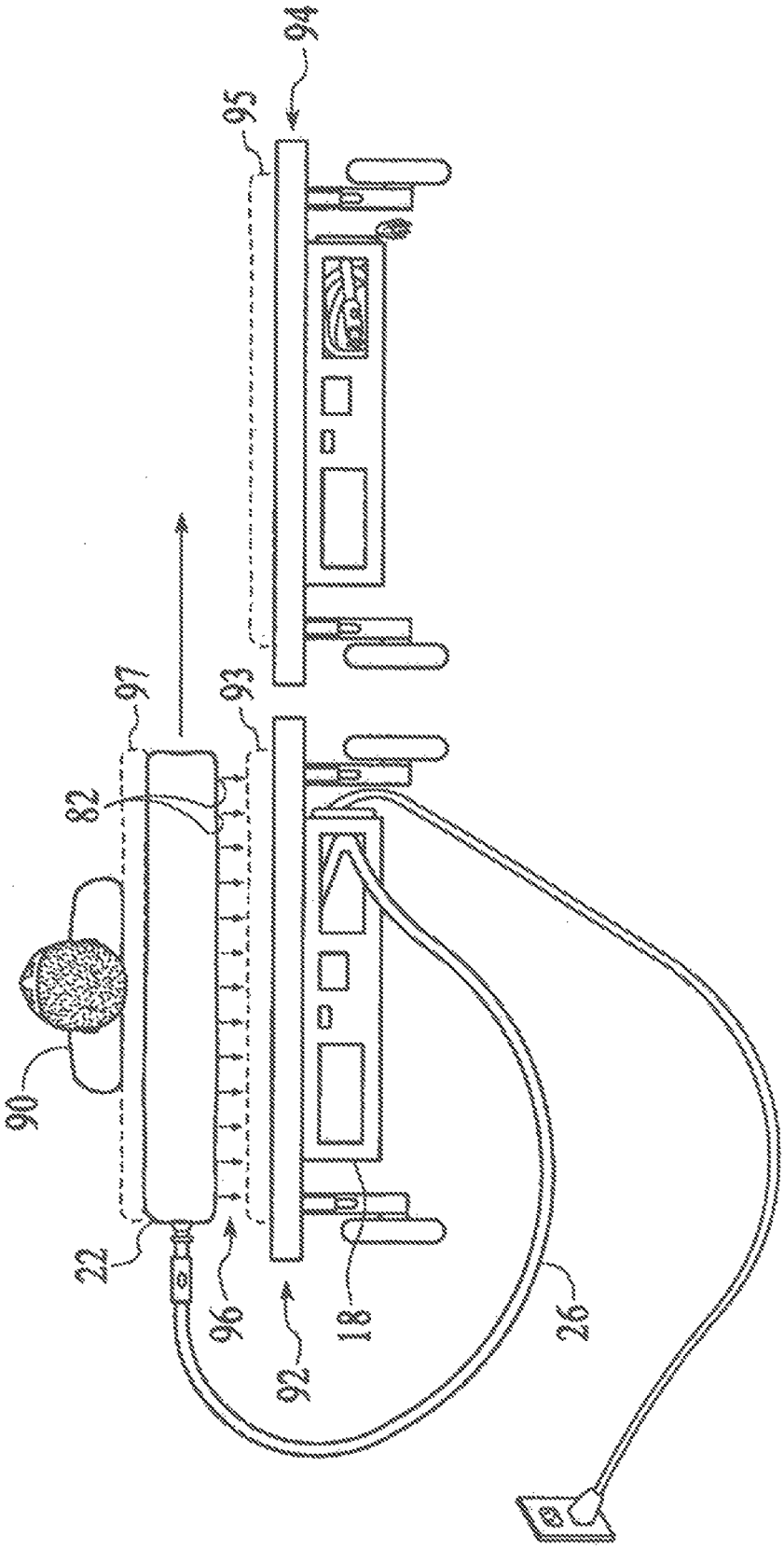

FIG.7

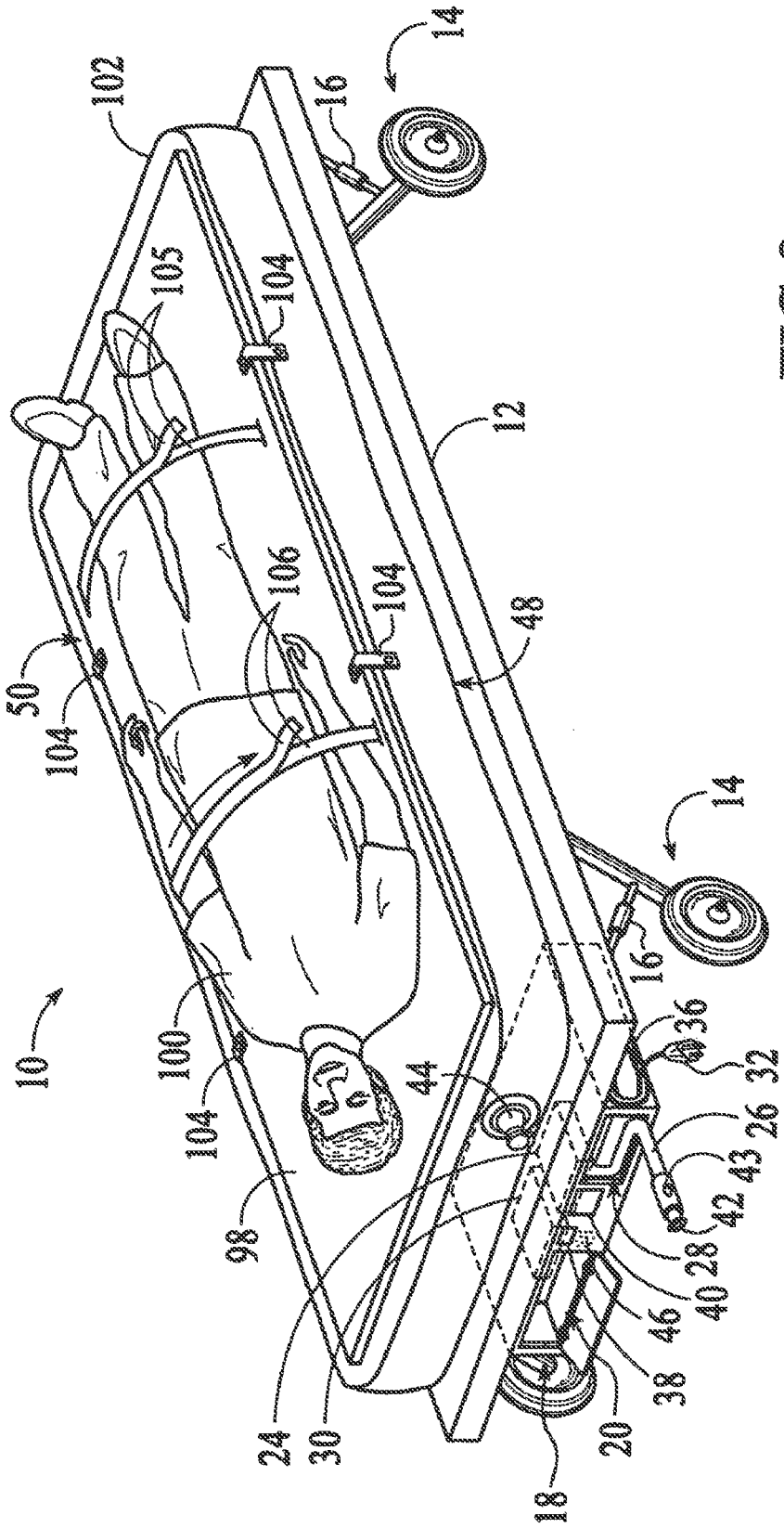
10
12
14
14
16
16
18
20
24
26
28
30
32
36
38
40
42
43
44
46
48
50
98
100
102
104
104
104
104
105
106

FIG.8

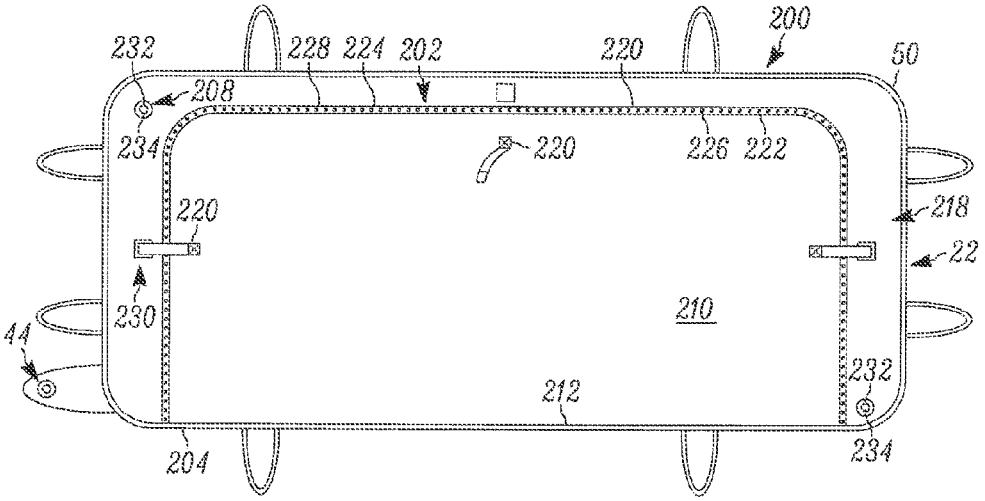
200
232
228
224
202
220
50
208
234
220
226
222
220
218
22
230
210
44
232
212
204
234

FIG. 9

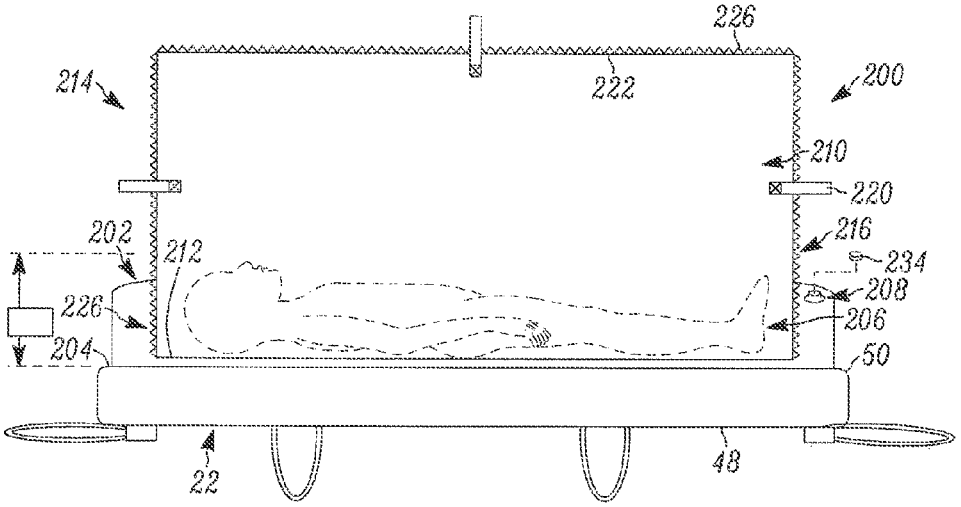
226
214
222
200
210
220
202
212
216
234
208
226
206
204
50
22
48

FIG. 10

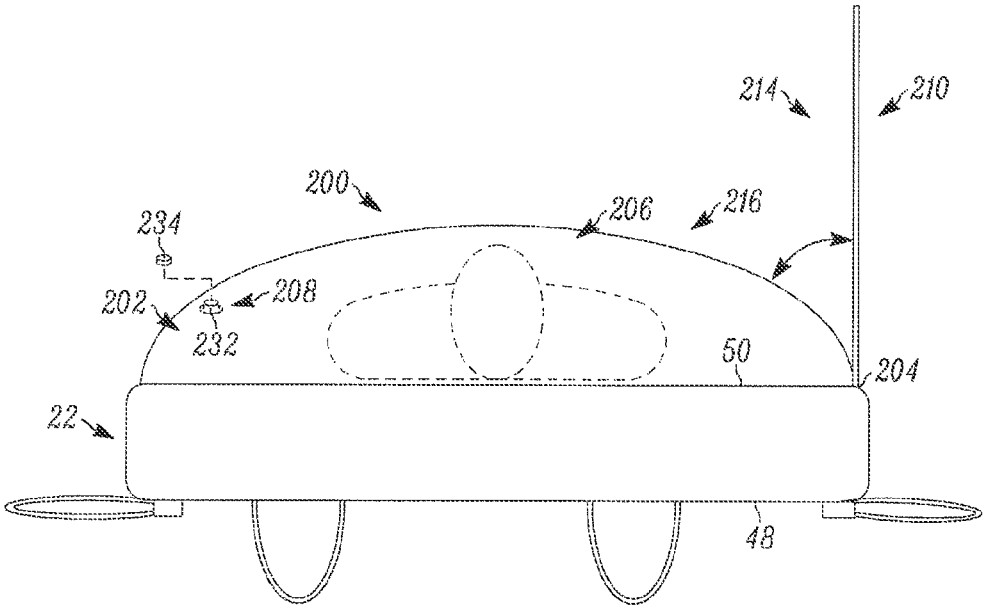
214
210
200
206
216
234
202
208
232
50
204
22
48

FIG. 11

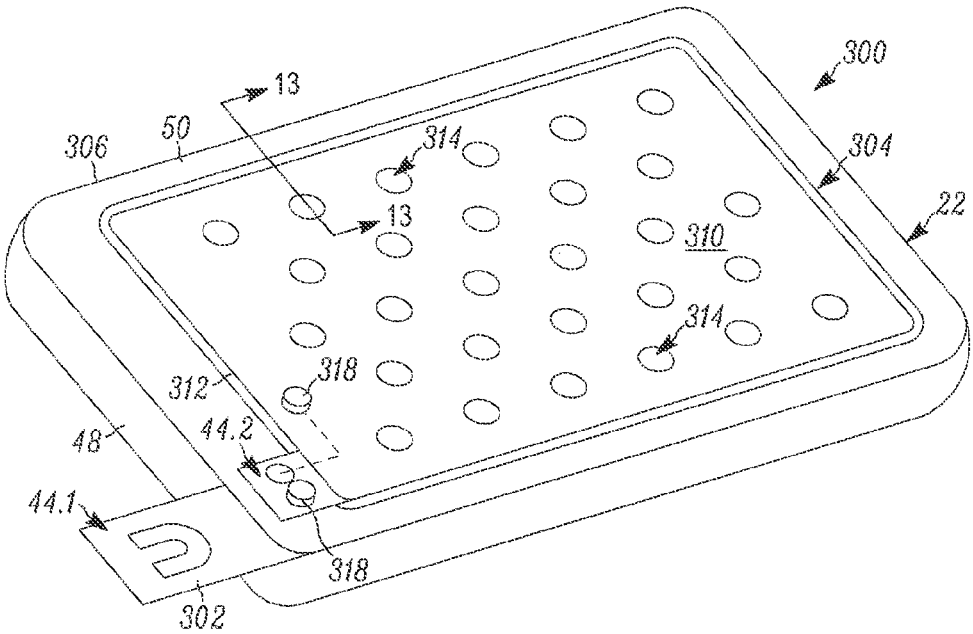
300
13
306
50
314
304
13
22
310
314
318
312
44.2
48
44.1
318
302

FIG. 12

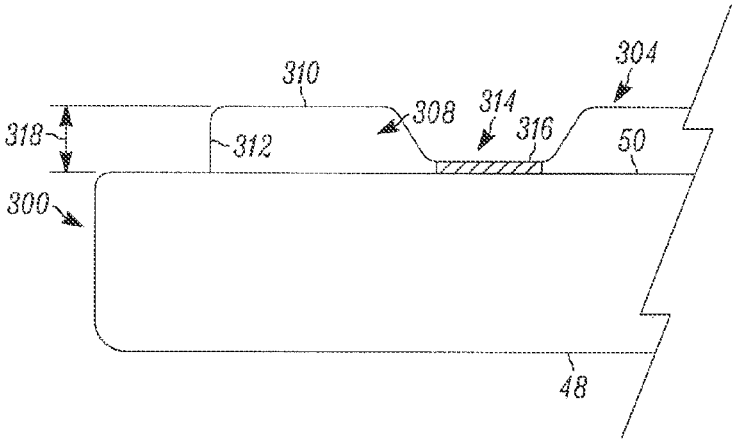
310
304
308
314
316
318
312
50
300
48

FIG. 13

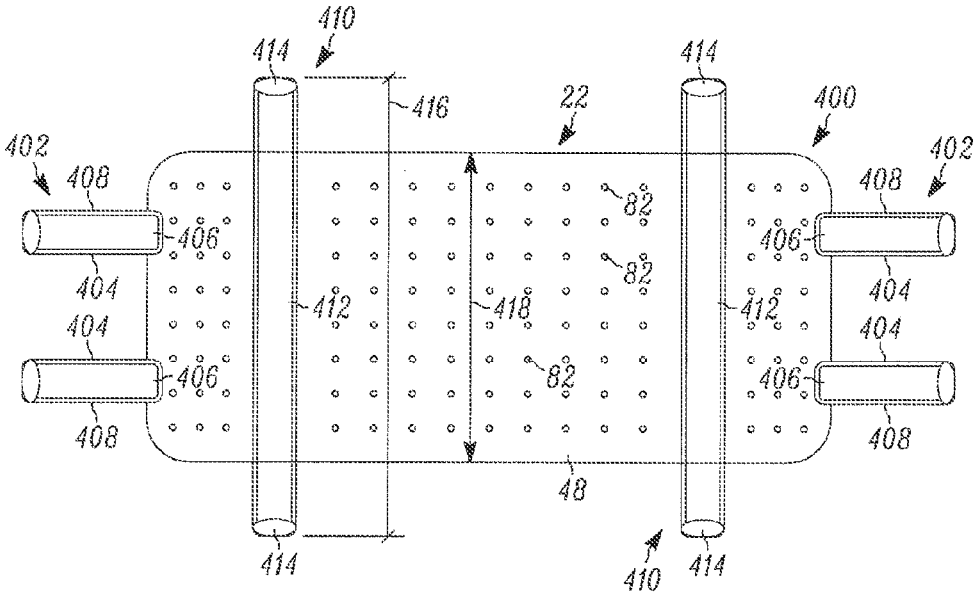
410
414
416
22
400
402
408
406
404
82
412
418
48

FIG. 14

BODY TRANSPORT APPARATUS

This application is a continuation of and claims the benefit of and priority from U.S. application Ser. No. 13/302,703, filed Nov. 22, 2011, which is a continuation-in-part of U.S. application Ser. No. 11/538,211, filed Oct. 3, 2006, now U.S. Pat. No. 8,276,222, issued Oct. 2, 2012, which is a continuation of U.S. application Ser. No. 11/036,413, filed Jan. 14, 2005, now U.S. Pat. No. 7,114,204, issued Oct. 3, 2006, all of which are hereby fully incorporated herein by reference.

The present disclosure relates generally to a body transport apparatus, and more particularly to an inflatable mattress for moving a body on a cushion of air that has an enclosed volume above the mattress.

BACKGROUND

Non-ambulatory patients or bodies that must be supported and moved in a facility such as a hospital, nursing home, morgue, funeral home, emergency scene, remote rescue location, or the like, etc. present substantial challenges when a the patient or body must be moved from one location to another. A patient, for example, may need to be moved from a hospital bed, which must remain in the patient's room, to a stretcher and then from the stretcher to a treatment location such as a surgical table in an operating room. Following treatment the reverse patient handling sequence must occur; i.e., the patient must be moved from the surgical table, which remains in the operating room, to a stretcher which travels to the patient's hospital room, and then from the stretcher back onto the bed in the hospital room. Likewise, the body of a patient that has expired may need to be moved from an operating table to a stretcher for transport to the morgue. Then from the stretcher to the examination table.

In a very large percentage of such occurrences the patient or body must be handled in a fashion which requires only a minimum of movement with respect to a supporting surface. In the case of a patient being returned to a hospital room following surgery, for example, the patient's body may not be able to withstand the stresses and strains of being lifted from a stretcher to the bed when one or even several hospital personnel combine they efforts to make such a transfer. Alternatively, the patient may require minimal contact with the supporting surface in order to provide a therapeutic effect, such as with burn patients.

The same challenge of moving a patient or body with minimum handling exists in non-surgical settings as well. The bariatric patient is a prime and very common example. When such a patient is morbidly obese, transferring presents difficulties for both the patient or body and the care facility staff. While no exact definition of morbid obesity is universally recognized, many hospitals and other treatment facilities consider a person who weighs about 350 pounds or more to fall within that definition.

Movement of a morbidly obese person often requires the hospital staff to physically lift and/or slide the patient from an at rest position on a hospital bed to an at rest position on a stretcher a total of four times to complete a single treatment cycle, such as surgery. The staff must perform the task of lifting and/or sliding such a patient because in nearly all instances the patient, due to the physical condition of obesity and/or illness, simply cannot personally do the task. The manipulation of such a person requires a plurality of hospital staff since such manipulation is impossible to perform by a single person such as a floor nurse assigned to the patient's room. As a consequence, such transfers must be planned in advance for a specific time and a number of hospital staff must

be notified and arrange their schedules so that all staff will be available at the same time. As is well known, many hospital staff are females and many of these persons are rather slight of stature. As a result, a half dozen or more such persons may need to be assembled. Instances have been known in which a morbidly obese patient has required twelve persons to effect the transfer. Gathering together such a large number of people four times at often uncertain intervals to provide but a single cycle of treatment raises obvious logistical problems and, in addition, erodes the quality of care the facility can render by reason of the application of such a large number of personnel to deal with but a single patient treatment episode.

The same challenges and drawbacks remain with respect to the storage and transport of the remains of a deceased body to be able to move the body as described above and provide dignity to the remains as the body is moved throughout the hospital, nursing home, funeral home, or the like, etc. Additionally, the collection of waste and drainage from the body is not accounted for in conventional apparatus.

Even further drawbacks have been discovered when special circumstances require heightened comfort for the patient and minimized skin compromise. For example, in those circumstances where patients with skin conditions require frequent turning or movement to avoid the formation of sores or the like, staff interaction is increased and the disadvantages mentioned herein are amplified, in addition to the need to move such a patient.

A further drawback to such a patient handling system as above described is that, even with the best intentioned and caring of staff, the patient very often suffers substantial discomfort. The simple act of sliding a patient over a flat surface can be very painful to a patient who has had surgical incisions which are far from healed, for example.

An attempt has been made to overcome the above described problems by the use of an air mattress onto which the patient is placed while in his bed and which is then placed onto a wheeler. A problem common to all such devices is that invariably the air mattress has the general characteristic of a balloon, in the sense that when one area is indented another remote area will bulge, thus creating an unstable condition. If for example a stretcher carrying an obese person makes a sharp turn during a trip to or from a treatment location, such an obese person will tend to roll toward the outside of the turn due to the instability of such a conventional mattress. The more the patient rolls, the more the mattress portion toward which the rolling movement occurs will depress, and the greater will be the expansion of the mattress on the other side of the patient. In effect, the conventional mattress reinforces the undesirable rolling movement and is unstable. Since much of the time the patient is incapable of stopping the rolling action by himself, the patient may roll off the stretcher onto the floor with disastrous consequences. Indeed, even in the instance of a patient who is capable of moving himself to some degree about his longitudinal body axis the same disastrous result may occur because the displacement of air from one edge portion of the mattress to the opposite edge portion creates in effect a tipping cradle. Only if the patient lies perfectly flat and perfectly still on the stretcher, and no roadway depressions or blocking objects, such as excess hospital beds stored in a hallway, are encountered can the probabilities of an accident be lessened.

Another problem with prior art methods of moving patients using an air cushion is the complexity of the procedure. The air mattress must first be positioned under the patient. Then an air pump must be transported to the bed area and connected to the mattress. The mattress is then inflated and the patient

moved. The same process is repeated each time the patient needs to be transferred from one bed/stretcher/table to another.

A still further problem with prior art apparatus is control of contamination. Often, a tedious cleaning protocol follows after such use to avoid cross-contamination. Cleaning is particularly difficult because contaminant particles can penetrate into the mat material, and when the mat is inflated, the pressure can force the particles out and into the air. The high cost of prior art air cushions requires their re-use.

A yet further problem with prior art apparatus is the lack of dignity afforded the remains of a deceased body. The body is usually transferred to a stretcher then draped in a sheet or must be lifted into a conventional body bag. Up arrival at the morgue and/or funeral home the body must be removed for cleaning. All the while, being transferred from one surface to another by lifting. Still yet a further problem with prior art apparatus is the amount of skin or body contact area that requires frequent movement of the patient, not only lateral transfer as explained above, but rotation or change of position to avoid compromising the skin during the healing process. Moreover, another disadvantage of the prior art is the inability to use such inflatable mattress in an uninflated state.

Therefore, there is a need in the art for a body transport apparatus that overcomes the disadvantages of the prior art and provides the advantages as described in this disclosure.

BRIEF DESCRIPTION OF THE DRAWINGS

The following disclosure as a whole may be best understood by reference to the provided detailed description when read in conjunction with the accompanying drawings, drawing description, abstract, background, field of the disclosure, and associated headings. Identical reference numerals when found on different figures identify the same elements or a functionally equivalent element. The elements listed in the abstract are not referenced but nevertheless refer by association to the elements of the detailed description and associated disclosure.

FIG. **1** illustrates an integrated patient transfer system according to the present disclosure as applied to a stretcher;

FIG. **2** illustrates an integrated patient transfer system according to the present disclosure as applied to a hospital bed;

FIG. **3** illustrates an air cushion and supply cart according to the present disclosure;

FIG. **4** illustrates an air cushion storage section of the cart of FIG. **3**;

FIG. **5** is a sectional view of the cart of FIG. **3** for illustrating an air blower and power supply;

FIG. **6** illustrates interconnecting apparatus for attaching an air supply hose to the mat;

FIG. **7** illustrates patient movement between beds;

FIG. **8** illustrates a board with the inflatable mattress;

FIG. **9** illustrates a top view of a body transport apparatus in accordance with one embodiment of the present disclosure;

FIG. **10** illustrates a side view of the body transport apparatus of FIG. **9**;

FIG. **11** illustrates an end view of the body transport apparatus of FIG. **9**;

FIG. **12** illustrates a perspective view of a body transport apparatus in accordance with another embodiment of the present disclosure;

FIG. **13** is a sectional view of the body transport apparatus of FIG. **12** taken along line **13-13**; and

FIG. **14** illustrates a bottom view of a body transport apparatus in accordance with another embodiment of the present disclosure.

DETAILED DESCRIPTION

The present disclosure is not limited to the particular details of the apparatus depicted, and other modifications and applications may be contemplated. Further changes may be made in the apparatus, device or methods without departing from the true spirit of the scope of the disclosure herein involved. It is intended, therefore, that the subject matter in this disclosure should be interpreted as illustrative, not in a limiting sense.

In one aspect of the present disclosure, a body transport apparatus may include an mattress with a plurality of holes on the bottom to provide an air cushion when the mattress is inflated and a cover portion connected to the mattress to define an enclosed volume. The cover portion may include a selectively closeable passageway. A flap may be defined in the cover portion that is movable between open and closed configurations. A plurality of hollows may be defined in the cover portion when inflated to define a minimal body contact area.

In another aspect of the present disclosure, a body transport apparatus may include an inflatable air mattress having a top portion and a bottom portion. The bottom portion may include a plurality of holes configured to provide an air cushion under the mattress when the mattress is inflated. A cover portion may be connected to the mattress to cooperatively define with the top portion an enclosed volume above the top portion. The cover portion may include a selectively closeable passageway. A flap may be defined in the cover portion that includes a fold line disposed adjacent a perimeter of the top portion and may be movable about the fold line between a first position defining an open configuration to provide access through a defined opening to the enclosed volume and a second position defining a closed configuration to prevent access to the enclosed volume.

In yet another aspect of the present disclosure, a closure assembly may connected to the flap and the defined opening to connect and disconnect the flap and the defined opening. The closure assembly may be a zipper, hook and loop fastener or the like, etc. The passageway may be defined by a drain connected to the cover portion that may include a selectively removable cover to facilitate retention of fluid within the enclosed volume. A stabilizing board may be releasably connected to the top portion of the mattress and apparatus for securing a body to the board. The mattress may include a marking for indicating that the bottom portion is to be positioned downward. The marking may include the bottom portion colored dark relative to the top portion. The top portion of the mattress may have a color of white for ease of observing fluids. The cover portion may be opaque, a black color or the like, etc.

In yet another aspect of the present disclosure, a body transport apparatus may include an inflatable air mattress including a top surface and a bottom surface that may include a plurality of exit holes configured to provide an air cushion under the mattress when the mattress is inflated. A first receptacle may be integrated into the mattress for connection to a supply of gas. A cover portion may be connected to the mattress adjacent a perimeter of the top portion to define an enclosed volume. The cover portion may include a plurality of hollows by connection of a plurality of preselected portions of the top surface to the top portion to define a minimal body contact area. A second receptacle may be integrated into the

cover portion for connection to a supply of gas. The mattress may be separately and independently inflatable from the enclosed volume.

In still yet another aspect of the present disclosure, the second receptacle may include a cover to seal the enclosed volume after inflation in order to maintain the enclosed volume in an inflated state regardless of a state of inflation of the mattress. A ratio of the body contact area to surface area may be less than 50% or less than 20%. The body contact area may be defined as that portion of the top surface that is disposed above the top portion at a distance of at least 90% of a vertical extent of the side surface.

In yet another aspect of the present disclosure, a body transport apparatus may include an inflatable air mattress including a top portion and a bottom portion that includes a plurality of air exit holes configured to provide an air cushion under the mattress when the mattress is inflated and a plurality of straps. The plurality of straps may include a plurality of end straps connected at a proximal end to the bottom portion and having a free distal end and a plurality of side straps connected at a central portion to the bottom portion and having a pair of free distal ends. The side straps may have a length greater than a width of the mattress

In still another aspect of the present disclosure, a molded handle may be disposed at the end of each strap. Each strap may have a color of safety neon orange. The side straps may extend across the width of the mattress without interference with the air exit holes.

Briefly, a preferred embodiment of the present invention includes a patient transfer apparatus including an inflatable mattress, alternatively with a rigid top board with a patient restraint system on which a patient can be placed when patient immobilization is required. A portable cart is included with a chamber for storage of a plurality of mattresses. The cart also has a gas/air blower and power supply system for empowering the blower. The power system includes provision for drawing power from line AC/DC, and has a rechargeable battery and charger for maintaining the battery by connecting the supply to the line AC/DC. The mattress has a perforated bottom surface for exit of air to provide an air cushion, and is constructed with a white top surface and a dark bottom surface for optimum recognition of contamination, and identification of the bottom surface which must be placed downward. The cart is coated with an antimicrobial substance to minimize the risk of contaminants.

An embodiment of the system **10** of the present invention is shown in FIG. **1** as applied to a stretcher **12**. The stretcher **12** can be of any type, such as used in a hospital or an ambulance, and can have fixed height legs **14** or adjustable height as indicated symbolically by adjusters **16**. According to the system of the present invention, a patient bed illustrated as a stretcher **12** in FIG. **1** is assembled with an air mattress air supply system **18** attached. The term "air" as used in the present disclosure is meant to refer to air or any other gas that can be used to inflate an inflatable mattress. "Air mattress" therefore refers to a mattress that can be inflated with any such gas. Although the bed is illustrated as a stretcher, the present invention includes any type of bed/surface for supporting a patient, and will be referred to as a bed apparatus including any form of patient support apparatus, such as a stretcher or hospital bed, etc. The supply system **18** has a compartment **20** for storage of one or more air mattresses such as air mattress **22** for placement a bed/stretcher **12**. The supply system **18** has included a gas/air blower **24**, a gas/air hose **26** and apparatus for storing the hose **28**. A power supply **30** is included, having a rechargeable battery and recharging supply. A power cord **32** and cord storage **36** is provided. The cord **32** can be plugged into an AC outlet for running the blower, and/or simply for charging the battery. With the battery charged, the blower can be operated without the need to plug the cord into an outlet. The supply **30** has an on-off switch **38**, and alternatively a display/indicator **40** for showing the degree of charge on the supply battery. The hose **26** has a connector **42** on a distal end for connection to a receptacle **44** on the air mattress **22**. As a further embodiment, an alternative power switch **43** is provided near the connector **42**. As an alternate embodiment, various portions of the system **10** may be coated in part or totally with an antimicrobial coating, indicated symbolically with dots in FIG. **1** on a portion **46**.

The air mattress **22** is constructed with small holes in the bottom surface **48** to allow gas to exit from inside the mattress **22** so as to create an air cushion for levitating the air mattress. As an alternate embodiment, the bottom surface with the holes is marked to indicate that it is to be placed downward. The top surface **50** is preferably a very light color, more preferably white to more easily observe contamination. The purpose of the very light top surface is to allow operating personnel to more easily identify contamination on the top surface. A substantial portion of the air mattress **22** (approximately 90%) is preferably constructed of nylon, and as a result is less expensive to fabricate than prior art air mattresses. The low cost, disposable air mattress of the present invention is a major improvement in sanitation for an inflatable air mattress, since contaminant particles can become embedded in the air mattress material Which makes cleaning difficult. This is a particular problem because when an air mattress is inflated, the gas pressure forces contaminants from the material, making them air borne.

The inflatable air mattress **22** can be positioned on a firm surface or alternatively the air mattress **22** can be placed either on top of or under a non-inflatable mattress. These alternative positions are illustrated more dearly in a planar view, as shown and discussed in reference to FIG. **7**.

FIG. **2** illustrates the integration of a supply system **52** on an adjustable hospital bed **54**. The supply system **52** has the features of the supply system **18** that is integrated on the stretcher of FIG. **1**. The bed **54** and stretcher **12** are only symbolically illustrated. Those skilled in the art will know how to construct a stretcher and adjustable hospital bed. The present invention includes the combination of any stretcher or bed with a supply system attached/integrated such as supply **18** or **52**. Planar items **55**, **56**, **57**, **59** and adjusters **58** are symbolically shown to indicate an adjustable patient surface, and optional adjustable legs are indicated symbolically by legs **60** and adjusters **62**. A hose **64** is shown connected to the air mattress **22**. The air mattress **22** shown in FIG. **2** is shown placed on firm planar elements/items **55 59**. The mattress **22** of FIG. **2** can also be placed on top of or under a non-inflatable mattress in a similar way as that described in reference to FIG. **1**, and shown and described in reference to FIG. **7**.

An alternate embodiment of the present invention is illustrated in FIG. **3** for use in applying the system to existing beds. In this embodiment, a portable supply cart **66** is provided for supplying air to an air mattress **22**. The cart **66** has wheels **68** and a handle **70** for convenient portability. The cart **66** also has features similar to those described in reference to the supply **18** of FIG. **1**, including a storage compartment for storage of one or more air mattresses **22**, a rechargeable power supply, a hose **26** and power cord **32**, one or more on-off switches located either at **76** or **43** or at both positions, and alternatively a display **80** for showing the degree of charge on a rechargeable battery cart inside and outside included in the cart **66**. As an alternate embodiment, the cart **66** can have an antimicrobial coating **81** on part or all of the

cart inside and outside surfaces. An antimicrobial surface in the mat storage chamber **86** (FIG. **4**) helps maintain the sanitary condition of a mat or mats stored therein prior to their use on a bed. The view of the air mattress **22** of FIG. **3** allows illustration of the bottom surface **48** and the holes for exit of gas/air, noted as items **82**.

FIG. **4** shows a view of the cart **66** with a lid **84** open to show enclosure/compartment **86** for storing one or more air mattresses **22**.

FIG. **5** is a sectional view of the cart **66** for showing a gas/air blower **88** and a power supply **90** as part of the cart **66**. The blower **88** and supply **90** have the same functions as the blower **24** and supply **30** of FIG. **1**.

FIG. **6** provides a more detailed view of the receptacle **44** and connector **42** introduced in reference to FIG. **1**. This connector and receptacle combination is an improvement over prior art apparatus used to connect to inflatable mattresses for providing an air cushion for moving patients. The prior art connections are made with hook and loop material that can harbor contamination. The nonporous surface of the material of the apparatus of FIG. **6** is more sanitary since it can be easily cleaned.

FIG. **7** illustrates a system of the present invention in operation. A patient **90** is on a first bed apparatus **92**, and is to be moved onto an adjacent second bed apparatus **94**. The patient **90** has been placed on an inflatable mattress **22** for providing an air cushion **96**, and the supply system **18** has the hose **26** connected to the air mattress **22** and is supplying a gas, a portion of which is forced out exit holes **82**, causing the air mattress **22** to float on a cushion of air/gas **96**. An attendant can at this stage, move the air mattress **22** with patient over onto the bed **94**. The planar view of FIG. **7** is also used in the present disclosure to illustrate placing the air mattress either above or below a non-inflatable mattress. Dashed outline **93** illustrates a non-inflatable mattress on which air mattress **22** is placed. A similar non-inflatable mattress **95** can also be placed on bed **94**. Alternatively, the air mattress **22** can be placed under a non-inflatable mattress **97** upon which the patient **90** is placed. Any combination of inflatable air mattresses as described herein with non-inflatable mattresses on any of the various beds described in the present disclosure are included in the present invention.

FIG. **8** shows a bed with the inflatable mattress and supply system similar to that displayed in FIG. **1**, except for the addition of a board **98** for stabilization of a patient **100**. The board **98** is shown attached to the inflatable air mattress **102** with fasteners **104**. Other methods for attaching/retaining the board **98** to the mattress **102** will be apparent to those skilled in the art, and these are also included in the spirit of the present invention. One example of another method of retaining the board would be to insert it in a pocket attached to or integral with the mattress **102**. For further stabilization of the patient **100**, straps **105** and **106** may be included, attached to the board **98** as shown, or to the mattress **102**. A board as described with the attachment can be used whenever the inflatable mattress is used, in all of the applications as described in the present disclosure. The mattress **102** may be placed directly on the firm surface of the stretcher **12**, or on a similar surface of a hospital bed, or it can be placed over a non-inflatable mattress as described in reference to FIG. **7**.

FIGS. **9-11** illustrate a body transport apparatus **200** in accordance with one embodiment of the present disclosure. The body transport apparatus **200**, in this embodiment, may include an inflatable air mattress **22** including a top portion **50** and a bottom portion **48**. The bottom portion **48** may include a plurality of air exit holes **82** configured to provide an air cushion under the mattress **22** when the mattress **22** is inflated. A cover portion **202** connected to the mattress **22** adjacent a perimeter **204** of the top portion **50** to cooperatively define with the top portion an enclosed volume **206** above the top portion **50**. The cover portion **202** may include a selectively closeable passageway **208**. A flap **210** may be defined in the cover portion **202** and may include a fold line **212** disposed adjacent the perimeter **204** of the top portion **50**. The flap **210** may be movable about the fold line **212** between a first position defining an open configuration **214** to provide access through a defined opening **216** to the enclosed volume **206** (see FIGS. **10** and **11**) and a second position defining a closed configuration **218** to prevent access to the enclosed volume **206** (see FIG. **9**). A receptacle **44** may be disposed on a flange extending from the mattress **22** to facilitate connection to an air supply and remain away from contact with the body or patient when the mattress is inflated, which is a benefit over the prior art. A closure assembly **220** may be connected to a perimeter of the flap **222** and the perimeter of the defined opening **224** that is selectively engagable in a first orientation wherein a first portion **226** of the closure assembly **220** connected to the flap **210** is disconnected from a second portion **228** of the closure assembly **220** connected to the defined opening **216** (see FIGS. **10** and **11**) and a second orientation wherein the first portion **226** is connected to the second portion **228**. The structure of the closure assembly **220** may be selected from the group consisting of a zipper, a hook and loop fastener **230**, or the like, etc. to perform the intended functionality. The passageway **208** may be defined by a drain **232** connected to the cover portion **202** that may also include a selectively removable cover **234** to facilitate retention of fluid within the enclosed volume **206**. The passageway may be welded to the cover portion and be constructed with a ¾" internal diameter. A stabilizing board **98** may be releasably connected to the top portion **50** of the mattress **22** and apparatus **105**, **106** for securing a body **100** to the board **98**, as shown in FIG. **8** and described herein. In one embodiment, the cover portion **202** may be opaque, have a black color or the like, etc. In one embodiment, the cover portion may be constructed of a black 4 ounce vinyl, the top portion may be constructed of a white 10 ounce PVC coated nylon and the bottom portion may be constructed of a royal blue 10 ounce PVC coated nylon. The body transport apparatus of this embodiment may be used to collect waste and drainage from the body. The drain passageway's facilitate collected of such fluids generated during the wash down of the body and as a result of decomposition. After the body has been washed when disposed atop the body transport apparatus of this embodiment and all fluids collected in the enclosed volume, the covers may be applied to the drains. The mattress is log rolled under the body such that the body may be fully disposed and contained within the enclosed volume. When the body needs to be transported, the air supply is connected to the receptacle to inflate the mattress.

FIGS. **12** and **13** illustrate a body transport apparatus **300** in accordance with another embodiment of the present disclosure. The body transport apparatus **200** of this embodiment may include an inflatable air mattress **22** including a top surface **50** and a bottom surface **48** that may include a plurality of air exit holes **82** configured to provide an air cushion under the mattress **22** when the mattress **22** is inflated. A first receptacle **44.1** may be integrated into the mattress **22** or a flange **302** that extends from the mattress **22** for connection to a supply of gas as described herein. A cover portion **304** may be connected to the mattress **22** adjacent a perimeter **306** of the top portion **50** to cooperatively define with the top portion **50** an enclosed volume **308** above the top portion **50**. The cover portion **304** may include a top surface **310** and a side

surface **312**. A plurality of hollows **314** may be defined in the cover portion **304** when inflated by connection of a plurality of preselected portions of the top surface **316** to the top portion **50** to define a body contact area of the top surface that is less than a surface area of the top surface **310**. A second receptacle **44.2** may be integrated into the cover portion **304** for connection to a supply of gas as described herein. Preferably, the mattress **22** is separately and independently inflatable from the enclosed volume **308**. The second receptacle **44.2** may include a cover **318** to seal the enclosed volume **308** after inflation to maintain the enclosed volume **308** in an inflated state regardless of a state of inflation of the mattress **22**. The cover **318** may include a cap connected to the second receptacle **44.2**, a self-closing flap disposed within the opening of the second receptacle **44.2** that is normally closed except when connected to the connector at the distal end of the hose, or the like, etc. In one embodiment, a ratio of the body contact area to surface area is less than 50%. In another embodiment, the ratio of the body contact are surface area is less than 20%. The body contact area may be defined as that portion of the top surface **310** that is disposed above the top portion **50** at a distance of at least 90% of a vertical extent **318** of the side surface **312**. The body transport apparatus of this embodiment may be log rolled under the patient. The air supply is then used to inflate the cover portion and once the desired comfort level for the patient is achieved, the air supply may be disconnected and the cover applied to the second receptacle. When the patient needs to be transported, the air supply is connected to the first receptacle to inflate the mattress and the patient may be moved as described herein.

FIG. **14** illustrates a bottom view of a body transport apparatus **400** in accordance with another embodiment of the present disclosure. The body transport apparatus **400** in this embodiment may include an inflatable air mattress **22** including a top portion **50** and a bottom portion **48** that may include a plurality of air exit holes **82** configured to provide an air cushion under the mattress **22** when the mattress **22** is inflated and a plurality of straps **402** that may include a plurality of end straps **404** connected at a proximal end **406** to the bottom portion **48** and having a free distal end **408** and a plurality of side straps **410** connected at a central portion **412** to the bottom portion and having a pair of free distal ends **414**. In one embodiment, the side straps **410** have a length **416** greater than a width **418** of the mattress **22**. A molded handle **418** may be disposed at the distal end **408**, **414** of each strap **404**, **410**. The molded handle **418** may be configured as having an aperture, as shown in the end straps **404** or a solid raised element, as shown in the side straps **410**. Each strap **404**, **410** may have a color of safety neon orange, yellow, green, pink or the like, etc. The side straps **410** may extend across the width **418** of the mattress **22** without interference with the air exit holes **82**. The straps **404**, **410** may be configured from a 2 inch wide nylon webbing in one embodiment. Preferably, in this embodiment, straps **404**, **410** are constructed and connected to the mattress **22** in such a manner as to provide additional functionality in a non-inflated state. Namely, an injured person disposed in a difficult to access location or on a non-flat location may be rolled onto the uninflated mattress **22** and the straps **404**, **410**, especially the side straps **410**, may be used to move the person to a safer or different location. From that point, the straps **404**, **410** may be used to lift the person to a stretch or other similar transport apparatus as described herein. Without the straps **404**, **410**, the mattress **22** would fail to function in the manner described with respect to this embodiment since the straps **404**, **410** provide the needed additional strength and reinforcement.

Furthermore, while the particular preferred embodiments have been shown and described, it is obvious to those skilled in the art that changes and modifications may be made without departing from the teaching of the disclosure. The matter set forth in the foregoing description and accompanying drawings is offered by way of illustration only and not as limitation. The actual scope of the disclosure is intended to be defined in the following claims when viewed in their proper perspective based on the related art.

What is claimed is:

1. A body transport apparatus comprising: an inflatable air mattress including a top portion and a bottom portion, the bottom portion including a plurality of air exit holes configured to provide an air cushion under the mattress when the mattress is inflated; a cover portion connected to the mattress adjacent to an entire perimeter of the top portion to cooperatively define with the top portion an enclosed volume above the top portion and below the cover portion, the cover portion including a selectively closeable passageway that extends between the enclosed volume and an exterior of the cover portion; a flap defined in the cover portion and including a fold line disposed adjacent the perimeter of the top portion, wherein the flap is movable about the fold line between a first position defining an open configuration to provide access through a defined opening to the enclosed volume and a second position defining a closed configuration to prevent access to the enclosed volume, wherein a closure assembly is connected to a perimeter of the flap and the defined opening that is selectively engagable in a first orientation wherein a first portion of the closure assembly connected to the flap is disconnected from a second portion of the closure assembly connected to the defined opening and a second orientation wherein the first portion is connected to the second portion.

2. The body transport apparatus of claim **1**, further comprising a stabilizing board releasably connected to the top portion of the mattress and apparatus for securing a body to the board.

3. The body transport apparatus of claim **1**, wherein said mattress includes a marking for indicating that the bottom portion is to be positioned downward.

4. The body transport apparatus of claim **3**, wherein said marking includes the bottom portion colored dark relative to the top portion.

5. The body transport apparatus of claim **1**, wherein the top portion of the mattress has a color of white for ease of observing fluids.

6. The body transport apparatus of claim **1**, wherein the cover portion is opaque.

7. The body transport apparatus of claim **1**, wherein the cover portion has a black color.

* * * * *