US009295587B2

(12) **United States Patent**
Seegert

(10) **Patent No.: US 9,295,587 B2**
(45) **Date of Patent: Mar. 29, 2016**

(54) **REDUCED-PRESSURE, LINEAR WOUND CLOSING BOLSTERS AND SYSTEMS**

(71) Applicant: **KCI Licensing, Inc.**, San Antonio, TX (US)

(72) Inventor: **Charles Alan Seegert**, Irving, TX (US)

(73) Assignee: **KCI Licensing, Inc.**, San Antonio, TX (US)

(*) Notice: Subject to any disclaimer, the term of this patent is extended or adjusted under 35 U.S.C. 154(b) by 262 days.

(21) Appl. No.: **13/954,703**

(22) Filed: **Jul. 30, 2013**

(65) **Prior Publication Data**

US 2013/0317465 A1 Nov. 28, 2013

Related U.S. Application Data

(62) Division of application No. 13/456,201, filed on Apr. 25, 2012, now Pat. No. 8,523,832, which is a division of application No. 12/475,388, filed on May 29, 2009, now Pat. No. 8,187,237.

(60) Provisional application No. 61/078,114, filed on Jul. 3, 2008, provisional application No. 61/057,803, filed on May 30, 2008.

(51) **Int. Cl.**
A61M 1/00 (2006.01)
A61F 13/15 (2006.01)
(Continued)

(52) **U.S. Cl.**
CPC ***A61F 13/0216*** (2013.01); ***A61F 13/00068*** (2013.01); ***A61M 1/0088*** (2013.01);
(Continued)

(58) **Field of Classification Search**
CPC A61F 13/15; A61L 15/60; A61M 1/00; A61M 27/00
See application file for complete search history.

(56) **References Cited**

U.S. PATENT DOCUMENTS

1,355,846 A 10/1920 Rannells
2,547,758 A 4/1951 Keeling
(Continued)

FOREIGN PATENT DOCUMENTS

AU 550575 A1 3/1986
AU 745271 4/1999
(Continued)

OTHER PUBLICATIONS

N.A. Bagautdinov, "Variant of External Vacuum Aspiration in the Treatment of Purulent Diseases of the Soft Tissues," Current Problems in Modern Clinical Surgery: Interdepartmental Collection, edited by V. Ye Volkov et al. (Chuvashia State University, Cheboksary, U.S.S.R. 1986);pp. 94-96 (copy and certified translation).

(Continued)

Primary Examiner — Melanie Hand

(57) **ABSTRACT**

A reduced-pressure, linear-wound closing bolster has a pivotable frame that moves from an extended position to a compressed position under the influence of reduced pressure. The closing bolster may have a first closing member, a second closing member, and an interior space. A manifold member is disposed within the interior space and may be coupled to the pivotable frame. When a reduced pressure is applied, the pivotable frame is urged from the extended position to the compressed position. A first gripping member for transmitting a closing force from the first closing member to a first edge of a linear wound may be attached. Likewise, a second gripping member for transmitting a closing force from the second closing member to a second edge of the linear wound may be attached. Systems and methods are also presented.

14 Claims, 6 Drawing Sheets

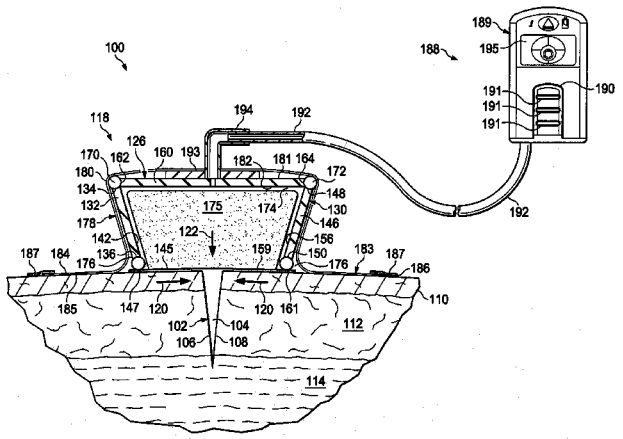

(51) **Int. Cl.**

A61F 13/02	(2006.01)
A61F 13/00	(2006.01)
A61B 17/00	(2006.01)
A61B 17/08	(2006.01)

(52) **U.S. Cl.**

CPC . *A61B2017/00561* (2013.01); *A61B 2017/081* (2013.01); *A61M 1/0037* (2013.01); *Y10T 29/49826* (2015.01)

(56) **References Cited**

U.S. PATENT DOCUMENTS

2,632,443	A	3/1953	Lesher
2,682,873	A	7/1954	Evans et al.
2,910,763	A	11/1959	Lauterbach
2,969,057	A	1/1961	Simmons
3,066,672	A	12/1962	Crosby, Jr. et al.
3,367,332	A	2/1968	Groves
3,520,300	A	7/1970	Flower, Jr.
3,568,675	A	3/1971	Harvey
3,648,692	A	3/1972	Wheeler
3,682,180	A	8/1972	McFarlane
3,826,254	A	7/1974	Mellor
4,080,970	A	3/1978	Miller
4,096,853	A	6/1978	Weigand
4,139,004	A	2/1979	Gonzalez, Jr.
4,165,748	A	8/1979	Johnson
4,184,510	A	1/1980	Murry et al.
4,233,969	A	11/1980	Lock et al.
4,245,630	A	1/1981	Lloyd et al.
4,256,109	A	3/1981	Nichols
4,261,363	A	4/1981	Russo
4,275,721	A	6/1981	Olson
4,284,079	A	8/1981	Adair
4,297,995	A	11/1981	Golub
4,333,468	A	6/1982	Geist
4,373,519	A	2/1983	Errede et al.
4,382,441	A	5/1983	Svedman
4,392,853	A	7/1983	Muto
4,392,858	A	7/1983	George et al.
4,419,097	A	12/1983	Rowland
4,465,485	A	8/1984	Kashmer et al.
4,475,909	A	10/1984	Eisenberg
4,480,638	A	11/1984	Schmid
4,525,166	A	6/1985	Leclerc
4,525,374	A	6/1985	Vaillancourt
4,540,412	A	9/1985	Van Overloop
4,543,100	A	9/1985	Brodsky
4,548,202	A	10/1985	Duncan
4,551,139	A	11/1985	Plaas et al.
4,569,348	A	2/1986	Hasslinger
4,605,399	A	8/1986	Weston et al.
4,608,041	A	8/1986	Nielson
4,640,688	A	2/1987	Hauser
4,655,754	A	4/1987	Richmond et al.
4,664,662	A	5/1987	Webster
4,710,165	A	12/1987	McNeil et al.
4,733,659	A	3/1988	Edenbaum et al.
4,743,232	A	5/1988	Kruger
4,758,220	A	7/1988	Sundblom et al.
4,787,888	A	11/1988	Fox
4,826,494	A	5/1989	Richmond et al.
4,838,883	A	6/1989	Matsuura
4,840,187	A	6/1989	Brazier
4,863,449	A	9/1989	Therriault et al.
4,872,450	A	10/1989	Austad
4,878,901	A	11/1989	Sachse
4,897,081	A	1/1990	Poirier et al.
4,906,233	A	3/1990	Moriuchi et al.
4,906,240	A	3/1990	Reed et al.
4,919,654	A	4/1990	Kalt et al.
4,941,882	A	7/1990	Ward et al.
4,953,565	A	9/1990	Tachibana et al.
4,969,880	A	11/1990	Zamierowski
4,985,019	A	1/1991	Michelson
5,037,397	A	8/1991	Kalt et al.
5,086,170	A	2/1992	Luheshi et al.
5,092,858	A	3/1992	Benson et al.
5,100,396	A	3/1992	Zamierowski
5,134,994	A	8/1992	Say
5,149,331	A	9/1992	Ferdman et al.
5,167,613	A	12/1992	Karami et al.
5,176,663	A	1/1993	Svedman et al.
5,215,522	A	6/1993	Page et al.
5,232,453	A	8/1993	Plass et al.
5,261,893	A	11/1993	Zamierowski
5,278,100	A	1/1994	Doan et al.
5,279,550	A	1/1994	Habib et al.
5,298,015	A	3/1994	Komatsuzaki et al.
5,342,376	A	8/1994	Ruff
5,344,415	A	9/1994	DeBusk et al.
5,358,494	A	10/1994	Svedman
5,437,622	A	8/1995	Carion
5,437,651	A	8/1995	Todd et al.
5,527,293	A	6/1996	Zamierowski
5,549,584	A	8/1996	Gross
5,556,375	A	9/1996	Ewall
5,607,388	A	3/1997	Ewall
5,636,643	A	6/1997	Argenta et al.
5,645,081	A	7/1997	Argenta et al.
6,071,267	A	6/2000	Zamierowski
6,135,116	A	10/2000	Vogel et al.
6,241,747	B1	6/2001	Ruff
6,287,316	B1	9/2001	Agarwal et al.
6,345,623	B1	2/2002	Heaton et al.
6,488,643	B1	12/2002	Tumey et al.
6,493,568	B1	12/2002	Bell et al.
6,553,998	B2	4/2003	Heaton et al.
6,814,079	B2	11/2004	Heaton et al.
2002/0077661	A1	6/2002	Saadat
2002/0115951	A1	8/2002	Norstrem et al.
2002/0120185	A1	8/2002	Johnson
2002/0143286	A1	10/2002	Tumey
2006/0079852	A1	4/2006	Bubb et al.

FOREIGN PATENT DOCUMENTS

AU	755496		2/2002
CA	2005436		6/1990
DE	26 40 413	A1	3/1978
DE	43 06 478	A1	9/1994
DE	295 04 378	U1	10/1995
EP	0100148	A1	2/1984
EP	0117632	A2	9/1984
EP	0161865	A2	11/1985
EP	0358302	A2	3/1990
EP	1018967	B1	8/2004
GB	692578		6/1953
GB	2 195 255	A	4/1988
GB	2 197 789	A	6/1988
GB	2 220 357	A	1/1990
GB	2 235 877	A	3/1991
GB	2 329 127	B	3/1999
GB	2 333 965	A	8/1999
JP	4129536		4/1992
SG	71559		4/2002
WO	80/02182		10/1980
WO	87/04626		8/1987
WO	90/10424		9/1990
WO	93/09727		5/1993
WO	94/20041		9/1994
WO	96/05873		2/1996
WO	97/18007		5/1997
WO	99/13793		3/1999
WO	2007041642	A2	4/2007

OTHER PUBLICATIONS

Louis C. Argenta, MD and Michael J. Morykwas, PhD; "Vacuum-Assisted Closure: A New Method for Wound Control and Treatment: Animal Studies & Basic Foundation"; Annals of Plastic Surgery, vol. 38, No. 6, Jun. 1997; pp. 553-562.

(56) **References Cited**

OTHER PUBLICATIONS

Susan Mendez-Eastmen, RN; "When Wounds Won't Heal" RN Jan. 1998, vol. 61 (1); Medical Economics Company, Inc., Montvale, NJ, USA; pp. 20-24.
James H. Blackburn, II, MD, et al; "Negative-Pressure Dressings as a Bolster for Skin Grafts"; Annals of Plastic Surgery, vol. 40, No. 5, May 1998, pp. 453-457.
John Masters; "Reliable, Inexpensive and Simple Suction Dressings"; Letters to the Editor, British Journal of Plastic Surgery, 1998, vol. 51 (3), p. 267; Elsevier Science/The British Association of Plastic Surgeons, UK.
S.E. Greer, et al "The Use of Subatmospheric Pressure Dressing Therapy to Close Lymphocutaneous Fistulas of the Groin" British Journal of Plastic Surgery (2000), vol. 53, pp. 484-487.
George V. Letsou, MD., et al; "Stimulation of Adenylate Cyclase Activity in Cultured Endothelial Cells Subjected to Cyclic Stretch"; Journal of Cardiovascular Surgery, vol. 31, 1990, pp. 634-639.
Orringer, Jay, et al; "Management of Wounds in Patients with Complex Enterocutaneous Fistulas"; Surgery, Gynecology & Obstetrics, Jul. 1987, vol. 165, pp. 79-80.
International Search Report for PCT International Application PCT/GB95/01983; Nov. 23, 1995.
PCT International Search Report for PCT International Application PCT/GB98/02713; Jan. 8, 1999.
PCT Written Opinion; PCT International Application PCT/GB98/02713; Jun. 8, 1999.
PCT International Examination and Search Report, PCT International Application PCT/GB96/02802; Jan. 15, 1998 & Apr. 29, 1997.
PCT Written Opinion, PCT International Application PCT/GB96/02802; Sep. 3, 1997.
Dattilo, Philip P., Jr., et al; "Medical Textiles: Application of an Absorbable Barbed Bi-directional Surgical Suture"; Journal of Textile and Apparel, Technology and Management, vol. 2, Issue 2, Spring 2002, pp. 1-5.
Kostyuchenok, B.M., et al; "Vacuum Treatment in the Surgical Management of Purulent Wounds"; Vestnik Khirurgi, Sep. 1986, pp. 18-21 and 6 page English translation thereof.
Davydov, Yu. A., et al; "Vacuum Therapy in the Treatment of Purulent Lactation Mastitis"; Vestnik Khirurgi, May 14, 1986, pp. 66-70, and 9 page English translation thereof.
Yusupov. Yu. N., et al; "Active Wound Drainage", Vestnik Khirurgi, vol. 138, Issue 4, 1987, and 7 page English translation thereof.
Davydov, Yu. A., et al; "Bacteriological and Cytological Assessment of Vacuum Therapy for Purulent Wounds"; Vestnik Khirurgi, Oct. 1988, pp. 48-52, and 8 page English translation thereof.
Davydov, Yu. A., et al; "Concepts for the Clinical-Biological Management of the Wound Process in the Treatment of Purulent Wounds by Means of Vacuum Therapy"; Vestnik Khirurgi, Jul. 7, 1980, pp. 132-136, and 8 page English translation thereof.
Chariker, Mark E., M.D., et al; "Effective Management of incisional and cutaneous fistulae with closed suction wound drainage"; Contemporary Surgery, vol. 34, Jun. 1989, pp. 59-63.
Egnell Minor, Instruction Book, First Edition, 300 7502, Feb. 1975, pp. 24.
Egnell Minor: Addition to the Users Manual Concerning Overflow Protection—Concerns all Egnell Pumps, Feb. 3, 1983, p. 1.
Svedman, P.: "Irrigation Treatment of Leg Ulcers", The Lancet, Sep. 3, 1983, pp. 532-534.
Chinn, Steven D. et al.: "Closed Wound Suction Drainage", The Journal of Foot Surgery, vol. 24, No. 1, 1985, pp. 76-81.
Arnljots, Björn et al.: "Irrigation Treatment in Split-Thickness Skin Grafting of Intractable Leg Ulcers", Scand J. Plast Reconstr. Surg., vol. 19, 1985, pp. 211-213.
Svedman, P.: "A Dressing Allowing Continuous Treatment of a Biosurface", IRCS Medical Science: Biomedical Technology, Clinical Medicine, Surgery and Transplantation, vol. 7, 1979, p. 221.
Svedman, P. et al.: "A Dressing System Providing Fluid Supply and Suction Drainage Used for Continuous or Intermittent Irrigation", Annals of Plastic Surgery, vol. 17, No. 2, Aug. 1986, pp. 125-133.
K.F. Jeter, T.E. Tintle, and M. Chariker, "Managing Draining Wounds and Fistulae: New and Established Methods," Chronic Wound Care, edited by D. Krasner (Health Management Publications, Inc., King of Prussia, PA 1990), pp. 240-246.
G. Živadinovic, V. Đukić, Ž. Maksimović, Đ. . Radak, and P. Peška, "Vacuum Therapy in the Treatment of Peripheral Blood Vessels," Timok Medical Journal 11 (1986), pp. 161-164 (copy and certified translation).
F.E. Johnson, "An Improved Technique for Skin Graft Placement Using a Suction Drain," Surgery, Gynecology, and Obstetrics 159 (1984), pp. 584-585.
A.A. Safronov, Dissertation Abstract, Vacuum Therapy of Trophic Ulcers of the Lower Leg with Simultaneous Autoplasty of the Skin (Central Scientific Research Institute of Traumatology and Orthopedics, Moscow, U.S.S.R. 1967) (copy and certified translation).
M. Schein, R. Saadia, J.R. Jamieson, and G.A.G. Decker, "The 'Sandwich Technique' in the Management of the Open Abdomen," British Journal of Surgery 73 (1986), pp. 369-370.
D.E. Tribble, "An Improved Sump Drain-Irrigation Device of Simple Construction," Archives of Surgery 105 (1972) pp. 511-513.
C.E. Tennant, "The Use of Hypermia in the Postoperative Treatment of Lesions of the Extremities and Thorax," Journal of the American Medical Association 64 (1915), pp. 1548-1549.
Selections from W. Meyer and V. Schmieden, Bier's Hyperemic Treatment in Surgery, Medicine, and the Specialties: A Manual of Its Practical Application, (W.B. Saunders Co., Philadelphia, PA 1909), pp. 17-25, 44-64, 90-96, 167-170, and 210-211.
V.A. Solovev et al., Guidelines, The Method of Treatment of Immature External Fistulas in the Upper Gastrointestinal Tract, editor-in-chief Prov. V.I. Parahonyak (S.M. Kirov Gorky State Medical Institute, Gorky, U.S.S.R. 1987) ("Solovev Guidelines").
V.A. Kuznetsov & N.A. Bagautdinov, "Vacuum and Vacuum-Sorption Treatment of Open Septic Wounds," in II All-Union Conference on Wounds and Wound Infections: Presentation Abstracts, edited by B.M. Kostyuchenok et al. (Moscow, U.S.S.R. Oct. 28-29, 1986) pp. 91-92 ("Bagautdinov II").
V.A. Solovev, Dissertation Abstract, Treatment and Prevention of Suture Failures after Gastric Resection (S.M. Kirov Gorky State Medical Institute, Gorky, U.S.S.R. 1988) ("Solovev Abstract").
V.A.C.® Therapy Clinical Guidelines: A Reference Source for Clinicians (Jul. 2007).

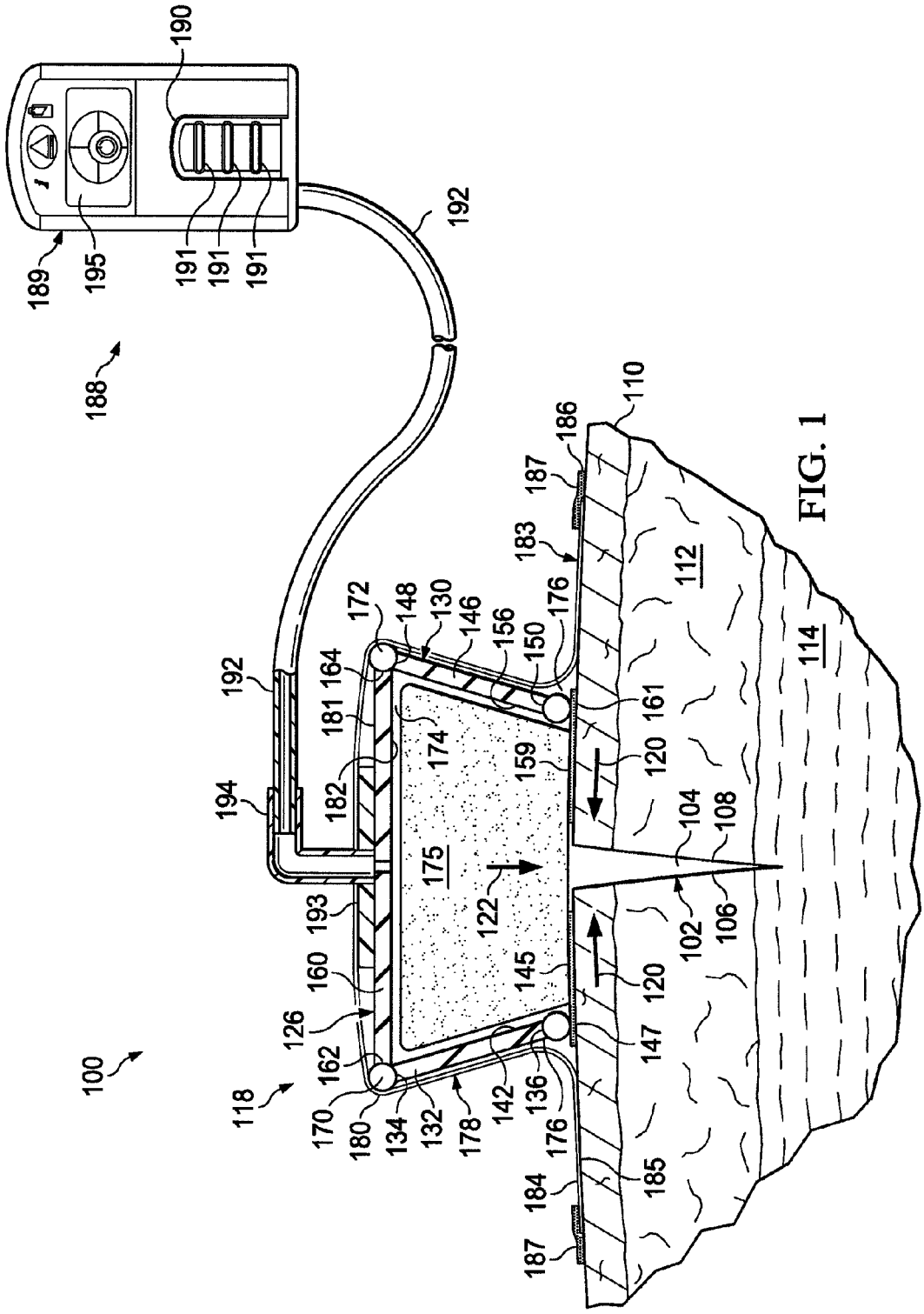
100
188
189
190
191
191
191
192
192
193
194
195
102
104
106
108
110
112
114
118
120
120
122
126
130
132
134
136
142
145
146
147
148
150
156
159
160
161
162
164
170
172
174
175
176
176
178
180
181
182
183
184
185
186
187
187

FIG. 1

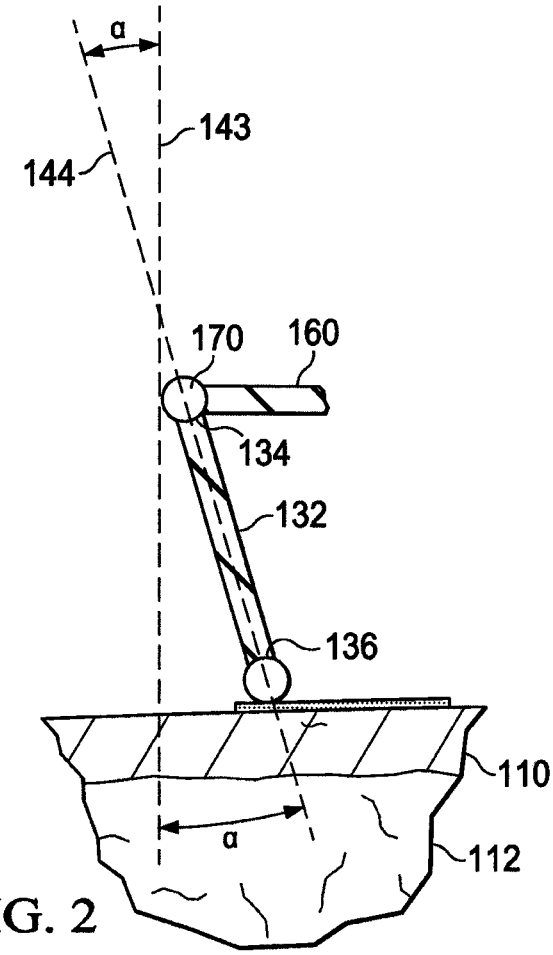

FIG. 2

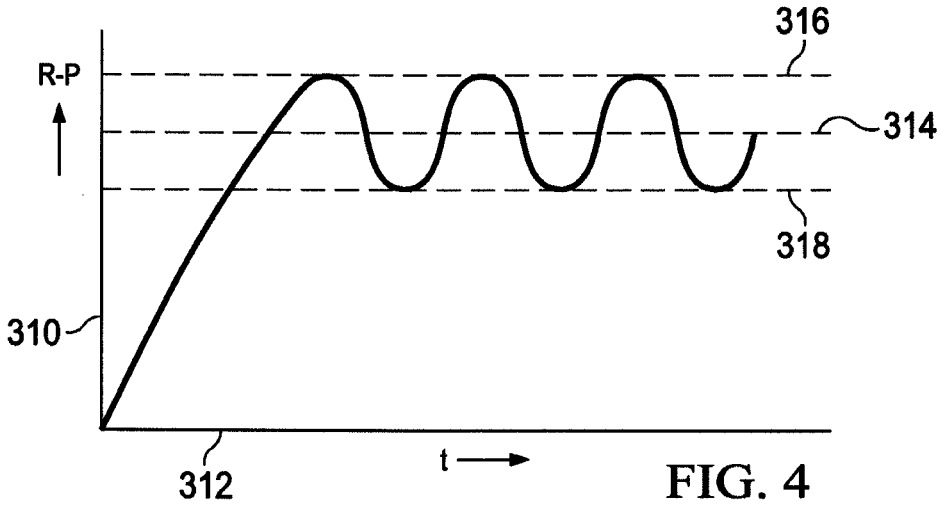

FIG. 4

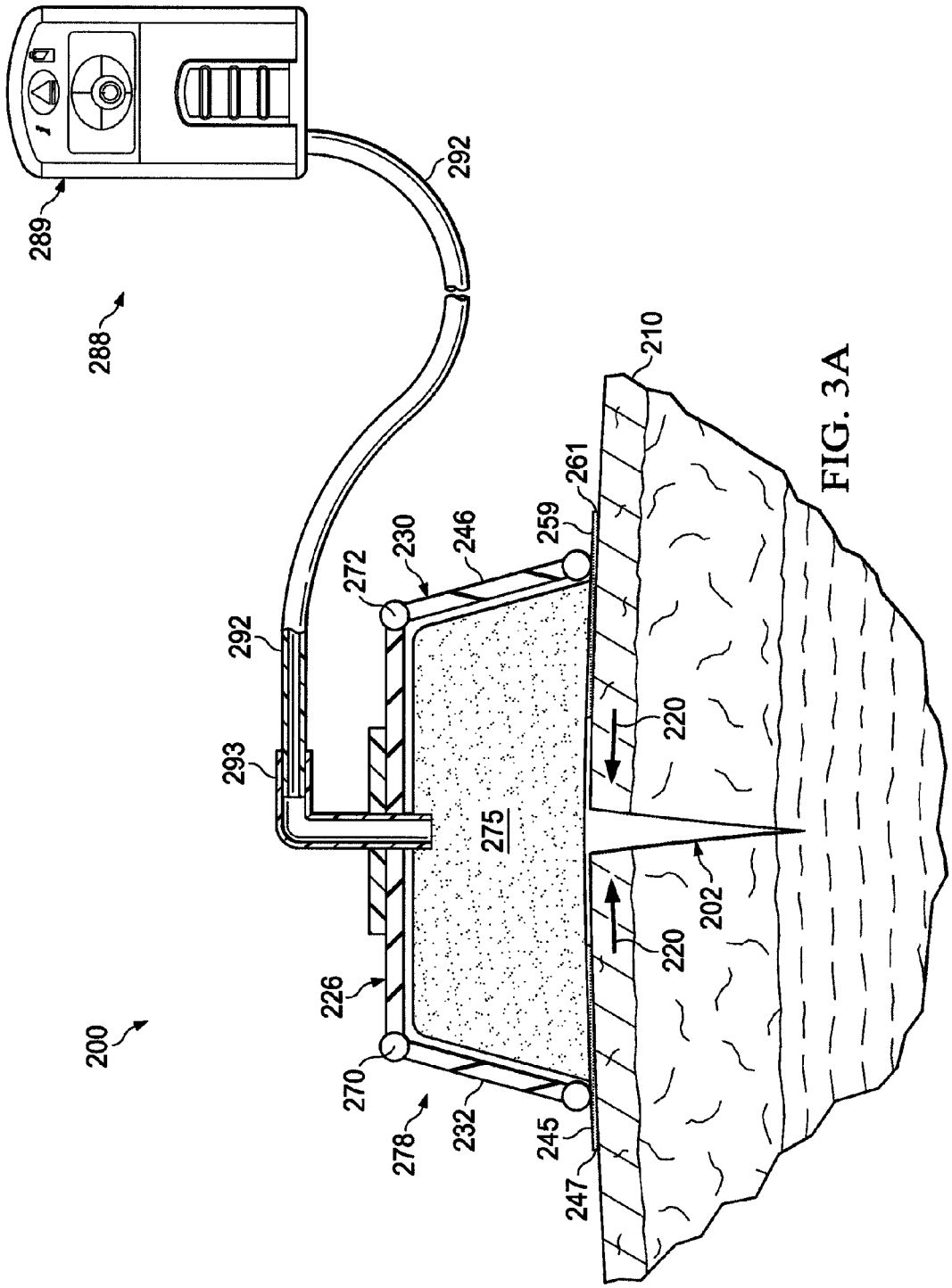
289
288
292
292
293
272
230
246
259
261
210
220
220
275
202
226
200
270
278
232
245
247

FIG. 3A

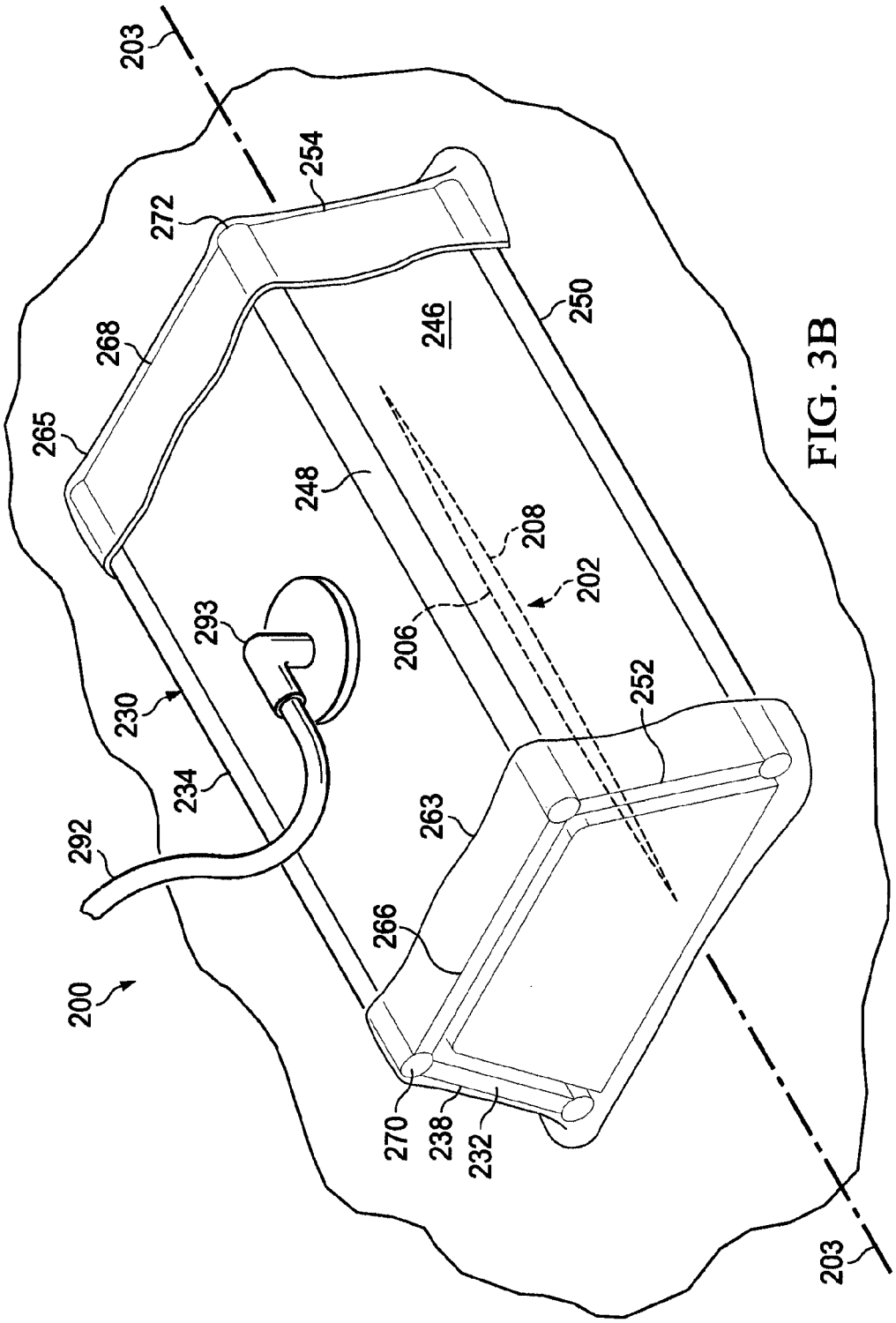
203
254
272
268
265
246
250
248
208
202
206
293
230
252
234
263
292
266
200
270
238
232
203

FIG. 3B

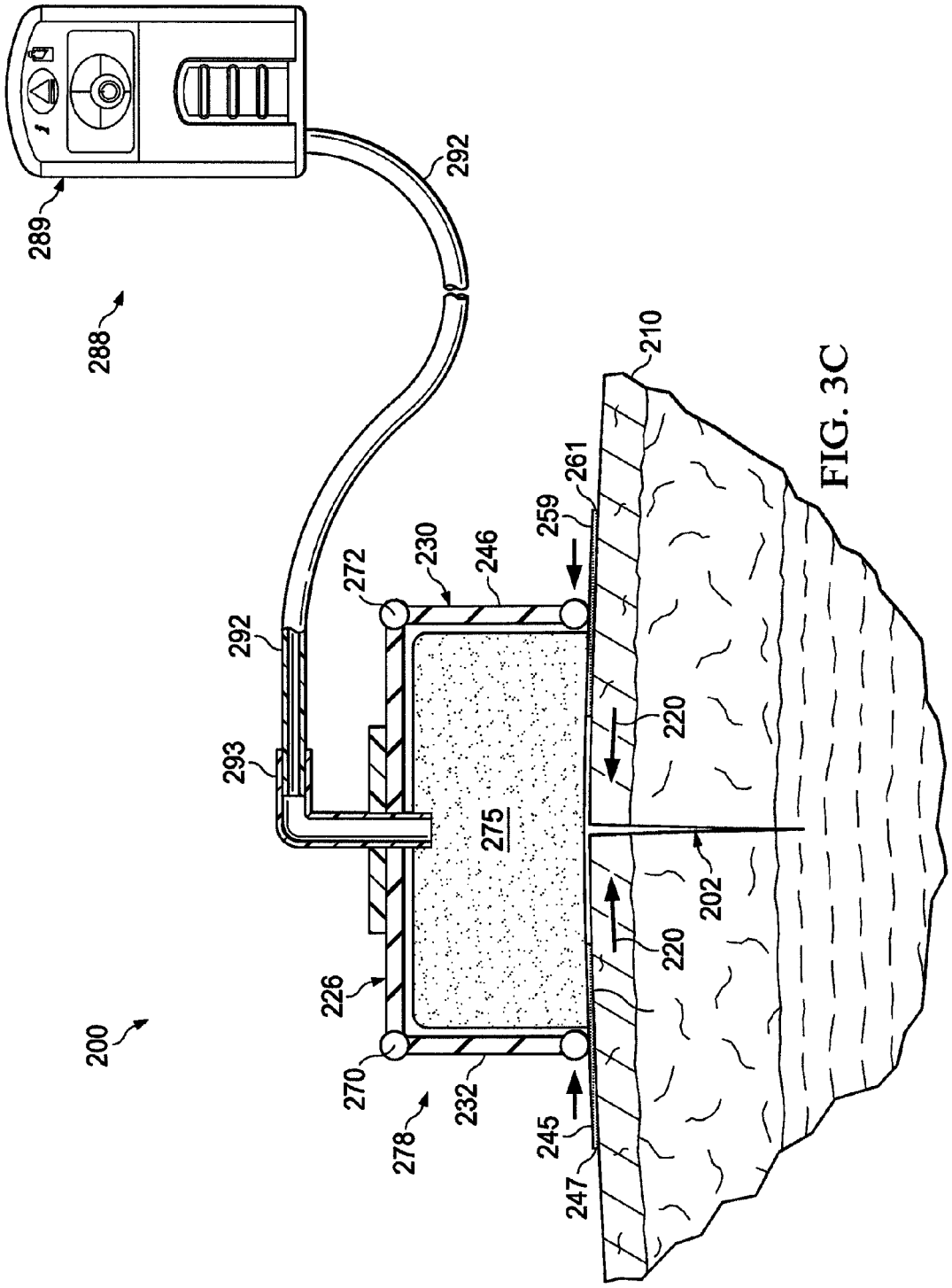
289
288
292
292
293
272
230
246
259
261
210
220
220
275
202
226
200
270
278
232
245
247

FIG. 3C

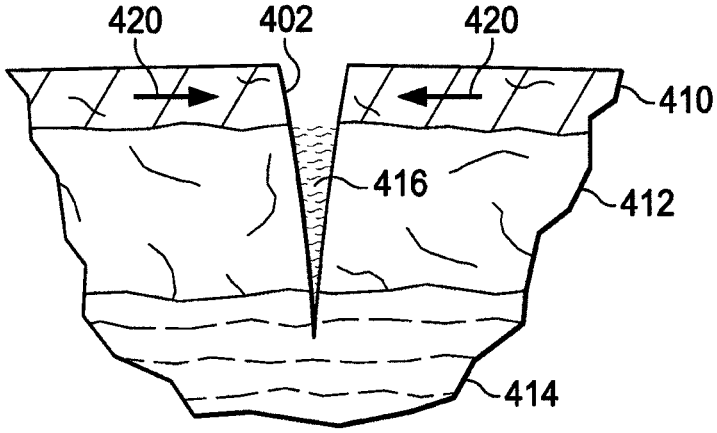
420
402
420
410
416
412
414

FIG. 5

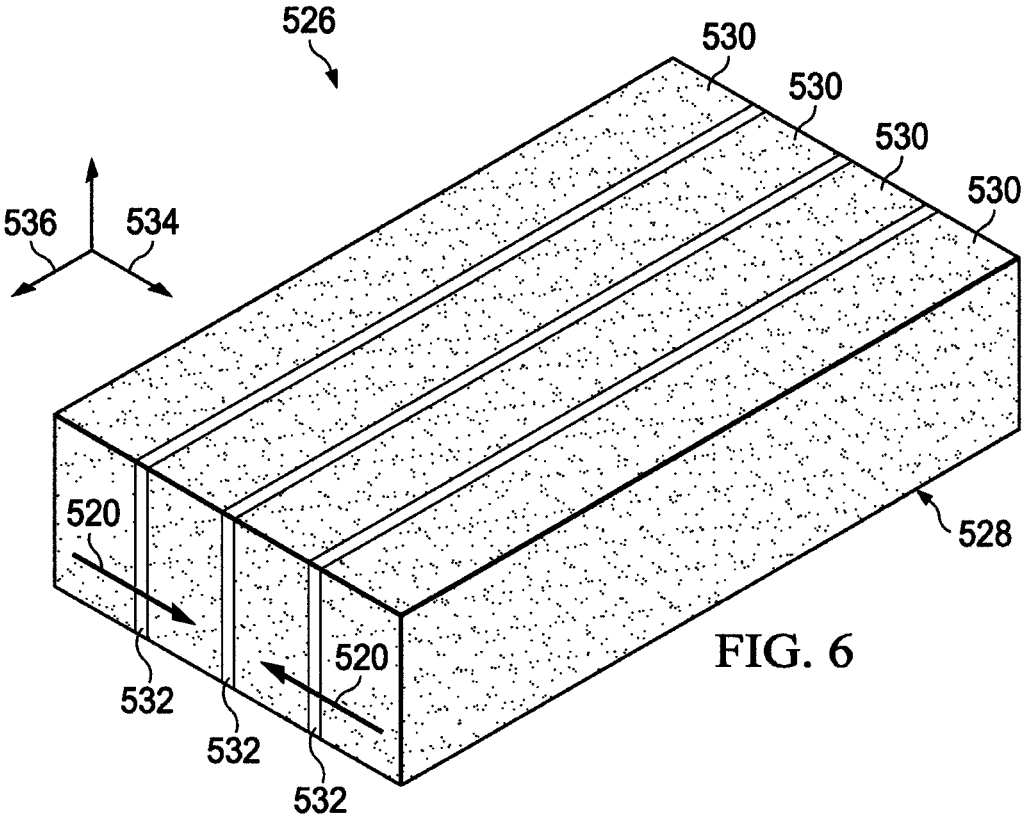
526
530
530
530
530
536
534
520
520
532
532
532
528

FIG. 6

REDUCED-PRESSURE, LINEAR WOUND CLOSING BOLSTERS AND SYSTEMS

RELATED APPLICATIONS

The present invention is a divisional application of U.S. patent application Ser. No. 13/456,201, filed Apr. 25, 2012 which is a divisional application of U.S. patent application Ser. No. 12/475,388, filed May 29, 2009 now U.S. Pat. No. 8,187,237 which claims the benefit, under 35 USC §119(e), of the filing of U.S. Provisional Patent Application Ser. No. 61/078,114, entitled "Reduced-Pressure, Linear-Wound Treatment System," filed Jul. 3, 2008; and U.S. Provisional Patent Application Ser. No. 61/057,803, entitled "Reduced-Pressure, Linear Wound Closing Bolster and System," filed May 30, 2008. All of these provisional applications are incorporated herein by reference for all purposes.

BACKGROUND

The present invention relates generally to medical treatment systems, and more particularly, to reduced-pressure, linear wound closing bolsters and systems.

Physicians perform millions of surgical procedures each year around the world. Many of the procedures are performed as open surgery and an increasing number are performed using minimally invasive surgery, such as arthroscopic, laparoscopic, and endoscopic procedures. However performed, surgical procedures involve acute wounds, e.g., an incision, in the skin and related tissue. In many instances, the incision is closed at the conclusion of the procedure using a mechanical apparatus, such as staples or sutures, and the wound is merely covered with a dry, sterile bandage.

The use of staples or sutures to close an acute wound may have undesirable side effects. For example, staples and sutures can proximate the wound edges tightly where they are applied, but in between such mechanical closing devices are gaps or areas that are not as tightly closed. This may lead to areas of high stress proximate the closing device interspersed with areas of relatively low stress in between. This may, in turn, influence scarring, healing time, and strength of the wound.

BRIEF SUMMARY

Shortcomings with certain aspects of linear wound care are addressed by the present invention as shown and described in a variety of illustrative embodiments herein. "Linear wound" refers generally to a laceration or incision whether in a line or not. According to an illustrative embodiment, a reduced-pressure, linear-wound closing bolster for managing a linear wound includes a pivotable frame having a first closing member, a second closing member, and an interior space. The pivotable frame is operable to move between an extended position and a contracted position. The closing bolster further includes a manifold member disposed within the interior space, a first gripping member coupled to the first closing member, and a second gripping member coupled to the second closing member. The first gripping member is for transmitting a closing force from the first closing member to a first edge of the linear wound. The second gripping member is for transmitting a closing force from the second closing member to a second edge of the linear wound.

According to another illustrative embodiment, a reduced-pressure, linear-wound closing bolster includes a first closing member for placing on a first side of the linear wound, a second closing member for placing on a second side of the linear wound, and a first connecting member. The bolster also includes a first pivot connector coupling a portion of the first closing member and the connecting member, a second pivot connector coupling a portion of the second member and the connecting member, and a manifold member coupled to an interior surface of the first closing member and an interior surface of the second closing member. The manifold member contracts when placed under a reduced pressure. The bolster also includes an interface fluidly coupled to the manifold for delivering a reduced pressure thereto.

According to another illustrative embodiment, a reduced-pressure, linear wound treatment system includes a closing bolster for placing on the patient's skin over a linear wound and operable to move between an extended position and a compressed position. The closing bolster comprises a pivotable frame having an interior space and a manifold disposed within the interior space and coupled to the pivotable frame. The system includes a sealing subsystem for providing a fluid seal between the closing bolster and the patient, and a reduced-pressure subsystem for delivering a reduced pressure to the sealing subsystem. The sealing subsystem and reduced-pressure subsystem are operable to deliver a reduced pressure to the closing bolster, and the closing bolster is operable under reduced pressure to go to the compressed position and thereby develop an inward force.

According to one illustrative embodiment, a reduced-pressure, anisotropic closing bolster includes an anisotropic manifold member operable under reduced pressure to contract more in a lateral direction than in a longitudinal direction. The anisotropic manifold member includes a plurality of longitudinal manifold members of a flexible manifold material, a plurality of reinforcing members, and an anisotropic bolster body formed by coupling the plurality of longitudinal manifold members and the plurality of reinforcing members. The anisotropic bolster body is operable under reduced pressure to contract more perpendicularly to the plurality of reinforcing members than parallel to the plurality of reinforcing members.

According to another illustrative embodiment, a method of applying a closing force to a linear wound on a patient includes providing a reduced-pressure, linear-wound closing bolster. Wherein the reduced-pressure, linear-wound closing bolster includes a manifold member and a pivotable frame that has an interior space and a first closing member and a second closing member. The first closing member has a first longitudinal edge and a second longitudinal edge. The second closing member has first longitudinal edge and a second longitudinal edge. The method includes placing the second longitudinal edge of the first closing member proximate a first edge of the linear wound and placing the second longitudinal edge of the second closing member proximate a second edge of the linear wound. The method also includes forming a fluid seal between the pivotable frame and the patient's skin, coupling a reduced-pressure subsystem to an interface to the manifold member, and activating the reduced-pressure source.

According to another illustrative embodiment, a method of manufacturing a reduced-pressure, linear-wound closing bolster includes forming a pivotable frame having first closing member, a second closing member, and an interior space, the pivotable frame operable to move between an extended position and a contracted position. The method includes disposing a manifold member within the interior space and providing a first gripping member operable to transmit a closing force from the first closing member to a first edge of a linear wound. The method also includes providing a second gripping member operable to transmit a closing force from the second

closing member to a second edge of the linear wound. The method may further include coupling the manifold member to the pivotable frame such that when a reduced pressure is applied, the pivotable frame is urged from the extended position to the contracted position.

According to one illustrative embodiment, a reduced-pressure, linear-wound closing bolster for managing a linear wound includes a first closing member, a second closing member, a pivot connector coupling the first closing member and second closing member, and an interior space formed at least in part by the first closing member and the second closing member. The pivot connector is operable to move between an extended position and a compressed position. The closing bolster further includes a manifold member disposed within the interior space and coupled to the first closing member and second closing member such that when reduced pressure is applied, the pivotable frame is urged from the extended position to the compressed position. The closing bolster also includes a first gripping member for transmitting a closing force from the first closing member to a first edge of a linear wound and a second gripping member for transmitting a closing force from the second closing member to a second edge of the linear wound.

The illustrative embodiments may provide a number of advantages. A couple of examples follow. Technical advantages of the illustrative embodiments are perceived to include that the wound might be able to withstand more force during the healing process. Additionally, the wound edges that otherwise would not be tightly and smoothly approximated are healed in a tight position with the edges approximated. The time for the wound to gain strength may be decreased. It may also reduce the scar formation at the wound. These are just some possible examples.

Other objects, features, and advantages of the illustrative embodiments will become apparent with reference to the drawings and detailed description that follow.

BRIEF DESCRIPTION OF THE DRAWINGS

A more complete understanding of the method and apparatus of the present invention may be obtained by reference to the following Detailed Description when taken in conjunction with the accompanying Drawings wherein:

FIG. **1** is a schematic, cross-sectional view of an illustrative embodiment of a reduced-pressure, linear wound closing system;

FIG. **2** is a schematic detail of a first closure member of the illustrative embodiment of FIG. **1**;

FIG. **3**A is a schematic, cross-sectional view of an illustrative embodiment of a reduced-pressure, linear wound closing bolster shown in an extended position;

FIG. **3**B is a schematic, perspective view of the closing bolster of FIG. **3**A also shown in the extended position;

FIG. **3**C is a schematic, cross-sectional view of the closing bolster of FIGS. **3**A and **3**B shown in a compression position;

FIG. **4** is a schematic diagram showing one possible pattern for a dynamic reduced pressure delivered to a reduced-pressure, linear wound closure system;

FIG. **5** is a schematic, cross-sectional view of a linear wound showing the development of collagen parallel to the closing force applied; and

FIG. **6** is a schematic, perspective view of another illustrative embodiment of a closing bolster.

DETAILED DESCRIPTION

In the following detailed description of the illustrative embodiments, reference is made to the accompanying drawings that form a part hereof, and in which is shown by way of illustration specific preferred embodiments in which the invention may be practiced. These embodiments are described in sufficient detail to enable those skilled in the art to practice the invention, and it is understood that other embodiments may be utilized and that logical structural, mechanical, electrical, and chemical changes may be made without departing from the spirit or scope of the invention. To avoid detail not necessary to enable those skilled in the art to practice the invention, the description may omit certain information known to those skilled in the art. The following detailed description is, therefore, not to be taken in a limiting sense, and the scope of the present invention is defined only by the appended claims.

Referring to FIGS. **1** and **2** an illustrative embodiment of a reduced-pressure linear wound closing system **100** for treating a linear wound **102**, such as a laceration or, more typically, an incision **104** is presented. Linear wound **102** has a first edge **106** and a second edge **108**. While linear wound **102** may extend to different depths, it is shown as an incision **104** extending through epidermis **110**, dermis **112**, and into subcutaneous tissue, or hypodermis, **114**.

A dressing assembly **118** may be placed over the linear wound **102** and used with reduced pressure to supply an inward, or closing, force **120**, and a compressive force **122** may be developed as well. Dressing assembly **118** includes a closing bolster **126** that is moveable between an extended position (e.g., FIG. **1**) and a compression position. A sealing subsystem **178** provides a fluid seal between the dressing assembly **118** and the patient's epidermis **110**. A reduced-pressure subsystem **188** provides reduced pressure to an interior portion of the dressing assembly **118** and causes the closing bolster **126** to be urged from the extended position to the compressed position and thereby provides the inward, closing force **124** to both edges **106**, **108** of the linear wound **102**.

Closing force **120** remains primarily within epidermis **110** and dermis **112**. The closing force **120** may provide a smooth, tight approximation of edges **106** and **108** of the linear wound **102**. In addition, system **100** is operable to deliver a reduced pressure to incision **104** that may also be realized at the level of any subcutaneous voids to help approximate—bring together—the tissues in that region as well as to help remove any air or any other fluids. The term "fluid" as used herein generally refers to gas or liquid, but may also include any other flowable material. A downward (for the orientation of FIG. **1**) compression force **122** may also be developed.

The dressing assembly **118** may include closing bolster **126** and over-drape **180**. The closing bolster **126** may be formed in many ways and has the effect of developing a closing force **120** when placed under reduced pressure. System **100** may further provide a compressive force **122**, and at the same time, manifold reduced pressure to the linear wound **102** for reduced pressure treatment.

In the illustrative embodiment of FIG. **1**, closing bolster **126** is formed with a pivotable frame **130**. To form the pivotable frame **130** of FIG. **1**, a first closing member **132**, second closing member **146**, and a connection member **160** are coupled as will be described. The members of pivotable frame **130** may be made of any material, e.g., a medical grade silicone. The members of the pivotable frame **130** may be extruded, pour molded, injection molded, blow molded, or formed by other manufacturing techniques. The pivotable frame **130** is open on the ends (first end and second end, or proximal end and distal end) as the pivotable frame is deployed on the epidermis **110** and over the linear wound **102**, but is covered by the over-drape **180** for use.

The first closing member **132** has a first longitudinal edge **134**, second longitudinal edge **136**, a first lateral edge (analogous to lateral edge **238** in FIG. **3**B), second lateral edge (analogous to lateral edge **240** in FIG. **3**B), an interior surface **142**, and a lateral axis **144** (FIG. **2**). Similarly, the second closing member **146** has a first longitudinal edge **148**, second longitudinal edge **150**, a first lateral edge (analogous to lateral edge **252** in FIG. **3**B), second lateral edge (analogous to lateral edge **254** in FIG. **3**B), an interior surface **156**, and a lateral axis analogous to axis **144** (FIG. **2**). The connection member **160** has a first longitudinal edge **162**, a second longitudinal edge **164**, a first lateral edge (analogous to first lateral edge **266** in FIG. **3**B), and a second lateral edge (analogous to second lateral edge **268** in FIG. **3**B).

The first longitudinal edge **134** of the first closing member **132** is pivotably coupled by a first pivot connector **170** to the first longitudinal edge **162** of the connection member **160**. The first longitudinal edge **148** of the second closing member **146** is pivotably coupled by a second pivot connector **172** to the second longitudinal edge **164** of the connection member **160**. Together, the pivotably coupled first closing member **132**, second closing member **146**, and connection member **160** form the pivotable frame **130** and further defines an interior space **174**. In one variation, the pivotable frame **130** may be formed by using a first pivot connector to couple the first longitudinal edge **134** of the first closing member **132** to the first longitudinal edge **148** of the second closing member **146**.

The first pivot connector **170** may be any device or system that holds the first longitudinal edge **134** of the first closing member **132** to the first longitudinal edge **162** of the connection member **160** (or first longitudinal edge **143** of the second closing member **146**) and allows relative movement. The first pivot connector **170** may be, for example, a piano hinge, a living hinge, butterfly hinge, strap hinge, a filament-tape connection, tape, etc. The pivot connector **170** may also be a relief in a sheet of material that allows the sheet to fold and bend along an edge. The other connectors herein, e.g., connector **172**, may also be any type of connector, such as those referenced in this paragraph.

A first gripping member **145** may be associated with the second longitudinal edge **136** of the first closing member **132**, and a second gripping member **159** may be associated with the second longitudinal edge **150** of the second closing member **146**. The gripping member **145**, **159** may be a first adhesive strip **147** and a second adhesive strip **161**, respectively. Alternatively, the edges **136**, **150** may have high-friction members, e.g., soft silicone, added that are able to provide a friction interface with the skin such that as the edges **136**, **150** are moved the skin moves with the edges **136**, **150** without any significant slipping therebetween. The gripping member **145** and **159** are operable to transmit the inward, closing forces **120** from the closing members **132** and **146** to the patient's skin and thereby urge the edges **106** and **108** of the linear wound **102** into close approximation.

A manifold member **175** is disposed within the interior space **174** of the pivotable frame **130** and may be coupled to the interior surface **142** of first closing member **132** and to the interior surface **156** of second closing member **146**. In an alternative embodiment, the manifold member **175** may not be coupled to the interior space **174** and reduced pressure may primarily move the first closing member **132** and second closing member **146** towards each other. The manifold member **175** contracts when placed under reduced pressure and is operable to distribute a reduced pressure to the linear wound **102**. The manifold member **175** may be made from many possible manifold materials.

The term "manifold" as used herein as a noun generally refers to a substance or structure that is provided to assist in applying reduced pressure to, delivering fluids to, or removing fluids from a tissue site. In one illustrative embodiment, the manifold member **175** is made from a porous and permeable foam-like material and, more particularly, a reticulated, open-cell polyurethane or polyether foam that allows good permeability of wound fluids while under a reduced pressure. One such foam material that has been used is the VAC® Granufoam® Dressing available from Kinetic Concepts Inc. (KCI) of San Antonio, Tex. Any material or combination of materials might be used for the bolster material provided that the bolster material is operable to manifold the reduced pressure and contract under reduced pressure. A manifold typically includes a plurality of flow channels or pathways that are interconnected to improve distribution of fluids provided to and removed from the area of tissue around the manifold. Examples of manifolds may include without limitation devices that have structural elements arranged to form flow channels, cellular foam such as open-cell foam, porous tissue collections, and liquids, gels and foams that include or cure to include flow channels. The bolster material might also be a combination or layering of materials; for example, a first bolster layer of hydrophilic foam might be disposed adjacent to a second bolster layer of hydrophobic foam to form the bolster material.

The reticulated pores of the Granufoam® material, that are in the range of about 400 to 600 microns, are helpful in carrying out the manifold function, but other materials may be used. A material with a higher density (smaller pore size) than Granufoam® material may be desirable in some situations. The manifold member **175** may be a reticulated foam that is later felted to a thickness of about ⅓ the manifold member's **175** original thickness. Among the many possible materials, the following might be used: Granufoam® material or a Foamex technical foam (www.foamex.com). In some instances it may be desirable to add ionic silver to the foam in a microbonding process or to add other substances to the manifold member **175** such as antimicrobial agents. The manifold member **175** may be isotropic or anisotropic depending on the exact orientation of the forces **120**, **122** that are desired during reduced pressure. The manifold member **175** could also be a bio-absorbable material.

Sealing subsystem **178** may include an over-drape **180**, or drape, which has a first side **181** and a second side **182**. The over-drape **180** covers the dressing **118** and extends past a peripheral edge **176** of bolster **126** to form a drape extension **183**. Drape extension **183** has a first side **184** and a second side **185**. A sealing apparatus **186** may be used to seal the drape extension **183** to the patient. Sealing apparatus **186** may take numerous forms, such as an adhesive sealing tape **187**, or drape tape or strip; double-side drape tape; adhesive; paste; hydrocolloid; hydrogel; or other sealing device. If a tape **187** is used, the tape **187** may be formed of the same material as the over-drape **180** with a pre-applied, pressure-sensitive adhesive on the second side **185** of the extension **183**. An adhesive might also be used to provide a substantially fluid seal between the over-drape **180** and the epidermis **110** of the patient. Before the over-drape **180** is applied to the patient, the adhesive may have removable strips covering the adhesive removed, or the drape **180** may be applied and the tape **187** placed to form a seal.

Over-drape **180** may be an elastomeric material that has pore sizes less than about 20 microns. "Elastomeric" means having the properties of an elastomer and generally refers to a polymeric material that has rubber-like properties. More specifically, most elastomers have elongation rates greater

than 100% and a significant amount of resilience. The resilience of a material refers to the material's ability to recover from an elastic deformation. Examples of elastomers may include, but are not limited to, natural rubbers, polyisoprene, styrene butadiene rubber, chloroprene rubber, polybutadiene, nitrile rubber, butyl rubber, ethylene propylene rubber, ethylene propylene diene monomer, chlorosulfonated polyethylene, polysulfide rubber, polyurethane, EVA film, co-polyester, and silicones. Over-drape materials may include a silicone, 3M Tegaderm® drape material, acrylic drape material such as one available from Avery, or an incise drape material.

The over-drape **180** may or may not be coupled to the bolster **126**. If coupled, the coupling may occur in many ways. Over-drape **180** and bolster **126** may be coupled using adhesives such as an acrylic adhesive, silicone adhesive, hydrogel, hydrocolloid, etc. Over-drape **180** and bolster **126** may be bonded by heat bonding, ultrasonic bonding, and radio frequency bonding, etc. The coupling may occur in patterns or more completely. Structure might be added to the bond to make the over-drape **180** behave anisotropically in a desired direction, i.e. to make an anisotropic drape material. An anisotropic drape material helps the dressing assembly **118** to primarily move in a given direction, i.e. only about a certain axis or axes. This may be particularly useful in a closing application.

Reduced-pressure subsystem **188** includes a reduced-pressure source **189**, which can take many different forms. Reduced-pressure source **189** provides a reduced pressure as a part of system **100**. The term "reduced pressure" as used herein generally refers to a pressure less than the ambient pressure at a tissue site that is being subjected to treatment. In most cases, this reduced pressure will be less than the atmospheric pressure at which the patient is located. Alternatively, the reduced pressure may be less than a hydrostatic pressure of tissue at the tissue site. It is often desirable for the reduced-pressure source **189** to develop a continuous reduced pressure below atmospheric pressure and also to be able to deliver a dynamic pressure, i.e., to vary the reduced pressure in a cycle or operate in a continuous or intermittent mode. The operable range of reduced pressure may vary widely as needed, but would typically include 200 mm Hg below atmospheric. In order to maximize patient mobility and ease, reduced-pressure source **189** may be a battery-powered, single-use reduced-pressure generator. Such a pressure source **189** facilitates application in the operating room and provides mobility and convenience for the patient during the rehabilitation phase.

In the illustrative embodiment of FIG. **1**, the reduced-pressure source **189** is shown having a battery compartment **195** and a canister region **190** with windows **191** providing a visual indication of the level of fluid within canister **190**. An interposed membrane filter, such as hydrophobic or oleophobic filter, might be interspersed between a conduit, or tubing, **192** and the reduced-pressure source **189**.

The reduced pressure developed by reduced-pressure source **189** is delivered through the delivery tube or conduit **192** to an interface **193**, which might be an elbow port **194**. In one illustrative embodiment, port **194** is a TRAC® technology port available from KCI of San Antonio, Tex. Interface **193** allows the reduced pressure to be delivered to the sealing subsystem **178** and received by the manifold member **175**.

In the embodiment of FIGS. **1** and **2**, application of reduced pressure from the reduced-pressure subsystem **188** causes the manifold member **175** to contract inward, but because over-drape **180** surrounds the pivotal frame **130**, there is also a downward (for the orientation shown) force placed on the pivotal frame **130**. In this particular embodiment, it is desirable to orient the members of the pivotal frame **130** so that the downward force will be translated into a contribution to the closing force **120**. As shown in FIG. **2**, this may be accomplished by placing the closing members **132** and **146** with an inward orientation. For example, first closing member **132** is shown in cross-section having a lateral axis **144** that makes an angle α with a reference line or axis **143** that is normal to epidermis **110**. Thus, the inward angle α means that as a force is applied downward on connection member **160**, the force will urge first member **132** to pivot about first pivot connection **170** and want to collapse inward. This helps to urge the epidermis **110** in the direction of the linear wound **102**.

In operation, reduced-pressure, linear wound closing system **100** may be applied to further assist mechanical closure devices such as sutures or staples already applied, or may be the only and primary closing source for linear wound **102**. In either case, the system **100** is applied by placing the first closing member **132** on first wound edge **106** and the second closing member **146** on the second wound edge **108**. Gripping member **145** on second longitudinal edge **136** is used to engage first edge **106** of the wound **102**. In the particular embodiment shown, the first gripping member **145** is an adhesive strip **147**. Thus, the healthcare provider would remove visible backing from the adhesive strip **147** and the adhesive strip **147** would be applied proximate first edge **106**. In a similar manner, the second gripping member **159** in this embodiment is an adhesive strip **161**, and a backing may be removed and the strip **161** applied proximate the second edge **108** of the linear wound **102**. Adhesive strips **147** and **161** are applied near edges **106** and **108** in a manner that places the closing members **132** and **146** at an inward angle as described earlier in connection with FIG. **2**. It should be noted that in this particular embodiment, the manifold member **175** has already been placed within interior space **174** formed by the pivotal frame **130**, but in other applications the manifold member **175** could be inserted just prior to applying the gripping members **145** and **159** to the epidermis **110**. If the overdrape **180** has not already been coupled to an exterior surface of the pivotable frame **130**, the overdrape **180** is then placed over the frame **130** and caused to extend beyond the peripheral edges **170** to form the drape extensions **183**. In this particular embodiment, adhesive tape **187** is then applied to make sure a fluid seal is formed between drape **180** and the patient's epidermis **110**. Reduced-pressure interface **193** is applied and is coupled to delivery tube **192**, which in turn is coupled to the reduced-pressure source **189**.

Reduced-pressure source **189** may then be activated to deliver reduced pressure to the sealing subsystem **178** and in particular to the manifold member **175**. Subject to reduced pressure, manifold member **175** contracts and is compressed down along with the pivotal frame **130**. The combination of forces urges the second lateral edges **140** and **154** towards each other and towards wound **102**, provides some compression force down, and manifolds reduced pressure to the wound **102**.

Referring to FIGS. **3**A, **3**B, and **3**C, another embodiment of a reduced-pressure, linear-wound closure system **200** is presented. Many of the parts are analogous to those of system **100** of FIGS. **1** and **2** and the possible relationship presented as such by simply indexing the numbers by 100. Referring particularly to FIG. **3**A, two particular differences are noted. First, the sealing subsystem **278** does not involve the use of an overdrape, but provides a pivotable frame **230** to which a first end cap **263** (FIG. **3**B) and a second end cap **265** (FIG. **3**B) have been added to form a fluid seal. The interface **293** allows reduced pressure to be supplied to the manifold member **275**

without compromising the fluid seal. Second, in application, the closing members **232** and **246** may be allowed to have an outward angle relative to reference line normal to the epidermis (analogous to reference line **143** of FIG. **2**). This is because in this embodiment there will not generally be a downward compression force placed on the pivotable frame **230**. The closing members **232** and **246** are urged together to provide the inward force **220** primarily by contraction of the manifold member **275**. The application of reduced pressure to the manifold member **275** causes the closing bolster **226** to move from an extended position shown in FIGS. **3**A and **3**B to a compression position shown in FIG. **3**C.

Referring to FIG. **3**B, system **200** includes pivotal frame **130**, which is shown positioned with a lengthwise dimension running parallel to wound axis **203** of linear wound **202**. Linear wound **202** has first edge **206** and second edge **208**. The first closing member **232** has first lateral edge **238** and a first longitudinal edge **234**. The second closing member **246** has a first lateral edge **252** and a second lateral edge **254**. The second closing member **246** also has first longitudinal edge **248** and second longitudinal edge **250**.

End caps **263** and **265** may be formed in a number of different ways to provide a fluid seal to the ends of the pivotal frame **130**. In this particular embodiment, they are shown as adhesive portions of an overdrape material that have been applied to cover the end pieces.

In systems **100** and **200**, the reduced pressure delivered by reduced pressure subsystems **188** and **288** may be supplied in a continuous mode or a dynamic reduced pressure mode. In a dynamic mode, the pressure is varied in any number of different types of patterns. For example, referring to FIG. **4**, one particular pattern for the application of reduced pressure is presented. The ordinate axis **310** gives the reduced pressure. It should be understood that an increase in reduced pressure here means that a lower gauge pressure would be shown. The abscissa axis **312** gives the elapsed time. Thus, in this particular pattern, the reduced pressure is ramped up to a baseline level **314** and then varied, in this instance, in a sinusoidal pattern between a greater reduced pressure level **316** and a lower reduced pressure **318**. This variation in reduced pressure causes micromotion of the wound by varying the closing forces, e.g., the variation of the closing forces **120** and **220** of the embodiments of FIG. **1** and FIG. **3**.

Referring now to FIG. **5**, one of the beneficial effects encouraged by use of the dynamic pressure, such as the illustration given in connection with FIG. **4**, is presented. A linear wound **402** through epidermis **410**, dermis **412**, and even into subcutaneous tissue **414** is shown. Linear wound **402** has been subjected to dynamic micromotion for forces **420** which may have been generated by a system such as system **100** or system **200**, FIG. **1** and FIG. **3**, respectively. The micromotion causes the collagen **416** to be deposited in the wound **402** with an orientation that is parallel to the forces **420**.

Referring now to FIG. **6**, another embodiment of a system for providing a closing force to a linear wound is presented. In this system, an anisotropic bolster **526** is formed with an anisotropic body **528**. The anisotropic body **528** comprises an anisotropic manifold member operable under reduced pressure to contract more in a lateral direction, i.e, parallel to force **520**, than in a longitudinal, or lengthwise, direction, i.e., perpendicular to force **520**.

The anisotropic body may be formed in many ways. As one illustrative embodiment, the bolster body **528** may be formed by utilizing a plurality of flexible, or compressible, manifold members **530** and a plurality of reinforcing longitudinal members **532**. The plurality of flexible manifold members **530** may be analogous to the material from which manifold members **175** and **275** were made in previously described embodiments. The reinforcing longitudinal members **532** are formed of a material, or reinforcing material, that inhibits compression along one or more axes or directions. The reinforcing material may also inhibit expansion along one or more axes. The reinforcing material may inhibit both compression and expansion along one or more axes or directions. In one illustrative embodiment, the reinforcing longitudinal members **532** are filaments combined with the manifold members **530** to form the bolster body **528**. It will be appreciated that for the orientation shown, the resulting anisotropic bolster body **528** will be able to contract or compress in a first direction **534**, but not in a substantial way in a second direction **536**.

In operation, the anisotropic closing bolster **526** will be placed down on a linear wound with the lengthwise dimension of the plurality of reinforcing members **532** running parallel to the wound, i.e., with the linear wound substantially parallel to direction **536**. An overdrape analogous to drape **180** of system **100** may be applied over the bolster **526** and an interface, which is analogous to interface **193** of FIG. **1**, may be applied in order to deliver reduced pressure. When reduced pressure is delivered to the anisotropic closing bolster **526**, it will contract in the first direction **534** and this causes inward forces **520** to be directed on both edges of the wound, providing a closing force. The reduced pressure supplied to anisotropic bolster **526** may be dynamically varied as previously discussed or provided in a constant mode.

It should be apparent from the foregoing that an invention having significant advantages has been provided. While the invention is shown in only a few of its forms, it is not just limited but is susceptible to various changes and modifications without departing from the spirit thereof.

I claim:

1. A method of applying a closing force to a linear wound on a patient, the method comprising the steps of:

providing a reduced-pressure, linear-wound closing bolster, wherein the reduced-pressure, linear-wound closing bolster comprises a manifold member and a pivotable frame that has an interior space and a first closing member, which has a first longitudinal edge and a second longitudinal edge, and has a second closing member, which has a first longitudinal edge and a second longitudinal edge;

placing the second longitudinal edge of the first closing member proximate a first edge of the linear wound;

placing the second longitudinal edge of the second closing member proximate a second edge of the linear wound;

forming a fluid seal between pivotable frame and the patient's skin; and

providing a reduced pressure to the interior space of the pivotable frame.

2. The method of claim **1**, wherein the step of providing the reduced pressure to the interior space comprises the step of providing a cyclical pattern of reduced pressure.

3. The method of claim **1**, wherein the step of providing the reduced pressure to the interior space comprises the step of providing a variable pattern of reduced pressure.

4. The method of claim **1**, wherein the manifold member is coupled to the pivotable frame.

5. A method of manufacturing a reduced-pressure, linear-wound closing bolster, the method comprising the steps of:

forming a pivotable frame having a first closing member, a second closing member, and an interior space, the pivotable frame operable to move between an extended position and a compressed position;

disposing a manifold member within the interior space;

providing a first gripping member operable to transmit a closing force from the first closing member to a first edge of a linear wound; and

providing a second gripping member operable to transmit a closing force from the second closing member to a second edge of the linear wound.

6. The method of claim **5** further comprising the step coupling the manifold member to the pivotable frame such that when a reduced pressure is applied, the pivotable frame is urged from the extended position to the compressed position.

7. The method of claim **5** wherein the step of forming the pivotable frame comprises the steps of:

providing a first closing member;

providing a second closing member;

providing a connecting member;

coupling the first closing member and the connecting member with a first pivot connector; and

coupling a second pivot connector to the second closing member and the connecting member.

8. The method of claim **5** wherein the step of forming the pivotable frame comprises:

providing the first closing member;

providing the second closing member;

coupling the first closing member and second closing member with a pivot connector.

9. The method of claim **5** wherein the step of providing the first gripping member comprises the step of coupling a first adhesive strip to the first closing member; and the step of providing the second gripping member comprises coupling a second adhesive strip to the second closing member.

10. The method of claim **5** wherein the step of providing the first gripping member comprises providing a first high-friction member coupled to the first closing member and the step of providing the second gripping member comprises providing a second high-friction member coupled to the second closing member.

11. A reduced-pressure, linear-wound closing bolster for managing a linear wound, the bolster comprising:

a first closing member;

a second closing member;

a pivot connector coupling the first closing member and second closing member;

and an interior space formed at least in part by the first closing member and the second closing member, and wherein the pivot connector is operable to move between an extended position and a compressed position;

a manifold member disposed within the interior space and coupled to the first closing member and second closing member such that when reduced pressure is applied, the pivotable frame is urged from the extended position to the compressed position;

a first gripping member for transmitting a closing force from the first closing member to a first edge of a linear wound; and

a second gripping member for transmitting a closing force from the second closing member to a second edge of the linear wound.

12. A reduced-pressure, linear wound treatment system comprising:

a closing bolster for placing over the linear wound and operable to move between an extended position and a compressed position, the closing bolster comprising a plurality of manifold members compressible in a first direction perpendicular to the linear wound when positioned thereon and a plurality of reinforcing members coupled between the manifold members non-compressive in a second direction parallel to the linear wound when positioned thereon;

a sealing subsystem for providing a fluid seal between the closing bolster and the linear wound;

a reduced-pressure subsystem for delivering a reduced pressure to the sealing subsystem and the closing bolster;

wherein the closing bolster is motivated between the extended position and the compressed position when a reduced pressure applied thereto for transmitting a closing force to the linear wound in the first direction; and

wherein the plurality of reinforcing members are non-compressible in the first direction.

13. A reduced-pressure, linear wound treatment system comprising:

a closing bolster for placing over the linear wound and operable to move between an extended position and a compressed position, the closing bolster comprising a plurality of manifold members compressible in a first direction perpendicular to the linear wound when positioned thereon and a plurality of reinforcing members coupled between the manifold members non-compressive in a second direction parallel to the linear wound when positioned thereon;

a sealing subsystem for providing a fluid seal between the closing bolster and the linear wound;

a reduced-pressure subsystem for delivering a reduced pressure to the sealing subsystem and the closing bolster;

wherein the closing bolster is motivated between the extended position and the compressed position when a reduced pressure applied thereto for transmitting a closing force to the linear wound in the first direction; and

wherein the closing bolster further comprises a first gripping member coupled thereto for transmitting the closing force from the closing bolster to a first edge of the linear wound and a second gripping member coupled there are two for transmitting the closing force from the closing bolster to a second edge of the linear wound.

14. The system of claim **13** wherein the first gripping member and the second gripping member each comprise an adhesive strip.

* * * * *