April 11, 1961 W. SHOCKLEY ET AL 2,979,386

CRYSTAL GROWING APPARATUS

Filed Aug. 2, 1956 6 Sheets-Sheet 1

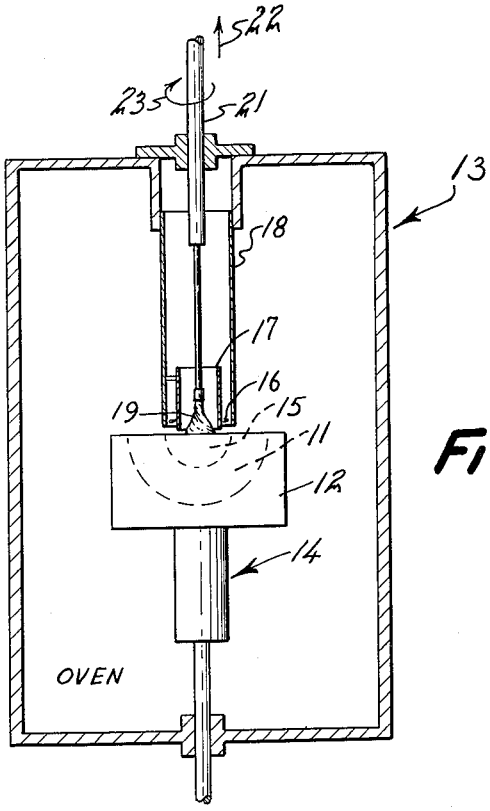

FIG. 1

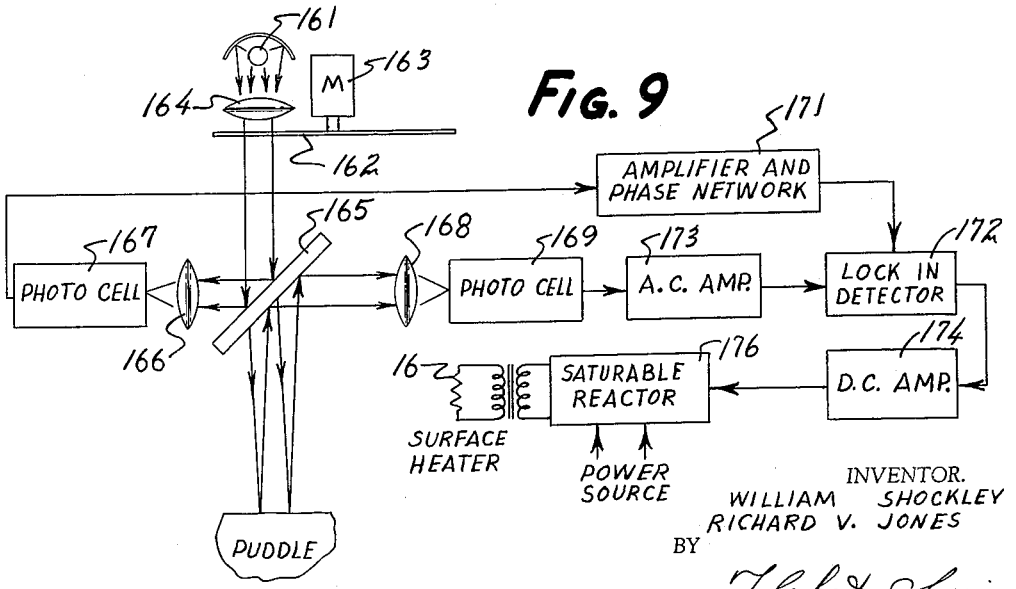

FIG. 9

INVENTOR.
WILLIAM SHOCKLEY
RICHARD V. JONES
BY
Flehr & Swain
ATTORNEYS

CRYSTAL GROWING APPARATUS

Filed Aug. 2, 1956 6 Sheets-Sheet 2

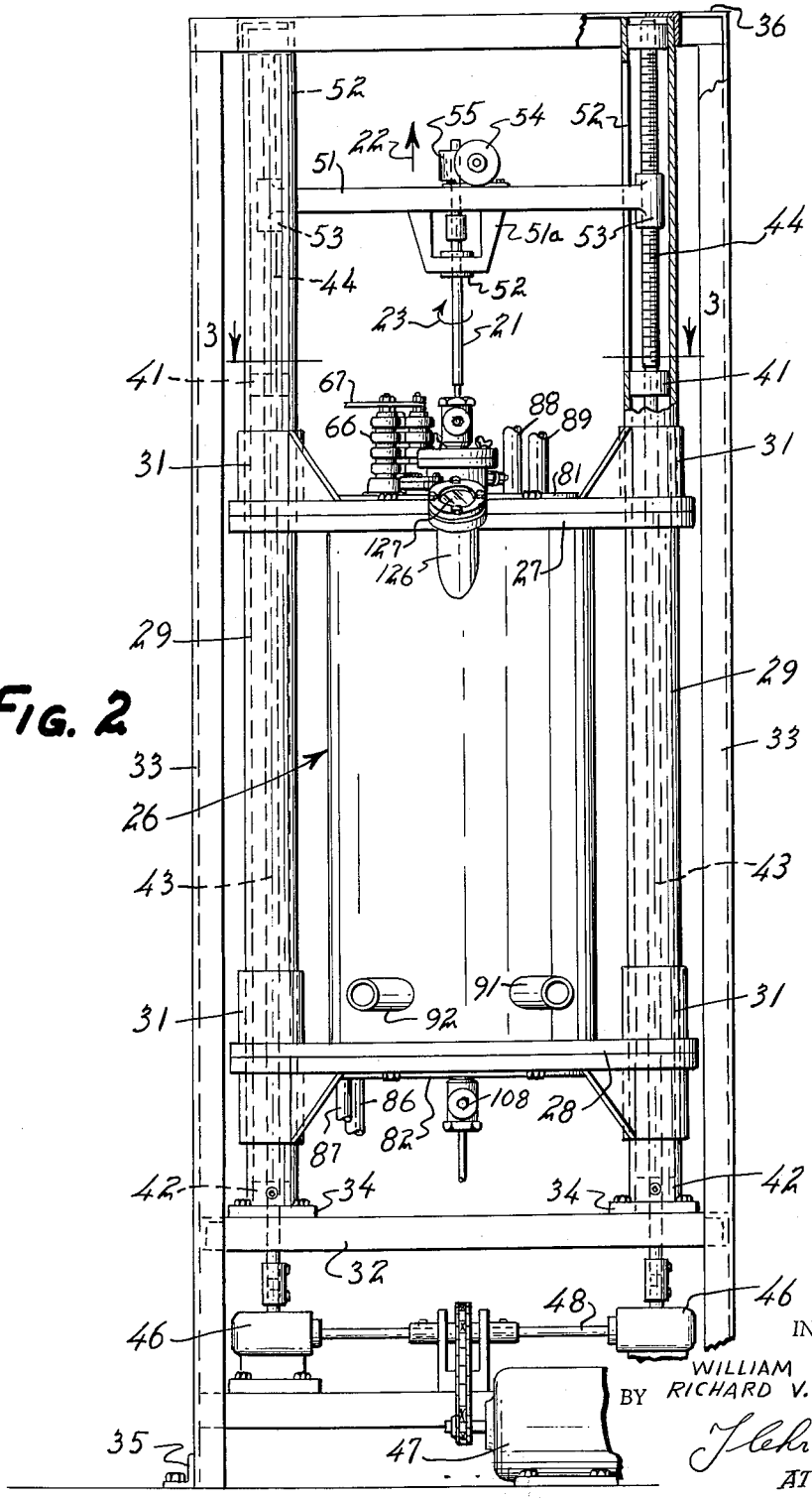

FIG. 2

INVENTOR.
WILLIAM SHOCKLEY
BY RICHARD V. JONES

Fleehr & Swain
ATTORNEYS

CRYSTAL GROWING APPARATUS

Filed Aug. 2, 1956 6 Sheets-Sheet 3

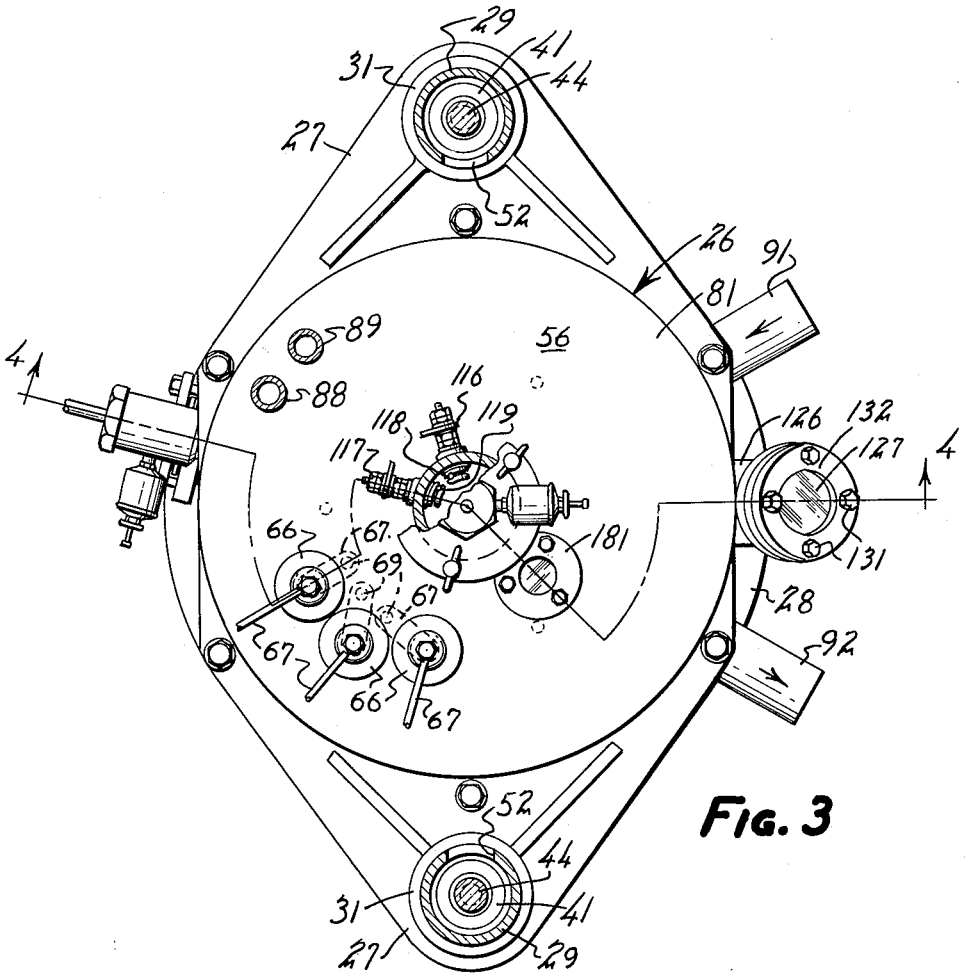

FIG. 3

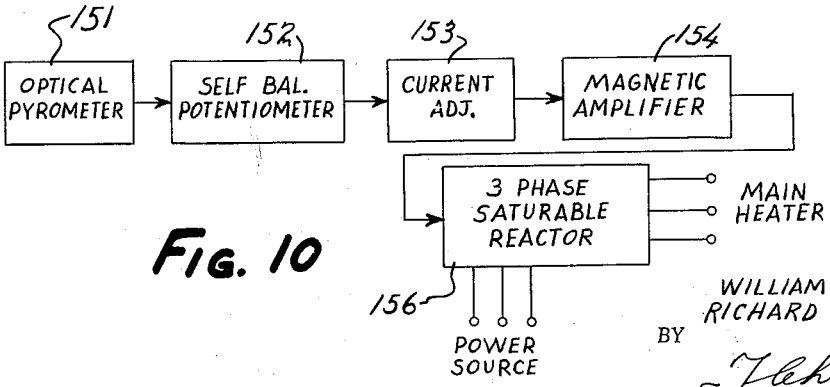

FIG. 10

INVENTOR.
WILLIAM SHOCKLEY
RICHARD V. JONES
BY
Flehr & Swain
ATTORNEYS

CRYSTAL GROWING APPARATUS

Filed Aug. 2, 1956 6 Sheets-Sheet 4

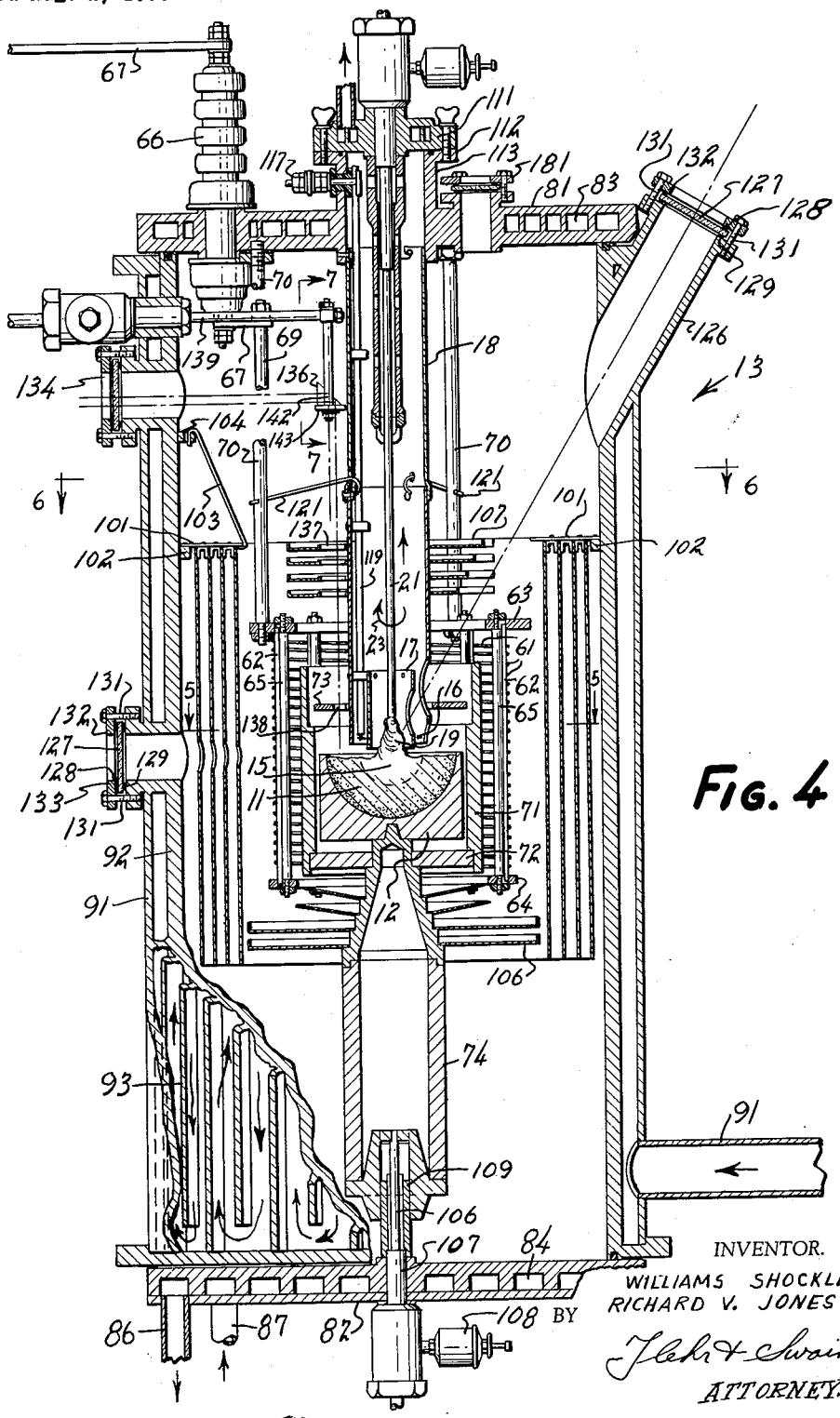

FIG. 4

INVENTOR.
WILLIAMS SHOCKLEY
RICHARD V. JONES
BY
Flehr & Swain
ATTORNEYS

CRYSTAL GROWING APPARATUS

Filed Aug. 2, 1956 6 Sheets-Sheet 5

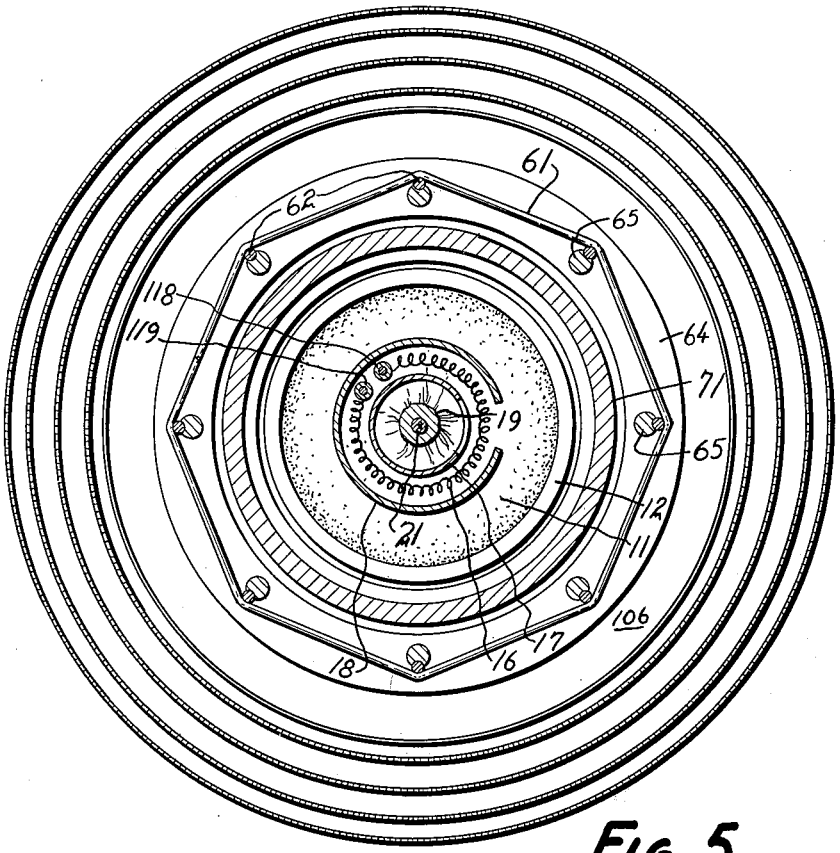

FIG. 5

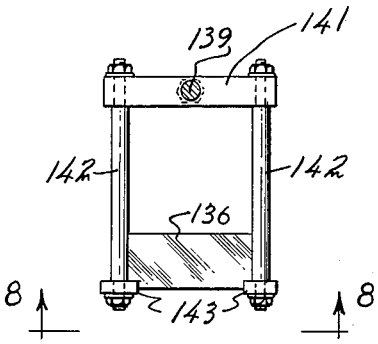

FIG. 7

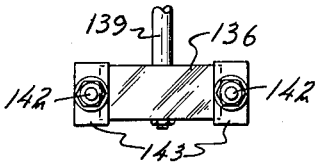

FIG. 8

INVENTOR.
WILLIAM SHOCKLEY
RICHARD V. JONES
BY
Flehr & Swain
ATTORNEYS

CRYSTAL GROWING APPARATUS

Filed Aug. 2, 1956 6 Sheets-Sheet 6

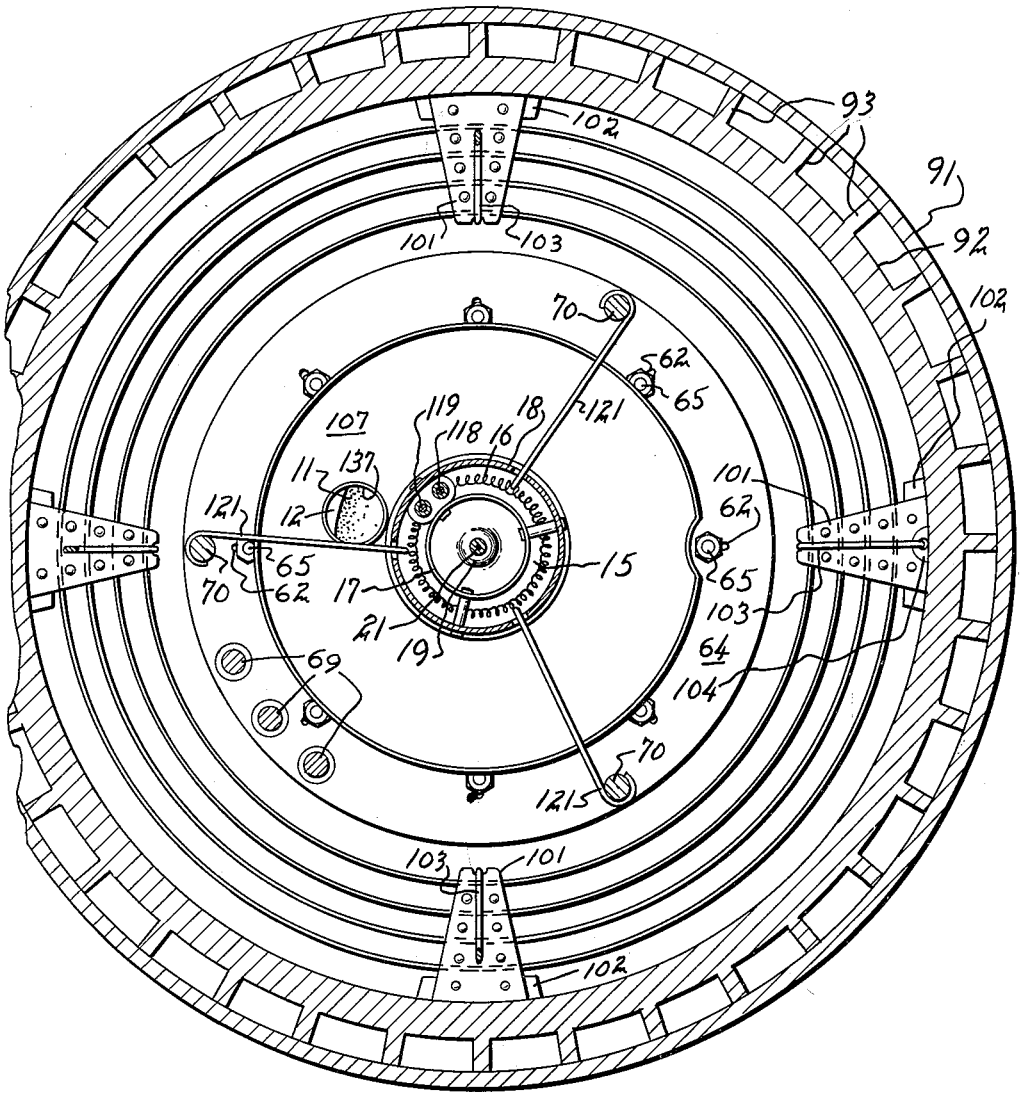

FIG. 6

INVENTOR.
WILLIAM SHOCKLEY
RICHARD V. JONES
BY
Flehr & Swain
ATTORNEYS

United States Patent Office

2,979,386

Patented Apr. 11, 1961

1

2,979,386

CRYSTAL GROWING APPARATUS

William Shockley, 23466 Corta Via, Los Altos, Calif., and Richard V. Jones, Palo Alto, Calif., assignors, by mesne assignments, to William Shockley, Los Altos, Calif.

Filed Aug. 2, 1956, Ser. No. 601,815

6 Claims. (Cl. 23—273)

This invention relates generally to a crystal growing method and apparatus and more particularly to a crystal growing method and apparatus suitable for growing single crystals of material, such as silicon, having relatively high melting points.

The production of single crystals from material such as germanium and silicon plays an important role in the semiconductor technology. In the prior art, germanium crystals have been purified by the so-called "zone refining" technique. As is well known, in this technique the germanium material which has ben prepared by other methods is held in a horizontal position in a quartz or graphite "boat" and molten zones are passed through the material. Crystals having impurity concentrations of 10^{12} donor or acceptor atoms per cubic centimeter and minority carrier lifetimes in the millisecond range have been obtained from such crystals. Crystals of comparable purity have also been made from zone-refined germanium or other germanium by melting in high purity graphite crucibles heated by radio frequency induction coils or by resistance heating and drawing crystals from these melts. This method also results in purifications since the first material to be withdrawn from the melt is generally purer than the melt for most impurities.

Modification of the same techniques to form crystals from materials having relatively high melting points, for example silicon, have certain shortcomings. Crucible materials having adequate mechanical strength and which are not reactive at the higher temperatures are generally not available. For example, the growth of a silicon crystal in a quartz crucible introduces into the final crystal impurities which fall into two general classes. The first class includes all the possible impurities which may be found in quartz, the most serious impurity being boron which is extremely difficult to remove from quartz. It has been found that each regrowth of a silicon crystal from a melt adds 2 to 3×10^{13} atom/cm.^{3} of boron impurity. This type of impurity can have serious effects on the resistivity, conductivity type, and minority carrier lifetime of the final crystal. The second class of impurities consists of high concentrations of oxygen—approximately 10^{18} atoms/cm.^{3}—in the grown crystal. The oxygen is a result of the equilibrium reaction between the molten silicon and the quartz crucible. The effects of the oxygen impurities on semiconductor properties are at the present time not well understood.

The grown crystals cannot be refined by conventional zone refining methods due to the lack of suitable crucibles. For example, if a quartz crucible supported by a graphite container is used, the difficulty of contamination by oxygen and other impurities is not eliminated.

Another difficulty in the production of pure silicon crystals is that of "thermal conversion." Semiconducting crystals grown under certain conditions tend to exhibit a strong decrease in the minority carrier lifetime after further heat treatment. The increased likelihood of this "thermal conversion" seems to be associated with the

2

mechanical deformation or thermal strains introduced in the growing process. Such effects have been eliminated from germanium crystals by purifying the material from which the crystals are grown, eliminating thermal strains which produce dislocations, and avoiding contamination of the crystal during such thermal treatment. It is evident that the difficulty of avoiding thermal strains will be greater for silicon than for germanium in conventional crystal growing apparatus because of the higher melting point of silicon.

Recently, in the crystal growing art, a so-called "floating zone" technique has been developed to purify the silicon and other crystals having high melting points. In this technique, zone heating is applied to a vertical ingot. The molten zone is maintained by the surface tension of the liquid phase. The crystal thus produced is limited to a relatively small size by the severe control problems that would be encountered in trying to have a molten region whose diameter was large compared to its length. The growth of relatively thin or small crystals is inefficient from the point of view of quantity production of semiconductive devices. Furthermore, in this method the large thermal gradients are still present and the crystal is subject to thermal conversion.

It is a general object of the present invention to provide an improved crystal growing method and apparatus.

It is another object of the present invention to provide a crystal growing method and apparatus which is suitable for growing crystals from materials having high melting points.

It is another object of the present invention to provide a crystal growing method and apparatus in which the crystal is pulled from a melt of material which is contained in a mass of the same material.

It is another object of the present invention to provide a crystal growing method and apparatus in which a mass of the material is maintained at a temperature slightly below its melting point and a surface heater serves to heat a predetermined small area of the upper surface of the same to form a molten puddle of the material within the mass of material from which the crystal is grown.

It is another object of the present invention to provide a crystal growing apparatus and method in which the crystal being pulled from the molten mass of material is not subjected to large thermal gradients.

It is a further object of the present invention to provide an improved crystal growing furnace together with suitable temperature controls therefor.

The invention possesses other objects and features of advantage, some of which, with the foregoing, will be set forth in the following description of the invention. It is to be understood, of course, that the invention is not to be limited to the particular disclosure as other variant embodiments thereof may be adopted within the spirit and scope of the appended claims.

Referring to the drawing:

Figure 1 schematically illustrates the crystal growing apparatus of our invention;

Figure 2 is an elevational view of crystal growing apparatus constructed in accordance with our invention;

Figure 3 is a plan view partly in section taken along the line 3—3 of Figure 2;

Figure 4 is a sectional elevational view taken generally along the line 4—4 of Figure 3;

Figure 5 is a sectional view taken generally along the line 5—5 of Figure 4;

Figure 6 is a sectional view taken generally along the line 6—6 of Figure 4;

Figure 7 is a view taken generally along the line 7—7 of Figure 4 and showing the prism mount;

Figure 8 is a bottom view taken along the line 8—8 of Figure 7;

Figure 9 is a block diagram of the electro-optical system which serves to control power applied to the surface heater; and

Figure 10 is a block diagram of the electro-optical system which serves to control the power supplied to the main heater.

Generally, a crystal is pulled from a molten puddle contained in a mass of the same material. The mass of material is held in an oven at a temperature which is slightly below its melting point. A surface heater serves to heat a restricted area of the upper surface of the mass to form a puddle of molten material. Means are provided for withdrawing a crystal from the molten mass. The crystal is withdrawn within the oven whereby the thermal gradients set up in the solid-liquid interface are reduced to a minimum to thereby reduce the possibility of thermal conversion previously described.

Referring to Figure 1, a crystal growing apparatus is schematically illustrated. A mass 11 of the material is disposed within a quartz lined graphite crucible 12 within the oven designated generally by the reference numeral 13. Suitable means 14 are provided for supporting the crucible within the oven. The oven is maintained at a temperature slightly below the melting point of the mass 11 whereby it remains in its solid state.

Additional power to form a zone or puddle of molten material 15 is supplied by a surface heater 16 which is inserted into the oven adjacent to the upper surface of the material. The surface heater is preferably annular and is shielded by the concentric shields 17 and 18. Means are provided for inserting a crystal seed into the oven. The seed is dipped into the molten puddle and withdrawn therefrom to grow a crystal 19. The inner shield 17 serves to shield the crystal from the annular heater 16. The shaft 21 serves to support the crystal and to provide means for drawing the same upwardly as indicated by the arrow 22. In some instances, it is desirable to impart a rotational velocity to the shaft as indicated by the arrow 23.

As the crystal 19 is withdrawn from the puddle, it is subjected to the oven temperature which is slightly below its melting point. The temperature gradient across the solid-liquid interface is small.

As the crystal is withdrawn, the level of the puddle 15 will be lowered. If the power to the surface heater remains constant, the size of the pool or puddle will decrease. This gives rise to a change in concentration of the doping material. To overcome this, the supporting member 14 may be raised to maintain the upper surface of the puddle 14 at a constant elevation, means may be provided for introducing material into the puddle as the crystal is withdrawn, or the power to the surface heater may be increased.

Referring to Figure 2, the crystal growing furnace 26 is supported between the supporting plates 27 and 28 which are supported by the hollow columns 29. The plates are connected to the sleeves 31 which are adapted to slide onto the columns 29 and which are provided with suitable means (not shown) for locking the same thereto. For example, such means may comprise lock nuts threaded to the sleeves 31 and adapted to engage the columns 29. The columns are supported by the platform 32 suitably attached to the structure 33 which may be formed of angle iron as shown. The base plates 34 are suitably secured to the platform 32 and receive the hollow columns. The base of the structure is provided with angles 35 which provide means for mounting the furnace.

The upper ends of the columns are suitably secured to the structure 33. Disposed within the hollow columns and supported between the bearings 41 and 42 are drive rods 43. The upper ends of each of the rods 43 are suitably connected to a lead screw 44. The lower portion is suitably coupled to the drives 46. A variable speed motor 47 serves to drive the drive shaft 48. The drives 46 may, for example, include a worm drive which serves to rotate the drive shaft 43. A cross member 51 extends through the slots 52 formed at the upper end of the columns 29 secured to the members 53 which are driven by the lead screw. As the lead screw is rotated, the member 51 is raised and lowered, depending upon the direction of rotation. Thus it is seen that by operating the motor 47 at a predetermined speed, the member 51 is moved at a predetermined rate. The rod 21 which is adapted to hold and withdraw the crystal, as previously described, passes through the bearing 52 which is held by the bracket 53 suitably secured to the member 51. As the platform is raised, the rod 21 is lifted to withdraw a crystal. A motor 54 may be provided which is provided with a worm drive 55 to rotate the rod 21 if so desired.

In Figures 3–8, the furnace is shown in greater detail. The constant temperature region or "oven zone" required to hold the mass of material just below its melting point can be obtained most conveniently by Joule heating. The oven zone is heated by employing windings 61 made of molybdenum or other suitable material capable of withstanding the temperatures encountered, which are wound onto a "bird cage." As shown, the wire is wound in an octagonal shape on a insulating support. The support comprises eight notched sapphire rods 62 (Figures 5 and 6). These rods are held vertically in the bird cage. The support is fabricated with upper and lower rings 63 and 64, of molybdenum or other suitable material capable of withstanding the temperatures encountered, which are separated by suitable rods 65. The rods 65 which support the upper and lower rings act as backings to prevent inward flexing of the sapphire rods 62 under the pressure of the windings 61. By employing wire of suitable diameter, the coil may be wound to give a resistance which is compatible with the current capacities available and with existing power supplies. The coil may be conveniently wound in three windings so that the furnace may be powered from a three phase source for balanced operation. It is, of course, apparent that with this type of windings, in the event that there is any burn-out, the coils may be simply re-wound.

The complete "bird cage" and winding is supported from the top of the furnace by rods 70. Power is led into the furnace through the insulated lead-ins 66 disposed at the top of the furnace (Figures 3 and 4). Links 67 serve to connect the conductors 68 with the vertical rods 69 which extend downwardly and are connected to the windings. Preferably, the winding 61 is attached to the vertical rods 69 by "solderless" wrap-around connections. However, the connection may be made by other suitable means capable of withstanding the high temperatures encountered in the oven.

The oven region itself is defined by a cylinder 71 which is preferably made of graphite and which is heated by direct radiation from the heating elements or winding 61. A base 72, preferably made of graphite, serves to support the cylinder within the furnace. A cover 73 made of suitable material, for example molybdenum, is held by the outer shield 18. The cylinder, base and cover tend to act as "thermal lag" smoothing out both spatial and time variations to give a relatively constant temperature inside of the oven zone. The base 72 is engaged by the pedestal 74 which serves to hold the same within the oven. The pedestal is preferably in the form of a hollow graphite column to reduce the heat conduction through the same to the walls of the furnace.

The pedestal 74 also serves to support a crucible assembly 12 which is provided with a quartz liner (not shown) and in which the material 11 is disposed. To average out any thermal asymmetries in the furnace and in the oven region, suitable means may be provided for

rotating the pedestal 74 whereby the complete assembly is rotated within the bird cage assembly.

The furnace includes a water-cooled housing, which comprises the upper and lower water-cooled plates 81 and 82. The plates are formed in two sections with channels 83 and 84 respectively, through which cooling water may be circulated. Suitable connections 86 and 87 on the base plate and 88 and 89 on the top plate are provided for supplying water thereto. The cylindrical wall is formed with two spaced cylinders 91 and 27 with baffle 93 disposed in the space between the same. Alternate ones of said baffles extend to the top and the others extend to the bottom, whereby the water flowing into the jacket through the connection 91 zigzags upwardly and downwardly until it is discharged from the discharge connection 92 (Figure 3).

To prevent axial and radial heat losses from the main heater to the water-cooled walls of the furnace, suitable radiation shields are provided. The radial losses are minimized by employing concentric spaced cylinders made of suitable material, for example, molybdenum, which surround the heater and are suitably supported by the water-cooled walls. For example, the cylinders may have their upper portion attached to sectors 101. The sectors have their outer margin riding on the shoulder 102 which is suitably secured to the inner wall of the water-cooled jacket. The innermost portion of the sector may be supported by wires 103 which are suitably attached to lugs 104 secured to the water-cooled jacket. Axial radiation losses downward are reduced by the use of disc or dish-like shields 106 which are supported by the pedestal 74. Upward axial losses are minimized by the use of the disc or dish-like shields 107 which are supported by the outer shield 18.

In order to maintain the purity of the material from which the crystal is being formed, to avoid oxidization of the assemblies contained within the furnace and to decrease heat losses due to convection currents, the furnace is preferably evacuated. Thus the furnace should be relatively vacuum tight. The vacuum connection through the lower furnace wall to the pedestal 74 permits rotation and vertical movement thereof. The seal is of a well-known type which includes a shaft 106 which rides within a sleeve 107. A lubricant is forced between the shaft and sleeve by means of the device 108 to form the seal. Since this sliding seal is formed on the water-cooled jacket, the effect of heat upon the lubricant is minimized. The upper end of the shaft 106 engages the pedestal. The lower portion of the pedestal is guided by the sleeve 109. A similar seal arrangement is adapted to accommodate the shaft 21 which serves to hold the crystal seed and to withdraw the crystal from the molten pool or puddle.

The upper seal is supported by the water-cooled jacket 111 which is removably secured to the flange 112 of the cylinder 113. The lower end of the cylinder 113 is suitably attached, as for example by welding, to the top plate 81. Lead-in insulators 116 and 117 are associated with the cylinder 113 and provide means for making electrical connection to the vertical leads 118 and 119 which extend downwardly to make contact with the annular heating element 16. As previously described, the annular heating element is disposed between the outer cylinder 18 and the inner cylinder 17 whereby the crystal is shielded from the heater as it is withdrawn from the molten puddle. The outer shield 18 is suitably attached to the cylinder 113 and supported thereby. To prevent any movement due to vibration, etc., the intermediate portion of the shield 18 is secured to the wires 121 which have their free end attached to the bird cage supports 70.

As previously described, the solid material 11 has a molten puddle 15 formed therein by the radiation from the annular surface heater. In order to observe the molten area, suitable openings are formed in the inner shield 17, outer shield 18 and in the upper dish-shaped shields 107. A viewing tube 126 is suitably attached to the walls of the furnace and provided with a window 127. A vacuum seal is formed by the use of the O-rings 128 and 129 which seal the window when the bolts 131 are tightened to cause the rings 132 to exert pressure thereon. Viewing ports 133 and 134 are provided on the sides. Other ports may be formed as desired. As will be presently described, the viewing port 133 is adapted to be used in conjunction with an optical pyrometer for controlling the temperature of the "bird cage" heater. The opening 134 provides means for viewing the material and the molten puddle.

The prism 136 permits viewing the puddle through the openings 137 formed in the dishes 107 and through the opening 138 formed in the dish 73. The prism 136 is supported by the shaft 139 which holds the cross member 141 to which are attached the vertical supporting posts 142. The lower end of the posts 142 have a suitable seat 143 applied thereto which serves to hold the prism. The rod 139 is brought through the vacuum seal whereby the prism 136 may be moved to properly position the same. Alternatively the prism may be replaced by a mirror which should preferably be a "front surface mirror." The advantage of this type of viewing device is that the slight evaporation of silicon will simply alter the reflection coefficient of the surface somewhat rather than acting as an obscuring mass through which light must pass.

In order to keep the temperature of the oven region substantially constant and at a temperature which is near the melting point of the material from which the crystal is withdrawn, suitable electronic controls are employed. The temperature of the oven is established and maintained by viewing the heater windings 61 or the surrounding surfaces through the window 133 with an optical pyrometer which has its output connected to the electronic control system.

Referring to Figure 10, the optical pyrometer 151 which develops a thermal E.M.F. is connected to a self-balancing potentiometer 152 which may record or provide a visual indication of the output of the pyrometer. The current adjuster serves to generate a current which is related to the potentiometer balance position. The current is applied to the magnetic amplifier 154 and amplified thereby. The output of the magnetic amplifier is applied to windings formed on the core of a three phase saturable reactor 156. As is well-known, by varying the current on the control winding, the saturable reactor may be employed to control power. Thus, an opto-electrical system is provided which serves to control the large power requirement of the oven heater in response to changes in the radiant energy from the oven region.

In principle, if the power output of the oven and surface heaters were held constant, the temperature of the molten pool would remain fixed. However, in practice this constancy is difficult to achieve. Actually, the temperature of the molten pool tends to be stabilized since any tendency for changes in temperatures results in a change of size of the pool. A fluctuation in the size of the pool leads to fluctuations in doping concentration, as previously described. A system serving to control the power applied to the surface heater is desirable to maintain the size of the pool.

The surface of the material changes from a rough to a smooth surface as it becomes molten. This tends to increase the reflectivity of the surface. By reflecting light from a given point on the surface of the material, it is possible to tell whether or not that point is solid or liquid by the change in reflectivity and by this means to detect when the solid-liquid interface passes that point. The discontinuous change in reflected energy may be used to activate a light detector which is connected to a suitable electrical circuit which controls the power input to the surface heater.

Referring to Figure 9, the light from a mercury lamp **161** is chopped at a constant rate by means of a chopper **162** which is driven by a synchronous motor **163**. The chopped light is interrupted by a lens system **164** which serves to collimate the same. The collimated light strikes a half-silvered mirror. A portion of the light is reflected by the mirror to the lens **166** and focused on the comparison photocell **167**. Another portion of the light passes through the mirror **165** and is incident upon the point of the mass being monitored. The light reflected by the sample is reflected by the mirror **165** to the lens **168** which serves to focus the same on the photocell **169**.

The output of the photocell **167** is applied to an amplifier and phase controlling network **171** which serves to amplify and give the signal the proper phase. The signal is applied to the lock-in detector **172**. The A.-C. output from the photocell **169** is amplified by the amplifier **173** and also applied to the lock-in detector. The signal from the amplifier **171** serves to control the lock-in detector whereby the signal from the A.-C. amplifier **173** is detected and applied to the D.-C. amplifier **174**. The output of the D.-C. amplifier is applied to the windings of a saturable reactor **176** which serves to control the power from the power source which is applied to the surface heater **16** previously described. As the output of the amplifier **174** varies in response to variations in reflected energy from the material, the power supplied to the surface heater is controlled whereby the volume of the molten region remains substantially constant.

Operation of the apparatus, assuming that a silicon crystal is to be grown, is as follows: The quartz liner formed in the graphite crucible **12** is charged or filled with hyper-pure semiconductor grade silicon. The furnace is then sealed and the vacuum system is started and operated to apply a vacuum to the furnace. When the vacuum is in the order of 10^{-3} mm. of Hg, the power to the oven coil is turned on and the internal temperature of the oven brought up to approximately 1380° C. which is approximately 40° C. below the melting point of silicon.

The temperature within the oven zone is determined initially by the optical pyrometer or an additional thermocouple. If it is obtained by the optical pyrometer, the pyrometer must be calibrated in order that the temperature of the oven region can be obtained from the pyrometer output. For example, the pyrometer may be calibrated for these purposes by observing its reading while at the same time slowly raising the temperature to the point where silicon is observed to melt in the crucible. Alternatively, thermocouples may be inserted into the crucible chamber during a calibration run. Once the calibration has been established, the actual oven temperature may be readily determined from the pyrometer output.

The vacuum system is operated at this temperature for a sufficient length of time to outgas all metal and graphite parts within the furnace. The power to the surface heater is then turned on to produce a molten pool. The melt size is brought under control by means of the control system previously described. The pulling rod, which has attached to its tip a silicon seed, is oriented in either the 100 or 111 crystal direction and then lowered so that the seed dips into the molten pool. The crystal is then withdrawn at rates ranging from 0.18 to 0.054 inch per minute. If desired, the crystal may also be rotated at rates ranging from 0.5 to 120 r.p.m. as it is being withdrawn from the melt.

In order to maintain the proper doping concentration as the crystal is withdrawn, silicon is added to the melt or the oven-supporting pedestal raised so that the size of the melt remains constant as the crystal is being withdrawn. In this respect, additional ports, for example portions **181** (Figure 4), may be formed whereby a suitable mechanism may be inserted within the oven to add silicon. The silicon may be added in any suitable form. For example, as small pellets or a powder, or it may be added

continuously in the form of a small rod which is lowered into the melt at a rate which compensates for the withdrawal of the silicon crystal.

After the crystal has been grown to a length of about 10 centimeters and a diameter of approximately 3.5 centimeters, the power to the heaters is shut off. If it is desired to rapidly cool the furnace, this may be achieved by blowing an inert gas through the furnace. After the furnace has been sufficiently cooled, the completed crystal and pulling rod may be removed by removing the detachable cover **111** together with the associated vacuum seal.

It is, of course, apparent that rather than an annular electrical surface heater, other means may be employed to heat a predetermined region of the surface of the material. For example, an annular jet of hot inert gas (for example argon passed through an auxiliary furnace) could be projected down onto the surface of the material to create a suitable heat zone, or energy radiated by an annular tube of refractory material suspended from above the surface with a hot gas passing therethrough may be employed.

It is also apparent that rather than controlling the size of the melt by reflecting light from the solid-liquid interface, it is also possible to employ the secondary emission properties at the interface. A discontinuous change in the secondary emission produced by an electron gun "fired" at the surface could be used in a similar manner to control the surface heater. The resistivity of solid silicon is higher than that of the molten pool and the resistivity measured across the pool would indicate a change in volume. Mechanical probes might be employed and inserted through suitable vacuum seals to indicate the solid-liquid interface.

It is seen that the crystal growing method and apparatus described has the advantage that the temperature gradients are kept to a minimum throughout the region in which the crystal is growing. Thus thermal stresses in the crystal will be minimized and resulting imperfections from the corresponding plastic deformation will be eliminated. These effects will improve the lifetime of minority carriers in the material and make it less susceptible to alteration of properties during subsequent thermal treatment. Further, the melt is held within a mass of the same material whereby the amount of impurities introduced into the grown crystal are negligible. A crystal grown by this method from suitably pure starting material will be further purified by the crystal growing process since most impurities are more soluble in the melt than in the crystal. Such improved material will improve the uniformity of manufacturing processes and permit the fabrication of devices having superior properties.

We claim:

1. A crystal growing apparatus for growing a crystal from a mass of the same material comprising means adapted to maintain the temperature of the mass near its melting point, means effecting a heat exchange to an upper localized region of the mass whereby the region is raised above the melting point of the material to form a pool of the material which is contained by the mass, and means for viewing the upper surfaces of said material and serving to control the heat exchange to the upper surface whereby the volume of the region pool is controlled.

2. A crystal growing apparatus for the growing of crystals from a mass of the same material comprising means adapted to maintain the temperature of the mass near its melting point, means effecting a heat exchange to an upper localized region of said mass whereby the temperature of the mass is raised above its melting point to form a pool which is contained by the mass, means for viewing the upper surface of the mass and serving to control the heat exchange thereto whereby the volume of the pool is controlled, and means for drawing a crystal from said pool.

3. A crystal growing apparatus for the growing of a crystal from a mass of the same material comprising means adapted to maintain the temperature of the mass near its melting point, annular surface heating means adapted to heat an upper localized region of said mass to raise its temperature above the melting point of the material whereby a pool of molten material is formed and contained by the mass, means for drawing a crystal from said pool, a shield serving to surround the grown crystal to shield the same from the annular heating means, and means for detecting the size of the molten pool and control the heating means to thereby control the size of the pool.

4. A crystal growing apparatus for the growing of a crystal from a mass of the same material comprising an oven adapted to maintain the temperature of the mass near its melting point, an annular heater adapted to heat a localized upper region of the material to raise the temperature of the same above the melting point of the material to form a pool of molten material which is contained by the mass, means for drawing a crystal upward from said pool into the oven whereby temperature gradients in the solid-liquid interface are minimized, means for shielding the grown crystal from the annular heating means, and means for detecting the size of the molten pool and control the heating means to thereby control the size of the pool.

5. A crystal growing apparatus for the growing of crystals from a mass of the same material comprising means adapted to maintain the temperature of the mass near its melting point, means effecting a heat exchange to an upper localized region of said mass whereby the temperature of the mass is raised above its melting point

to form a pool which is contained by the mass, means for detecting the size of the molten pool and serving to control the heat exchange thereto whereby the volume of the pool is controlled, and means for drawing a crystal from said pool.

6. A crystal growing apparatus for the growing of crystals from a mass of the same material comprising means for effecting a heat exchange to an upper localized region of said mass whereby the temperature of said region is raised above its melting point to form a pool which is contained by the mass, means for detecting the size of the pool and serving to control the heat exchange thereto whereby the volume of the pool is controlled, and means for drawing a crystal from said pool.

References Cited in the file of this patent

UNITED STATES PATENTS

2,436,262	Miller	Feb. 17, 1948
2,686,212	Horn et al.	Aug. 10, 1954
2,686,864	Wroughton	Aug. 17, 1954
2,702,494	Lieneweg	Feb. 22, 1955
2,739,088	Pfann	Mar. 20, 1956
2,747,971	Hein	May 29, 1956
2,753,280	Moore	July 3, 1656
2,768,914	Buehler et al.	Oct. 30, 1956
2,789,039	Jensen	Apr. 16, 1957
2,809,136	Mortimer	Oct. 8, 1957
2,858,199	Larson	Oct. 28, 1958

FOREIGN PATENTS

636,199	Germany	Oct. 14, 1936
2,011,180	Australia	Feb. 27, 1956
1,119,039	France	Mar. 26, 1956