US009467484B2

(12) **United States Patent**
Umehara

(10) **Patent No.: US 9,467,484 B2**
(45) **Date of Patent: Oct. 11, 2016**

(54) **TRANSMISSION MANAGEMENT SYSTEM, TRANSMISSION SYSTEM, AND TRANSMISSION MANAGEMENT SYSTEM PROGRAM**

(71) Applicant: **Naoki Umehara**, Kanagawa (JP)

(72) Inventor: **Naoki Umehara**, Kanagawa (JP)

(73) Assignee: **RICOH COMPANY, LIMITED**, Tokyo (JP)

(*) Notice: Subject to any disclaimer, the term of this patent is extended or adjusted under 35 U.S.C. 154(b) by 44 days.

(21) Appl. No.: **14/396,596**

(22) PCT Filed: **May 20, 2013**

(86) PCT No.: **PCT/JP2013/064550**

§ 371 (c)(1),
(2) Date: **Oct. 23, 2014**

(87) PCT Pub. No.: **WO2013/172485**

PCT Pub. Date: **Nov. 21, 2013**

(65) **Prior Publication Data**

US 2015/0138306 A1 May 21, 2015

(30) **Foreign Application Priority Data**

May 18, 2012 (JP) 2012-114602

(51) **Int. Cl.**
H04N 7/15 (2006.01)
H04L 29/06 (2006.01)
(Continued)

(52) **U.S. Cl.**
CPC ***H04L 65/1066*** (2013.01); ***H04L 12/1822*** (2013.01); ***H04L 41/28*** (2013.01);
(Continued)

(58) **Field of Classification Search**
CPC H04N 7/15; H04N 7/152; H04N 7/14; H04L 65/1066; H04L 65/403; H04L 12/1822
USPC 348/14.01–14.16; 709/204–205
See application file for complete search history.

(56) **References Cited**

U.S. PATENT DOCUMENTS

2004/0024909 A1 2/2004 Yumoto et al.
2007/0091169 A1 4/2007 Zhang et al.
(Continued)

FOREIGN PATENT DOCUMENTS

JP 10-042038 2/1998
JP 2001-345833 12/2001
(Continued)

OTHER PUBLICATIONS

Masugi Inoue et al., "Terminal Mobility Control by Information Synchronization Among Distributed Base Stations in NerveNet", IEICE Technical Report, May 13, 2010, vol. 110, No. 40, p. 127-132, p. 130[3] (with English Abstract).
(Continued)

Primary Examiner — Melur Ramakrishnaiah
(74) *Attorney, Agent, or Firm* — Oblon, McClelland, Maier & Neustadt, L.L.P.

(57) **ABSTRACT**

A management system receives, when a state of a terminal is changed based on control by another management system, state information after change that indicates the state after the change from the another management system. Consequently, there is an effect that, even if control associated with communication is executed by the another management system, the management system can control the state of the terminal based on the received state information after change.

9 Claims, 20 Drawing Sheets

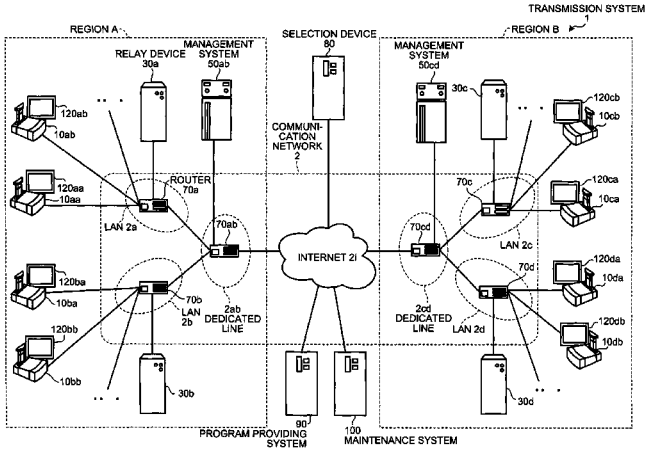

(51) **Int. Cl.**

H04M 3/42	(2006.01)
H04M 7/00	(2006.01)
H04L 12/24	(2006.01)
H04L 12/18	(2006.01)

(52) **U.S. Cl.**
CPC ***H04L 65/403*** (2013.01); ***H04M 3/42365*** (2013.01); ***H04M 7/006*** (2013.01); ***H04N 7/15*** (2013.01); ***H04N 7/152*** (2013.01)

(56) **References Cited**

U.S. PATENT DOCUMENTS

2010/0241700	A1	9/2010	Rasmussen et al.
2011/0216699	A1	9/2011	Umehara et al.
2012/0221702	A1	8/2012	Umehara et al.
2012/0314019	A1	12/2012	Asai
2013/0117373	A1	5/2013	Umehara
2014/0129641	A1	5/2014	Umehara

FOREIGN PATENT DOCUMENTS

JP	2004-005092		1/2004
JP	2008-225619		9/2008
JP	2011-199845		10/2011
JP	2012-050063		3/2012
WO	WO 01/71512	A1	9/2001
WO	WO 0171512	A1 *	9/2001
WO	WO 2012/014824	A1	2/2012

OTHER PUBLICATIONS

International Search Report issued Aug. 6, 2013 in PCT/JP2013/064550 Filed May 20, 2013.
U.S. Appl. No. 14/397,681, filed Oct. 29, 2014, Umehara.
U.S. Appl. No. 14/397,681, filed Oct. 29, 2014.
Extended European Search Report issued May 15, 2015 in Patent Application No. 13791551.8.

* cited by examiner

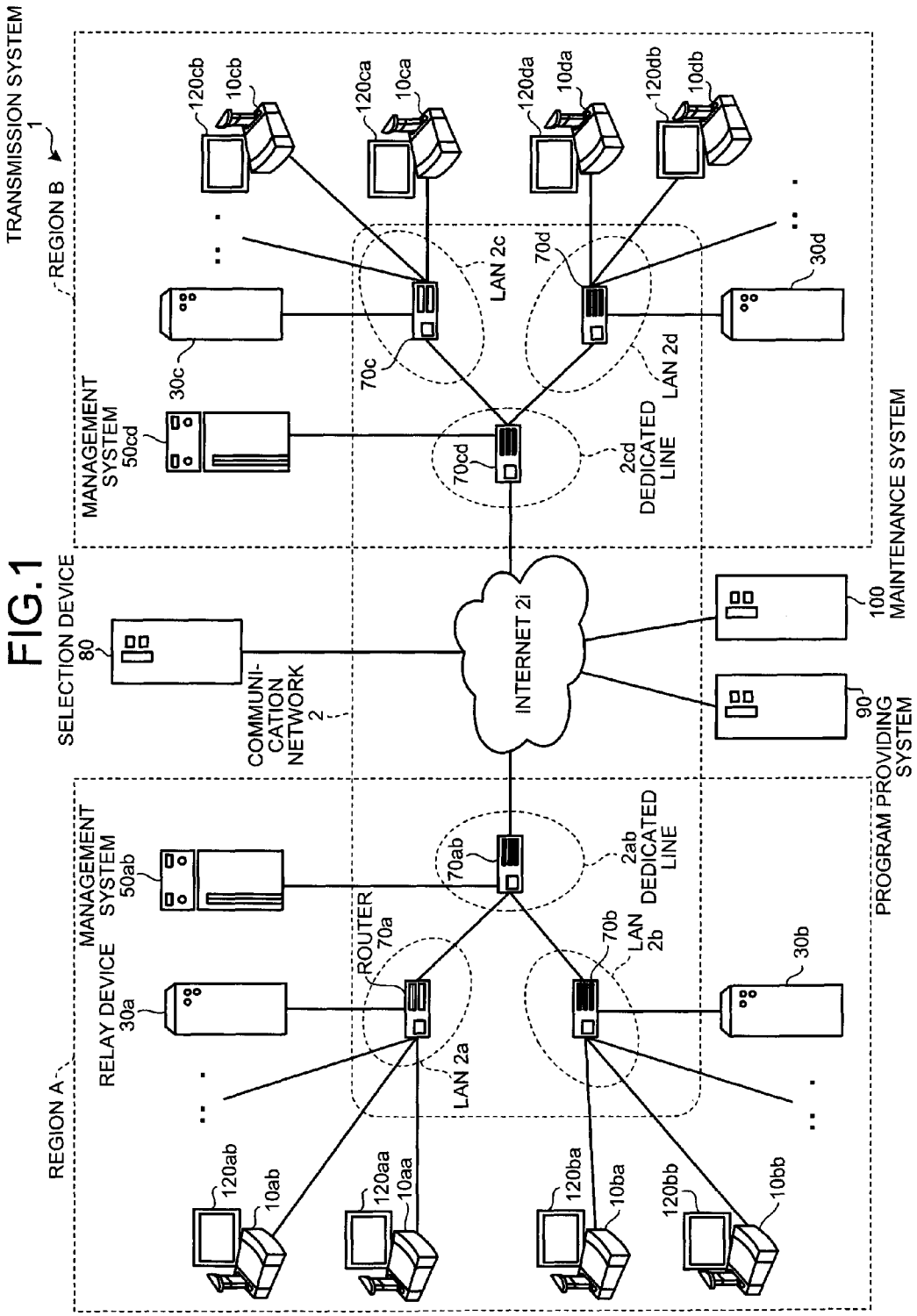
TRANSMISSION SYSTEM
1
REGION B
120cb
10cb
120ca
10ca
120da
10da
120db
10db
LAN 2c
70d
30d
30c
70c
LAN 2d
MANAGEMENT SYSTEM 50cd
70cd
2cd DEDICATED LINE
SELECTION DEVICE 80
COMMUNI-CATION NETWORK 2
INTERNET 2i
100 MAINTENANCE SYSTEM
90 PROGRAM PROVIDING SYSTEM
MANAGEMENT SYSTEM 50ab
70ab
2ab DEDICATED LINE
ROUTER 70a
70b
LAN 2b
RELAY DEVICE 30a
30b
LAN 2a
REGION A
120ab
10ab
120aa
10aa
120ba
10ba
120bb
10bb

FIG.1

FIG.2

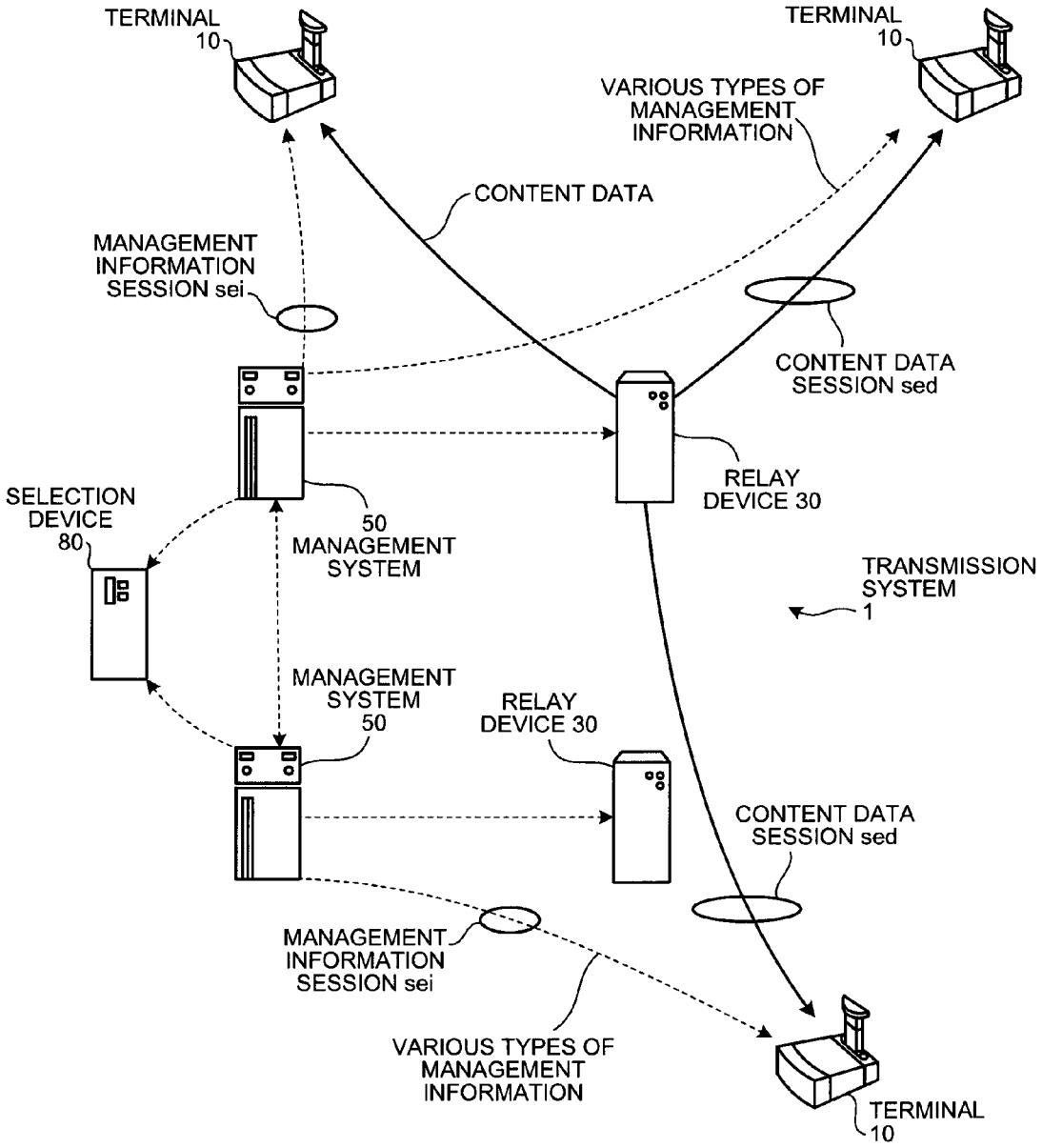
TERMINAL
10
TERMINAL
10
VARIOUS TYPES OF
MANAGEMENT
INFORMATION
CONTENT DATA
MANAGEMENT
INFORMATION
SESSION sei
CONTENT DATA
SESSION sed
RELAY
DEVICE 30
SELECTION
DEVICE
80
50
MANAGEMENT
SYSTEM
TRANSMISSION
SYSTEM
1
MANAGEMENT
SYSTEM
50
RELAY
DEVICE 30
CONTENT DATA
SESSION sed
MANAGEMENT
INFORMATION
SESSION sei
VARIOUS TYPES OF
MANAGEMENT
INFORMATION
TERMINAL
10

FIG.3

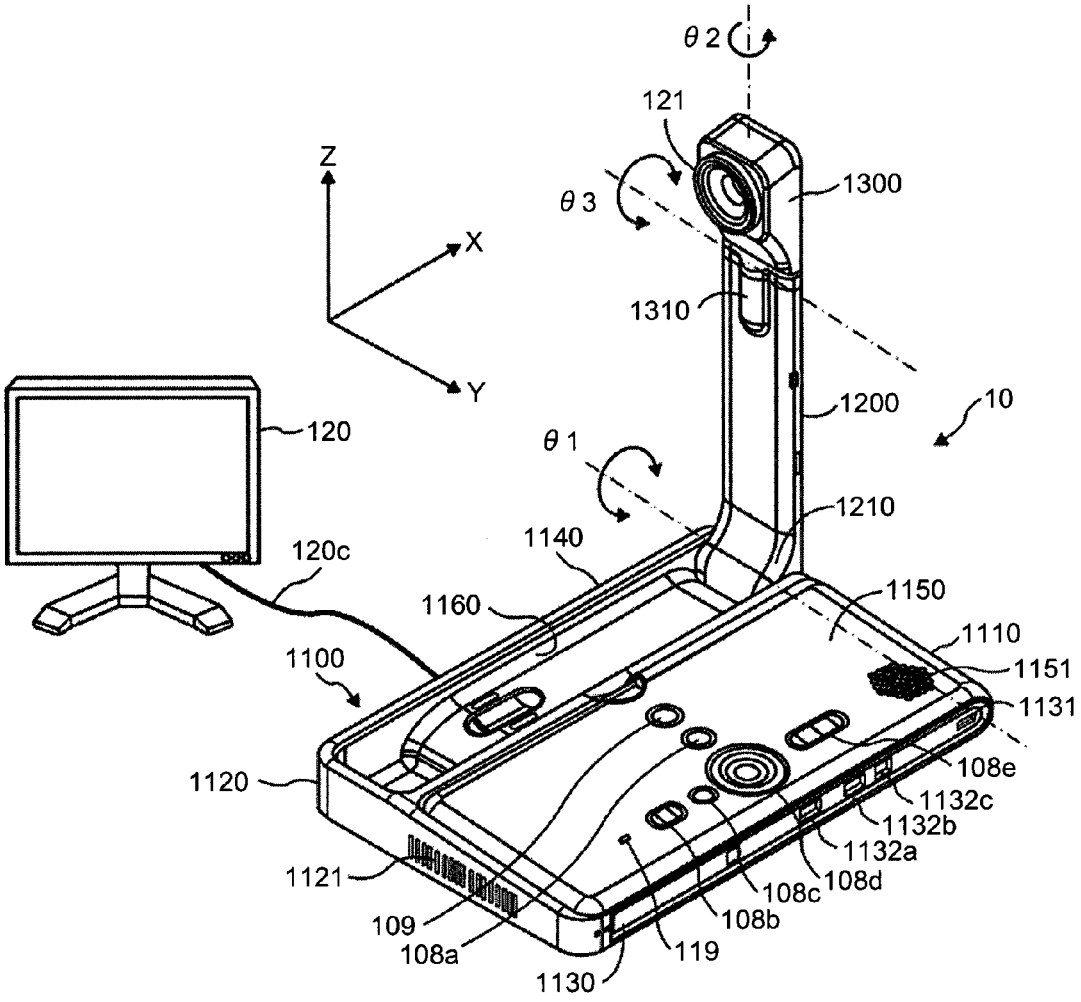
θ2
121
1300
Z
θ3
X
1310
Y
1200
10
120
θ1
1210
1140
120c
1150
1160
1110
1100
1151
1131
108e
1120
1132c
1132b
1132a
1121
108d
108c
109
108b
108a
119
1130

FIG.4

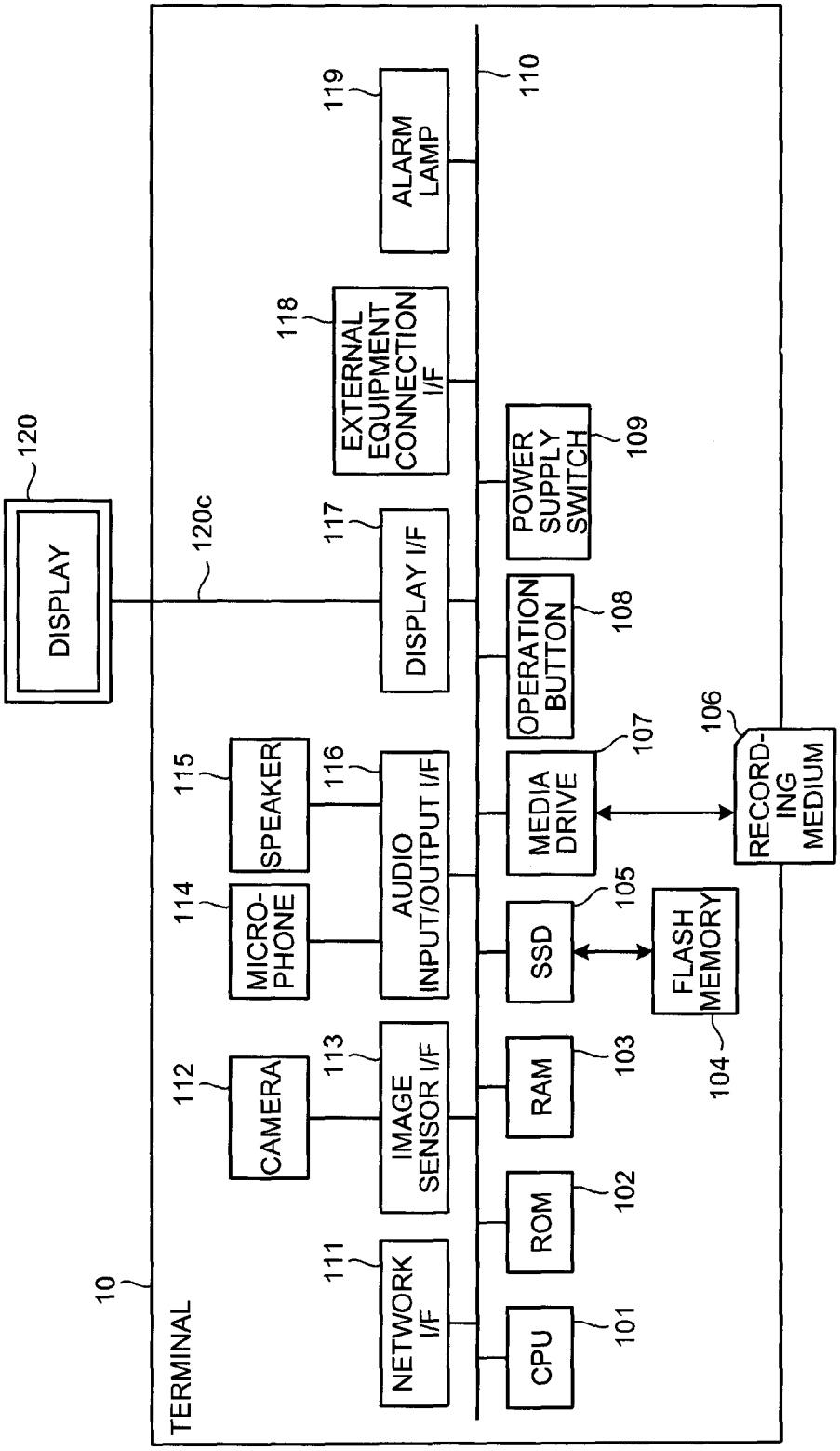
10
TERMINAL
120
DISPLAY
120c
111
NETWORK I/F
112
CAMERA
113
IMAGE SENSOR I/F
114
MICRO-PHONE
115
SPEAKER
116
AUDIO INPUT/OUTPUT I/F
117
DISPLAY I/F
118
EXTERNAL EQUIPMENT CONNECTION I/F
119
ALARM LAMP
110
101
CPU
102
ROM
103
RAM
105
SSD
104
FLASH MEMORY
107
MEDIA DRIVE
106
RECORD-ING MEDIUM
108
OPERATION BUTTON
109
POWER SUPPLY SWITCH

FIG.5

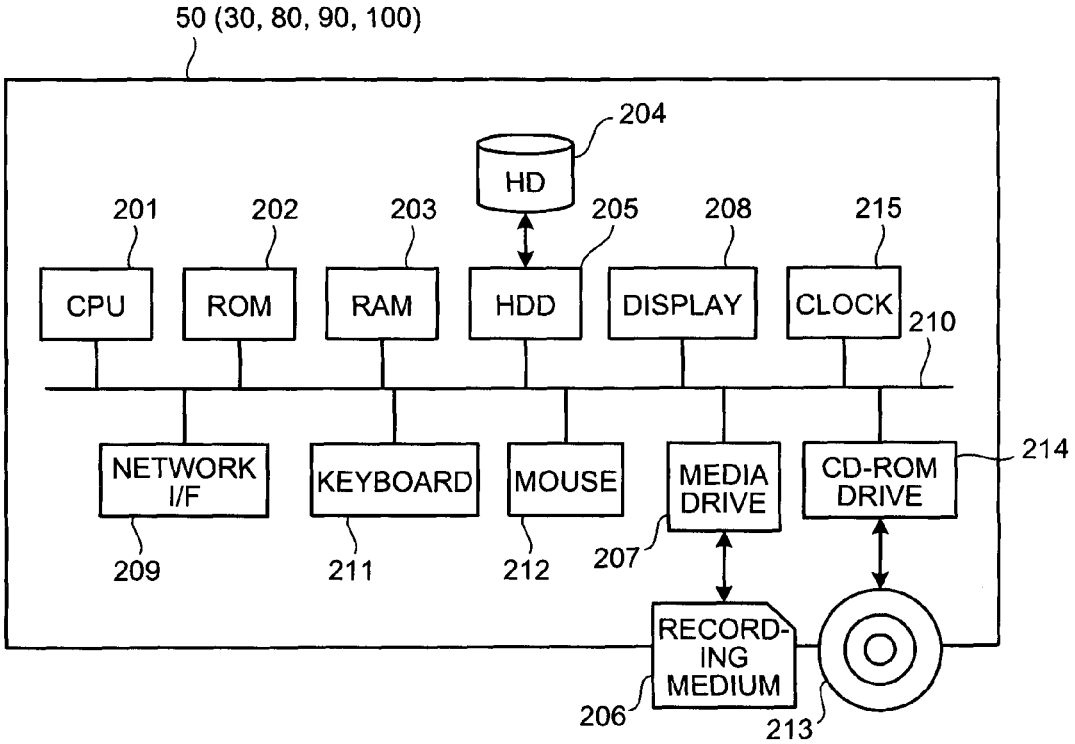
50 (30, 80, 90, 100)
204
HD
201
202
203
205
208
215
CPU
ROM
RAM
HDD
DISPLAY
CLOCK
210
NETWORK I/F
KEYBOARD
MOUSE
MEDIA DRIVE
CD-ROM DRIVE
214
209
211
212
207
RECORD-ING MEDIUM
206
213

FIG.6

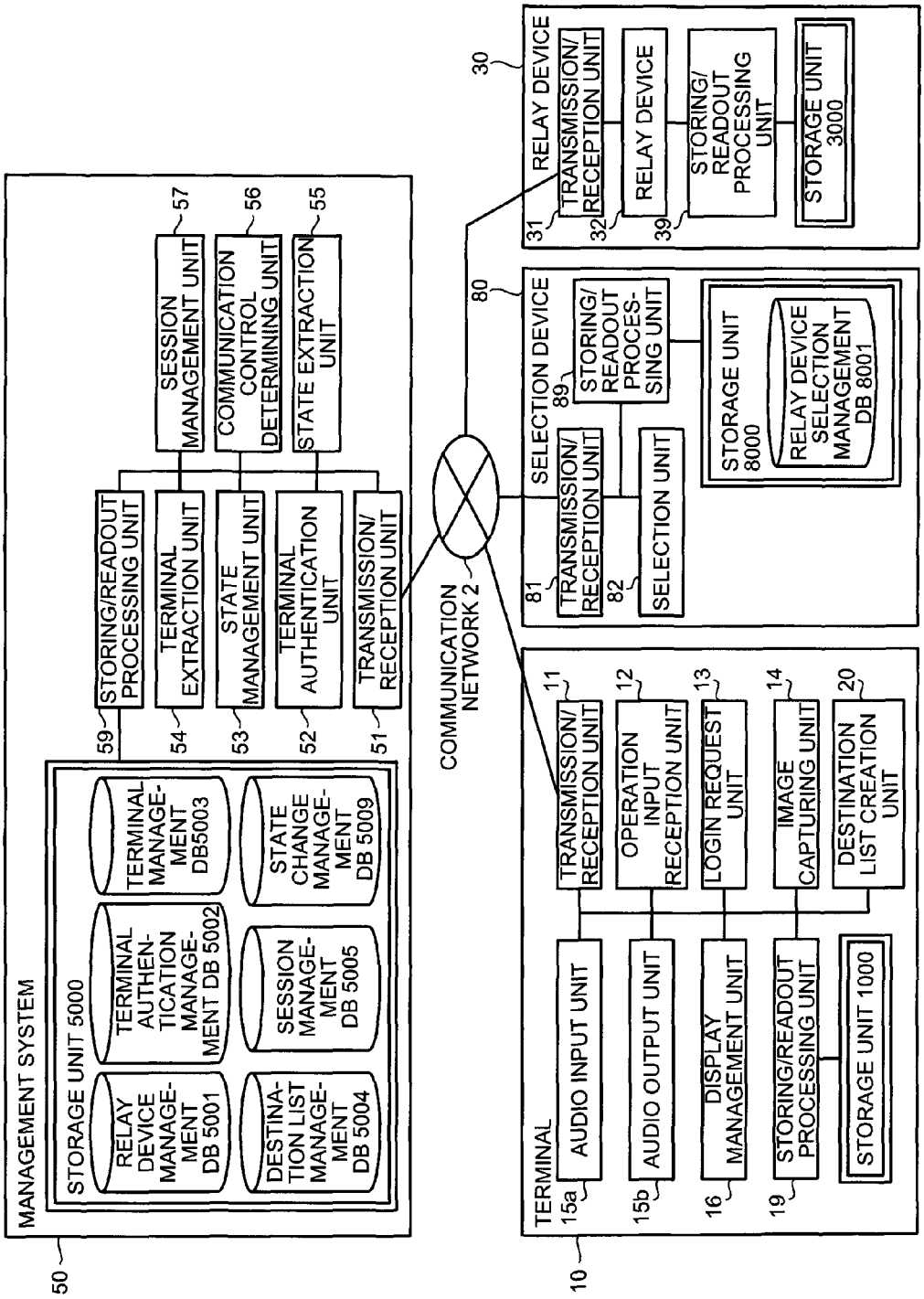
MANAGEMENT SYSTEM
50
STORAGE UNIT 5000
RELAY DEVICE MANAGEMENT DB 5001
TERMINAL AUTHENTICATION MANAGEMENT DB 5002
TERMINAL MANAGEMENT DB5003
DESTINATION LIST MANAGEMENT DB 5004
SESSION MANAGEMENT DB 5005
STATE CHANGE MANAGEMENT DB 5009
STORING/READOUT PROCESSING UNIT 59
TERMINAL EXTRACTION UNIT 54
STATE MANAGEMENT UNIT 53
TERMINAL AUTHENTICATION UNIT 52
TRANSMISSION/RECEPTION UNIT 51
SESSION MANAGEMENT UNIT 57
COMMUNICATION CONTROL DETERMINING UNIT 56
STATE EXTRACTION UNIT 55
COMMUNICATION NETWORK 2
RELAY DEVICE 30
TRANSMISSION/RECEPTION UNIT 31
RELAY DEVICE 32
STORING/READOUT PROCESSING UNIT 39
STORAGE UNIT 3000
SELECTION DEVICE 80
TRANSMISSION/RECEPTION UNIT 81
SELECTION UNIT 82
STORING/READOUT PROCESSING UNIT 89
STORAGE UNIT 8000
RELAY DEVICE SELECTION MANAGEMENT DB 8001
TERMINAL 10
TRANSMISSION/RECEPTION UNIT 11
OPERATION INPUT RECEPTION UNIT 12
LOGIN REQUEST UNIT 13
IMAGE CAPTURING UNIT 14
DESTINATION LIST CREATION UNIT 20
AUDIO INPUT UNIT 15a
AUDIO OUTPUT UNIT 15b
DISPLAY MANAGEMENT UNIT 16
STORING/READOUT PROCESSING UNIT 19
STORAGE UNIT 1000

FIG.7

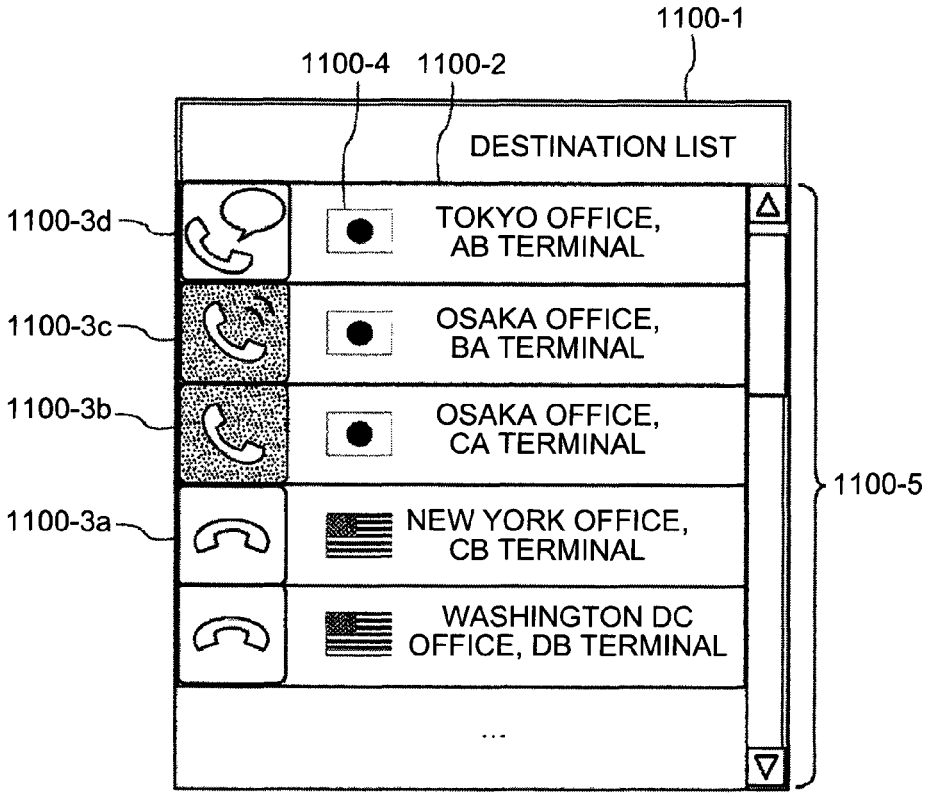

FIG.8

(a) RELAY DEVICE MANAGEMENT TABLE

RELAY DEVICE ID	PASSWORD
111a@jp.oo.com	xxxx
111b@jp.oo.com	yyyy

(b) RELAY DEVICE MANAGEMENT TABLE

RELAY DEVICE ID	PASSWORD
111c@us.oo.com	xyxy
111d@us.oo.com	zyzy

FIG.9

(a) TERMINAL AUTHENTICATION MANAGEMENT TABLE

TERMINAL ID/DOMAIN INFORMATION	PASSWORD
01aa@jp.oo.com	aaaa
01ab@jp.oo.com	abab
01ba@jp.oo.com	baba
...	...

(b) TERMINAL AUTHENTICATION MANAGEMENT TABLE

TERMINAL ID/DOMAIN INFORMATION	PASSWORD
01ca@us.oo.com	cccc
01cb@us.oo.com	cdcd
01da@us.oo.com	dcdc
...	...

FIG.10

(a) TERMINAL MANAGEMENT TABLE

TERMINAL ID	DESTINATION NAME	STATE INFORMATION
01aa@jp.oo.com	TOKYO OFFICE, AA TERMINAL	None
01ab@jp.oo.com	TOKYO OFFICE, AB TERMINAL	Busy
...	...	...
01ba@jp.oo.com	OSAKA OFFICE, BA TERMINAL	Calling
01bb@jp.oo.com	OSAKA OFFICE, BB TERMINAL	Ringing
...	...	...
01db@us.oo.com	WASHINGTON DC OFFICE, DB TERMINAL	None
...	...	...

(b) TERMINAL MANAGEMENT TABLE

TERMINAL ID	DESTINATION NAME	STATE INFORMATION
01ca@us.oo.com	NEW YORK OFFICE, CA TERMINAL	None
01cb@us.oo.com	NEW YORK OFFICE, CB TERMINAL	Offline
...	...	...
01da@us.oo.com	WASHINGTON DC OFFICE, DA TERMINAL	Accepted
01db@us.oo.com	WASHINGTON DC OFFICE, DB TERMINAL	None
...	...	...
01aa@jp.oo.com	TOKYO OFFICE, AA TERMINAL	None
...	...	...

FIG.11

(a) DESTINATION LIST MANAGEMENT TABLE

TERMINAL ID	
REQUESTOR	DESTINATION
01aa@jp.oo.com	01ab@jp.oo.com 01ba@jp.oo.com 01ca@us.oo.com 01cb@us.oo.com 01db@us.oo.com
01ab@jp.oo.com	01aa@jp.oo.com 01ca@us.oo.com 01cb@us.oo.com 01cc@us.oo.com
...	...

(b) DESTINATION LIST MANAGEMENT TABLE

TERMINAL ID	
REQUESTOR	DESTINATION
01ca@us.oo.com	01aa@jp.oo.com 01ba@jp.oo.com 01cb@us.oo.com 01db@us.oo.com
01cb@us.oo.com	01aa@jp.oo.com 01ca@us.oo.com 01cc@us.oo.com
...	...

FIG.12

(a) SESSION MANAGEMENT TABLE

SESSION ID	RELAY DEVICE ID	TERMINAL ID
se01@jp.oo.com	111a@jp.oo.com	01ab@jp.oo.com,01db@us.oo.com
se02@jp.oo.com	111b@jp.oo.com	01bd@jp.oo.com
...	...	...

(b) SESSION MANAGEMENT TABLE

SESSION ID	RELAY DEVICE ID	TERMINAL ID
se51@us.oo.com	111c@us.oo.com	01da@us.oo.com,01cc@us.oo.com
se52@us.oo.com	111b@us.oo.com	01be@us.oo.com
...	...	...

FIG.13

(a) STATE CHANGE MANAGEMENT TABLE (Call, Join, Leave)

MANAGEMENT INFORMATION	STATE INFORMATION BEFORE CHANGE	STATE INFORMATION AFTER CHANGE
Call	None	Accepted
Join	Accepted	Busy
Leave	Busy	None

(b) STATE CHANGE MANAGEMENT TABLE (Invite, Accepted)

MANAGEMENT INFORMATION	TERMINAL INFORMATION	STATE INFORMATION BEFORE CHANGE	STATE INFORMATION AFTER CHANGE
Invite	SOURCE	None	Inviting
	DESTINATION	None	Invited
Ring	DESTINATION	Inviting	Calling
	SOURCE	Invited	Ringing
Accept	DESTINATION	Calling	Accepted
		Accepted	Accepted
	SOURCE	Ringing	Accepted

FIG.14

RELAY DEVICE SELECTION MANAGEMENT TABLE

RELAY DEVICE ID	TERMINAL ID	PRIORITY
111a@jp.oo.com	01aa@jp.oo.com	3
	...	...
	01db@us.oo.com	2
	...	...
111b@jp.oo.com	01aa@jp.oo.com	1
	...	...
	01db@us.oo.com	1
	...	...
111c@us.oo.com	01aa@jp.oo.com	1
	...	...
	01db@us.oo.com	2
	...	...
111d@us.oo.com	01aa@jp.oo.com	1
	...	...
	01db@us.oo.com	4
	...	...

FIG.15

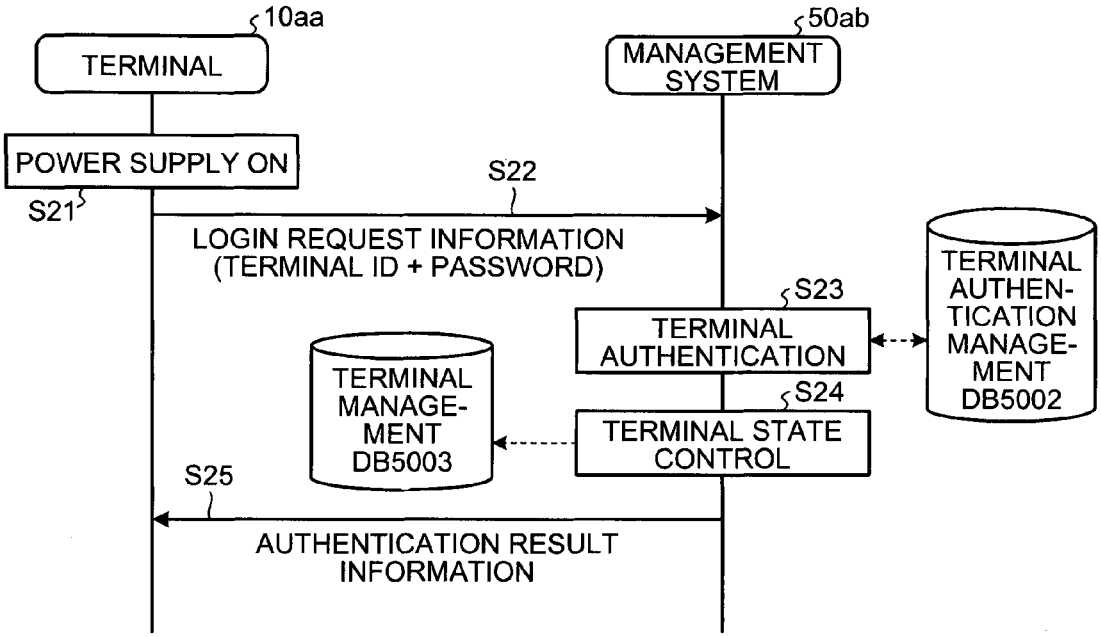
10aa
TERMINAL
50ab
MANAGEMENT SYSTEM
POWER SUPPLY ON
S21
S22
LOGIN REQUEST INFORMATION
(TERMINAL ID + PASSWORD)
S23
TERMINAL AUTHENTICATION
TERMINAL AUTHEN-TICATION MANAGE-MENT DB5002
TERMINAL MANAGE-MENT DB5003
S24
TERMINAL STATE CONTROL
S25
AUTHENTICATION RESULT INFORMATION

FIG.16

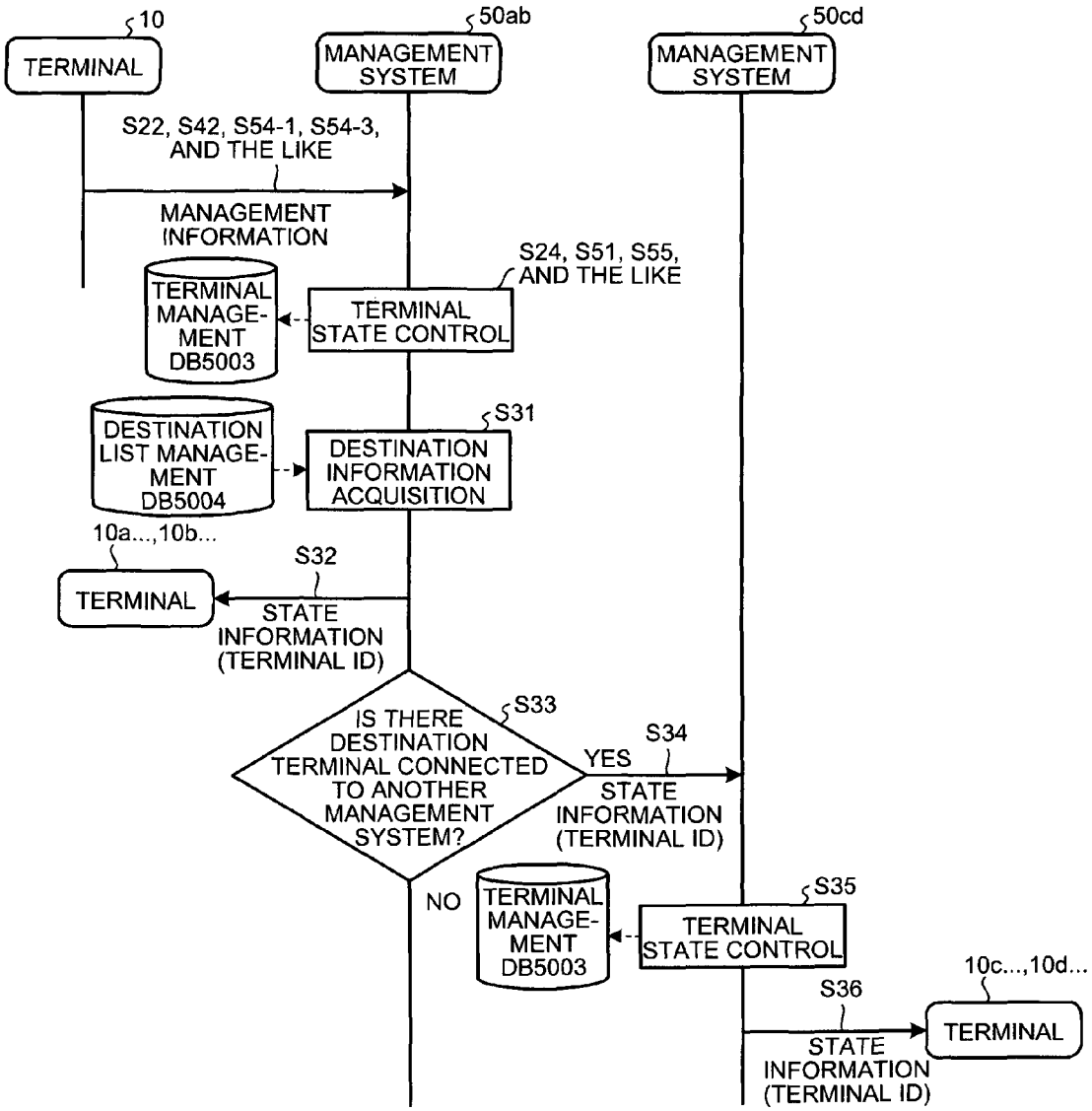
10
TERMINAL
50ab
MANAGEMENT SYSTEM
50cd
MANAGEMENT SYSTEM
S22, S42, S54-1, S54-3, AND THE LIKE
MANAGEMENT INFORMATION
S24, S51, S55, AND THE LIKE
TERMINAL MANAGE-MENT DB5003
TERMINAL STATE CONTROL
S31
DESTINATION LIST MANAGE-MENT DB5004
DESTINATION INFORMATION ACQUISITION
10a...,10b...
S32
TERMINAL
STATE INFORMATION (TERMINAL ID)
S33
IS THERE DESTINATION TERMINAL CONNECTED TO ANOTHER MANAGEMENT SYSTEM?
YES
S34
STATE INFORMATION (TERMINAL ID)
NO
TERMINAL MANAGE-MENT DB5003
S35
TERMINAL STATE CONTROL
10c...,10d...
S36
TERMINAL
STATE INFORMATION (TERMINAL ID)

FIG.17

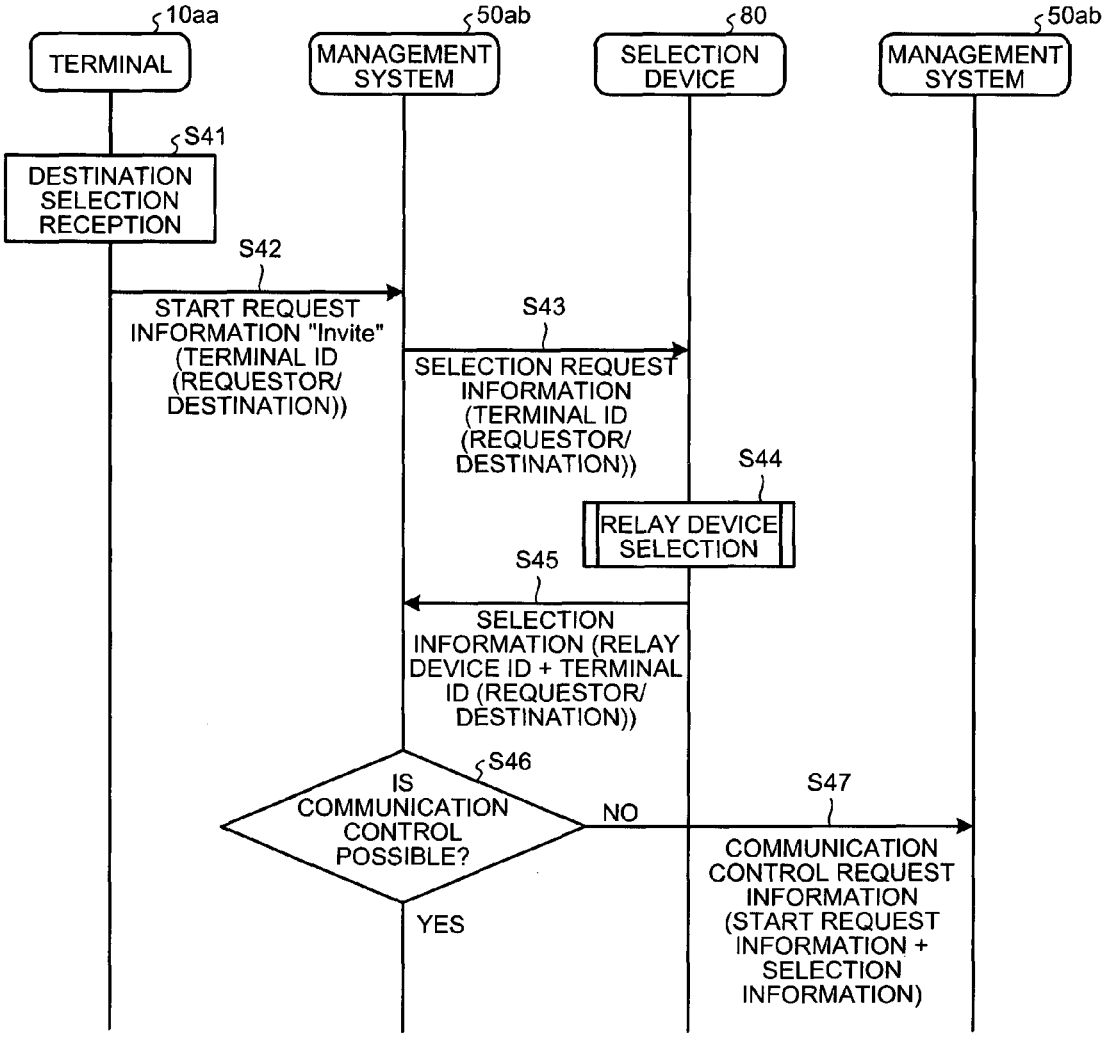
10aa
TERMINAL
50ab
MANAGEMENT SYSTEM
80
SELECTION DEVICE
50ab
MANAGEMENT SYSTEM
S41
DESTINATION SELECTION RECEPTION
S42
START REQUEST INFORMATION "Invite" (TERMINAL ID (REQUESTOR/ DESTINATION))
S43
SELECTION REQUEST INFORMATION (TERMINAL ID (REQUESTOR/ DESTINATION))
S44
RELAY DEVICE SELECTION
S45
SELECTION INFORMATION (RELAY DEVICE ID + TERMINAL ID (REQUESTOR/ DESTINATION))
S46
IS COMMUNICATION CONTROL POSSIBLE?
NO
YES
S47
COMMUNICATION CONTROL REQUEST INFORMATION (START REQUEST INFORMATION + SELECTION INFORMATION)

FIG.18

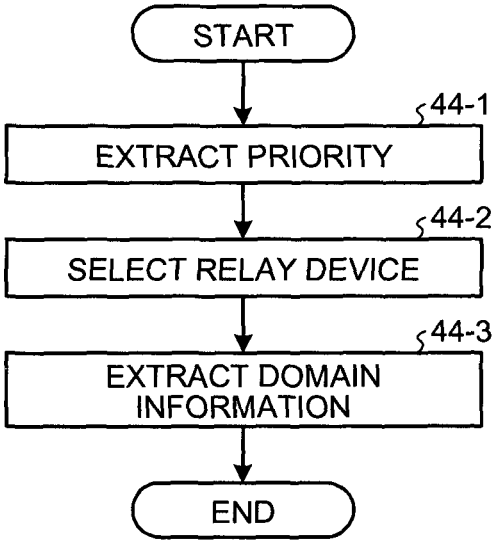
START
44-1
EXTRACT PRIORITY
44-2
SELECT RELAY DEVICE
44-3
EXTRACT DOMAIN INFORMATION
END

FIG.19

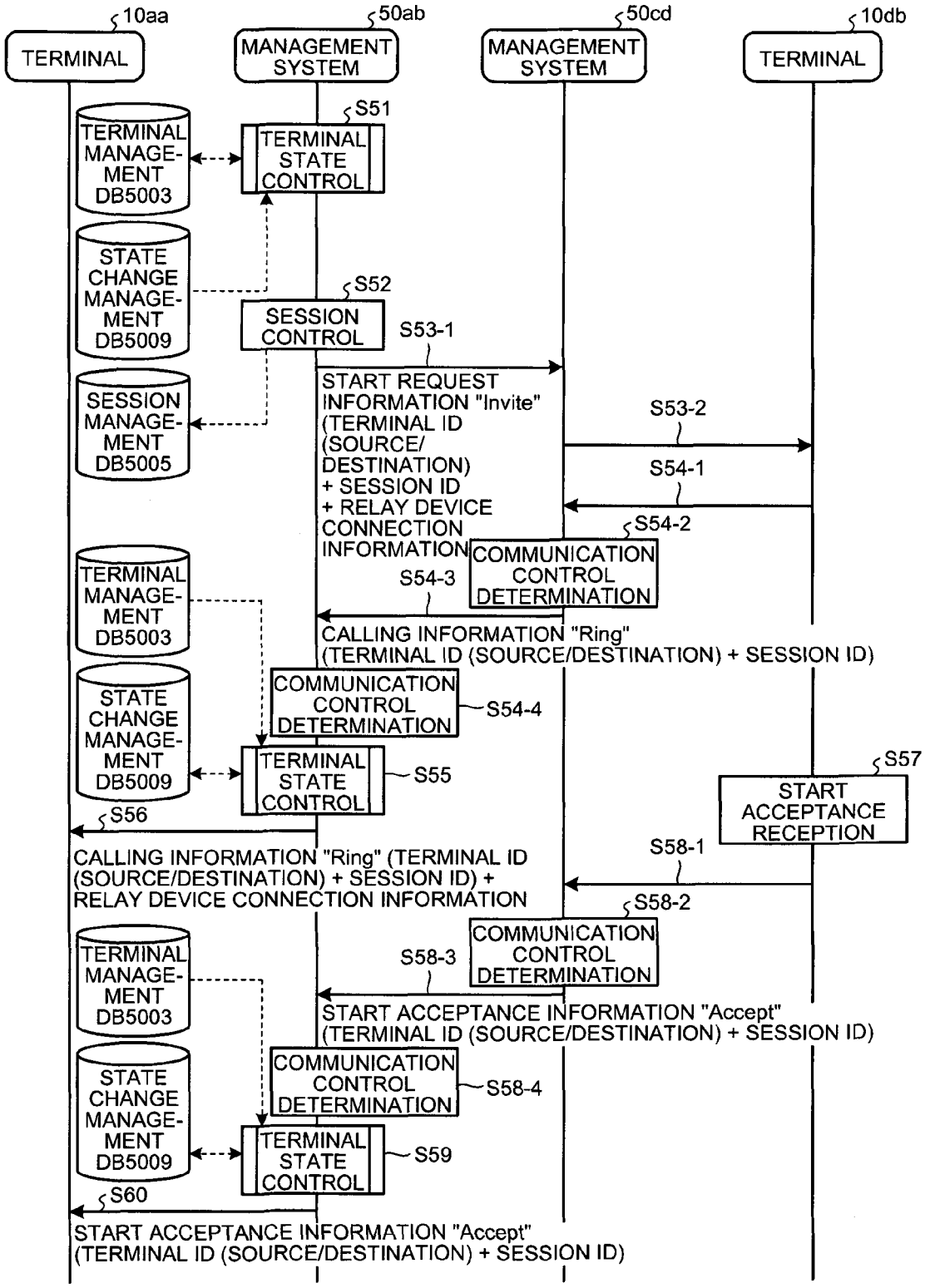
10aa
TERMINAL
50ab
MANAGEMENT SYSTEM
50cd
MANAGEMENT SYSTEM
10db
TERMINAL
TERMINAL MANAGEMENT DB5003
S51
TERMINAL STATE CONTROL
STATE CHANGE MANAGEMENT DB5009
S52
SESSION CONTROL
S53-1
SESSION MANAGEMENT DB5005
START REQUEST INFORMATION "Invite" (TERMINAL ID (SOURCE/DESTINATION) + SESSION ID + RELAY DEVICE CONNECTION INFORMATION
S53-2
S54-1
S54-2
COMMUNICATION CONTROL DETERMINATION
S54-3
TERMINAL MANAGEMENT DB5003
CALLING INFORMATION "Ring" (TERMINAL ID (SOURCE/DESTINATION) + SESSION ID)
COMMUNICATION CONTROL DETERMINATION
S54-4
STATE CHANGE MANAGEMENT DB5009
TERMINAL STATE CONTROL
S55
S57
START ACCEPTANCE RECEPTION
S56
CALLING INFORMATION "Ring" (TERMINAL ID (SOURCE/DESTINATION) + SESSION ID) + RELAY DEVICE CONNECTION INFORMATION
S58-1
S58-2
COMMUNICATION CONTROL DETERMINATION
S58-3
TERMINAL MANAGEMENT DB5003
START ACCEPTANCE INFORMATION "Accept" (TERMINAL ID (SOURCE/DESTINATION) + SESSION ID)
COMMUNICATION CONTROL DETERMINATION
S58-4
STATE CHANGE MANAGEMENT DB5009
TERMINAL STATE CONTROL
S59
S60
START ACCEPTANCE INFORMATION "Accept" (TERMINAL ID (SOURCE/DESTINATION) + SESSION ID)

FIG.20

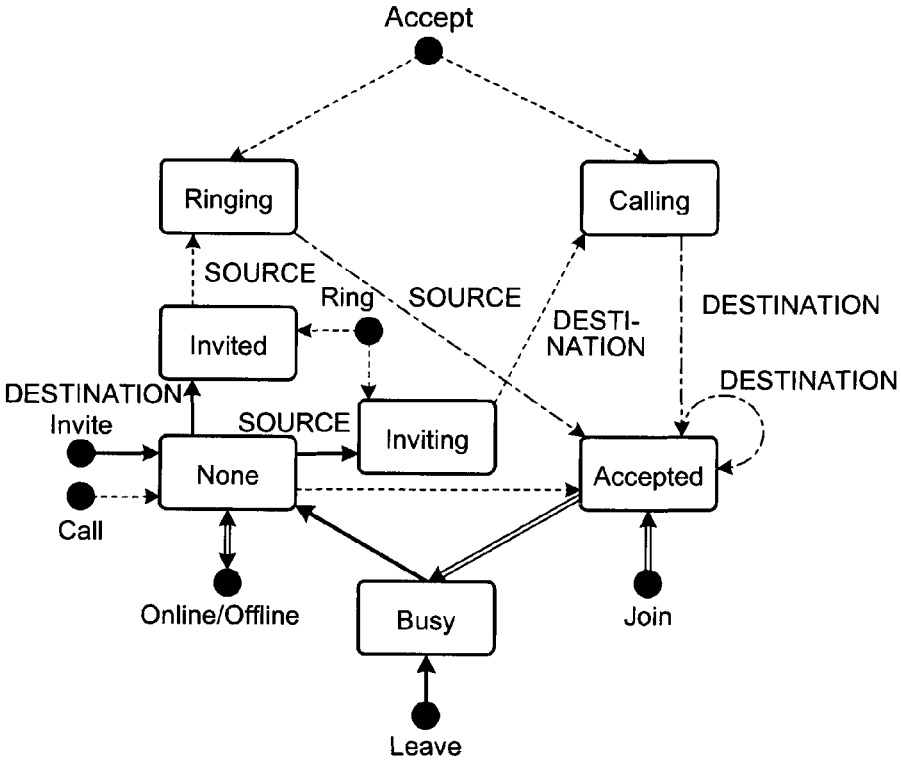
Accept
Ringing
Calling
SOURCE
Ring
SOURCE
DESTI-
NATION
DESTINATION
Invited
DESTINATION
DESTINATION
Invite
SOURCE
Inviting
None
Accepted
Call
Online/Offline
Busy
Join
Leave

FIG.21

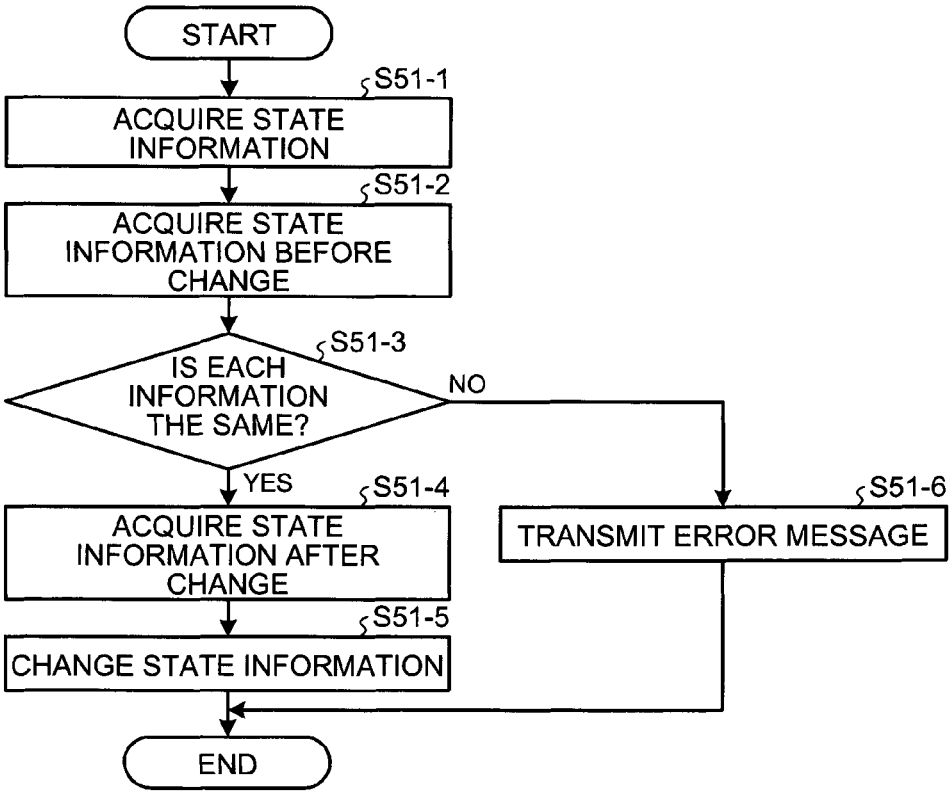
START
S51-1
ACQUIRE STATE INFORMATION
S51-2
ACQUIRE STATE INFORMATION BEFORE CHANGE
S51-3
IS EACH INFORMATION THE SAME?
NO
YES
S51-4
ACQUIRE STATE INFORMATION AFTER CHANGE
S51-6
TRANSMIT ERROR MESSAGE
S51-5
CHANGE STATE INFORMATION
END

FIG.22

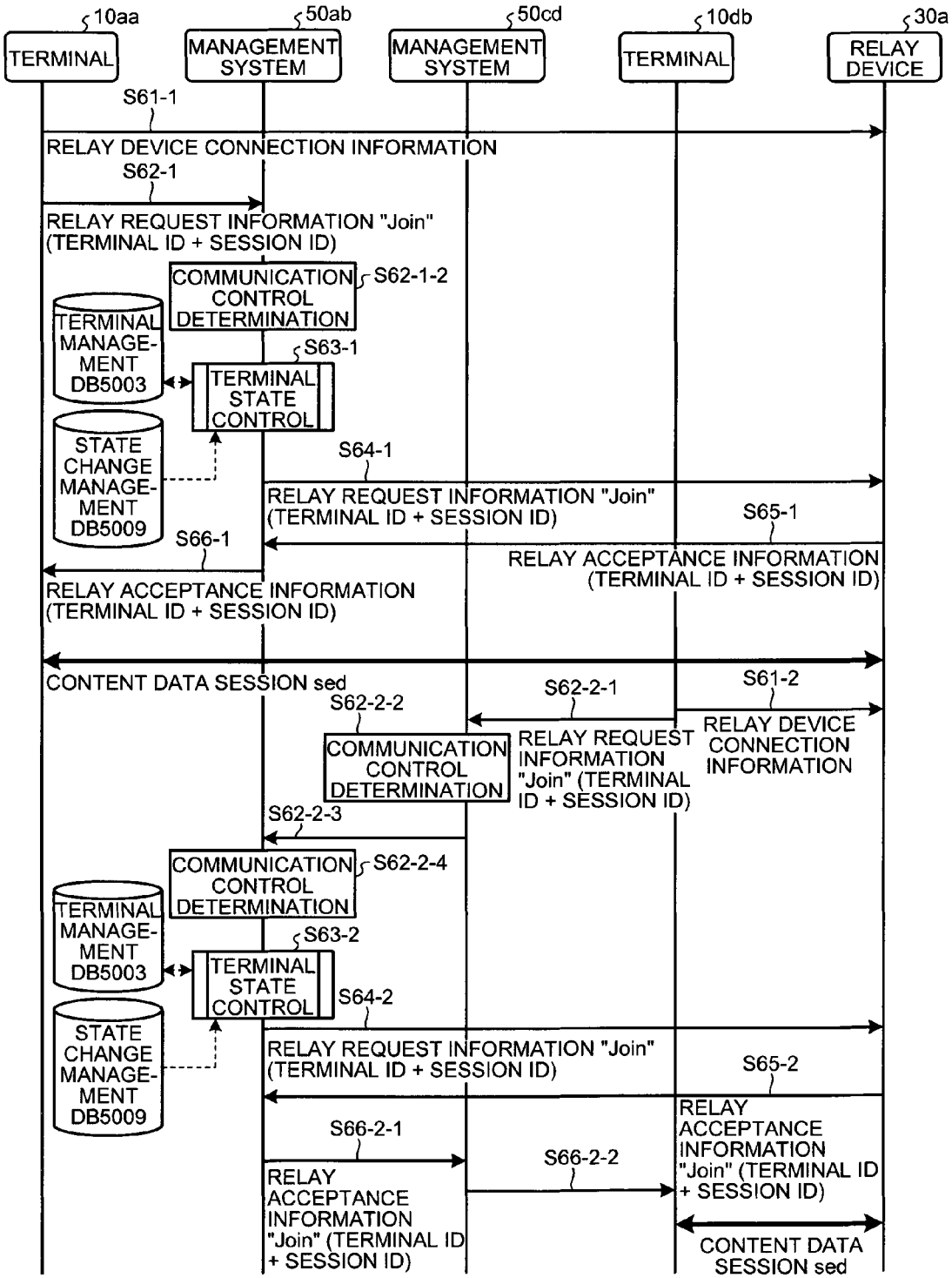
10aa
TERMINAL
50ab
MANAGEMENT SYSTEM
50cd
MANAGEMENT SYSTEM
10db
TERMINAL
30a
RELAY DEVICE
S61-1
RELAY DEVICE CONNECTION INFORMATION
S62-1
RELAY REQUEST INFORMATION "Join" (TERMINAL ID + SESSION ID)
COMMUNICATION CONTROL DETERMINATION
S62-1-2
TERMINAL MANAGE-MENT DB5003
S63-1
TERMINAL STATE CONTROL
STATE CHANGE MANAGE-MENT DB5009
S64-1
RELAY REQUEST INFORMATION "Join" (TERMINAL ID + SESSION ID)
S65-1
S66-1
RELAY ACCEPTANCE INFORMATION (TERMINAL ID + SESSION ID)
RELAY ACCEPTANCE INFORMATION (TERMINAL ID + SESSION ID)
CONTENT DATA SESSION sed
S62-2-1
S61-2
S62-2-2
RELAY DEVICE CONNECTION INFORMATION
COMMUNICATION CONTROL DETERMINATION
RELAY REQUEST INFORMATION "Join" (TERMINAL ID + SESSION ID)
S62-2-3
COMMUNICATION CONTROL DETERMINATION
S62-2-4
TERMINAL MANAGE-MENT DB5003
S63-2
TERMINAL STATE CONTROL
S64-2
STATE CHANGE MANAGE-MENT DB5009
RELAY REQUEST INFORMATION "Join" (TERMINAL ID + SESSION ID)
S65-2
S66-2-1
S66-2-2
RELAY ACCEPTANCE INFORMATION "Join" (TERMINAL ID + SESSION ID)
RELAY ACCEPTANCE INFORMATION "Join" (TERMINAL ID + SESSION ID)
CONTENT DATA SESSION sed

FIG.23

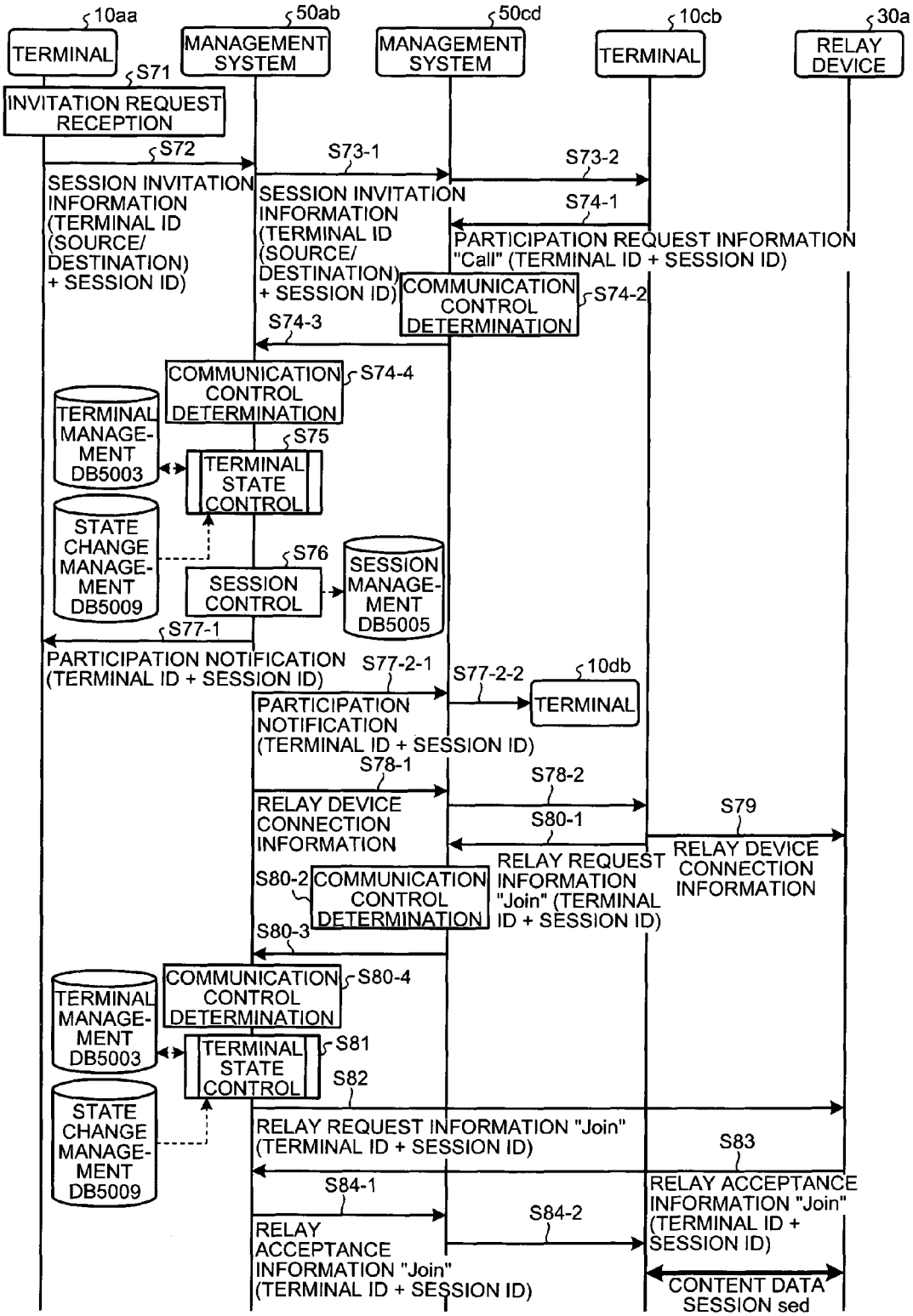
10aa
TERMINAL
50ab
MANAGEMENT SYSTEM
50cd
MANAGEMENT SYSTEM
10cb
TERMINAL
30a
RELAY DEVICE
S71
INVITATION REQUEST RECEPTION
S72
SESSION INVITATION INFORMATION (TERMINAL ID (SOURCE/ DESTINATION) + SESSION ID)
S73-1
SESSION INVITATION INFORMATION (TERMINAL ID (SOURCE/ DESTINATION) + SESSION ID)
S73-2
S74-1
PARTICIPATION REQUEST INFORMATION "Call" (TERMINAL ID + SESSION ID)
COMMUNICATION CONTROL DETERMINATION
S74-2
S74-3
COMMUNICATION CONTROL DETERMINATION
S74-4
TERMINAL MANAGE-MENT DB5003
S75
TERMINAL STATE CONTROL
STATE CHANGE MANAGE-MENT DB5009
S76
SESSION CONTROL
SESSION MANAGE-MENT DB5005
S77-1
PARTICIPATION NOTIFICATION (TERMINAL ID + SESSION ID)
S77-2-1
S77-2-2
10db
TERMINAL
PARTICIPATION NOTIFICATION (TERMINAL ID + SESSION ID)
S78-1
RELAY DEVICE CONNECTION INFORMATION
S78-2
S79
RELAY DEVICE CONNECTION INFORMATION
S80-1
RELAY REQUEST INFORMATION "Join" (TERMINAL ID + SESSION ID)
S80-2
COMMUNICATION CONTROL DETERMINATION
S80-3
COMMUNICATION CONTROL DETERMINATION
S80-4
TERMINAL MANAGE-MENT DB5003
TERMINAL STATE CONTROL
S81
S82
STATE CHANGE MANAGE-MENT DB5009
RELAY REQUEST INFORMATION "Join" (TERMINAL ID + SESSION ID)
S83
RELAY ACCEPTANCE INFORMATION "Join" (TERMINAL ID + SESSION ID)
S84-1
RELAY ACCEPTANCE INFORMATION "Join" (TERMINAL ID + SESSION ID)
S84-2
CONTENT DATA SESSION sed

FIG.24

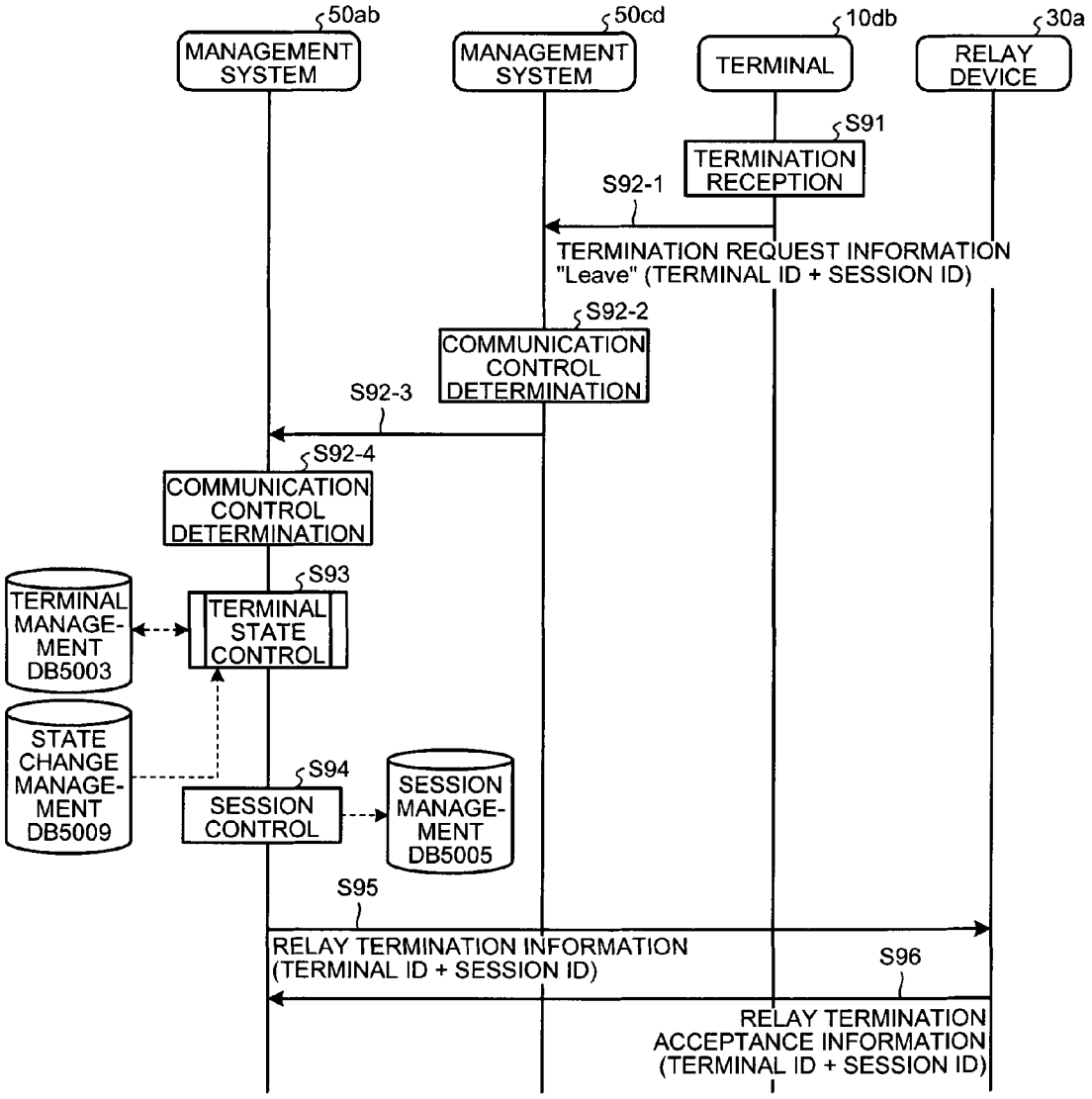
50ab
MANAGEMENT SYSTEM
50cd
MANAGEMENT SYSTEM
10db
TERMINAL
30a
RELAY DEVICE
S91
TERMINATION RECEPTION
S92-1
TERMINATION REQUEST INFORMATION "Leave" (TERMINAL ID + SESSION ID)
S92-2
COMMUNICATION CONTROL DETERMINATION
S92-3
S92-4
COMMUNICATION CONTROL DETERMINATION
S93
TERMINAL MANAGE-MENT DB5003
TERMINAL STATE CONTROL
STATE CHANGE MANAGE-MENT DB5009
S94
SESSION CONTROL
SESSION MANAGE-MENT DB5005
S95
RELAY TERMINATION INFORMATION (TERMINAL ID + SESSION ID)
S96
RELAY TERMINATION ACCEPTANCE INFORMATION (TERMINAL ID + SESSION ID)

FIG.25

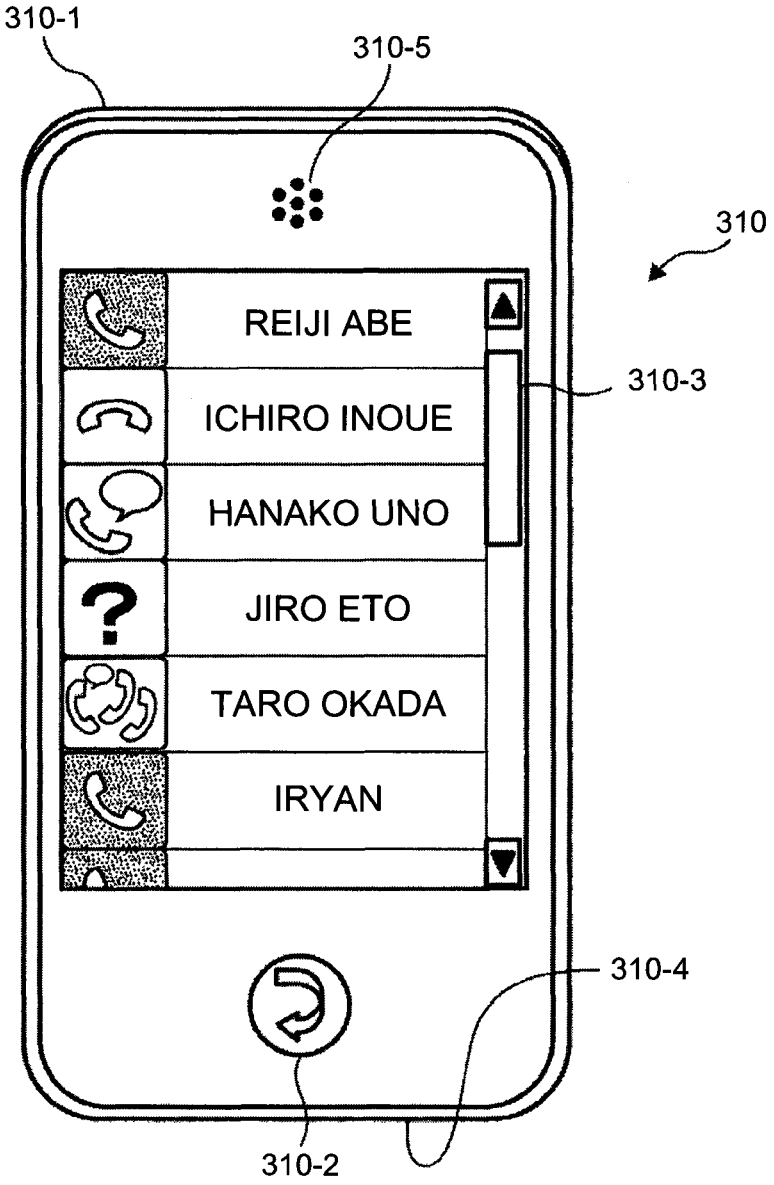
310-1
310-5
310
REIJI ABE
ICHIRO INOUE
HANAKO UNO
JIRO ETO
TARO OKADA
IRYAN
310-3
310-4
310-2

TRANSMISSION MANAGEMENT SYSTEM, TRANSMISSION SYSTEM, AND TRANSMISSION MANAGEMENT SYSTEM PROGRAM

TECHNICAL FIELD

The present invention relates to a transmission management system that controls a state of a transmission terminal.

BACKGROUND ART

In recent years, responding to a demand of reduction of expenses and time for business trips, television conference systems have spread as an example of a transmission system that conducts a television conference via a communication network, such as the Internet. In such a television conference system, the various types of data, for example image data and audio data are transmitted/received between the television conference terminals as an example of transmission terminal to realize the television conference.

Furthermore, in the conventional television conference system, control associated with start or termination of communication among the television conference terminals is executed using a transmission management system (see Patent Document 1 Japanese Patent Application Laid-Open Publication No. 2012-50063, which is incorporated herein by reference in its entirety). In this case, the transmission management system establishes, when receiving a request of the start of communication from a television conference terminal, a session that transmits/receives the data among the television conference terminals by the control associated with start of communication. The transmission management system that has executed the control can control the state of the television conference terminals by updating the state of a requestor television conference terminal of the start of communication during the communication, for example.

However, conventionally related transmission system executes the control associated with the start or termination of communication in one transmission management system. Therefore, if a lot of the start of communication occur at the same time, the single transmission management system should control a plurality of connections between the transmission terminals and the relay devices. As a result, that leads significantly increase of the load applied to the one transmission management system. In a case where a plurality of transmission management systems is provided in order to disperse the loads, when one transmission management system has executed control associated with communication to change the state of a transmission terminal, another transmission management system cannot manage the state of the transmission terminal.

DISCLOSURE OF INVENTION

The invention of claim **1** provides a transmission management system. The transmission management system includes: a state management unit to manage state information indicating a state of a transmission terminal; a communication control unit to execute control associated with communication of the transmission terminal; a first change processing unit to change the state information being managed by the state management unit into the state information indicating a changed state through the control, if the control is executed by the communication control unit; a state information after change reception unit to receive state information after change indicating the changed state through the control, if the control is executed by another transmission management system, from the other transmission management system; and a second change processing unit to change the state information managed by the state management unit based on the state information after change received by the state information after change reception unit.

BRIEF DESCRIPTION OF DRAWINGS

FIG. **1** is a schematic diagram of a transmission system according to an embodiment of the present invention.

FIG. **2** is a diagram illustrating a transmission system working at transmission/reception of image data, audio data, and various types of management information.

FIG. **3** is a perspective view of a terminal according to the embodiment of the present invention.

FIG. **4** is a schematic diagram illustrating hardware configuration of the terminal according to the embodiment of the present invention.

FIG. **5** is a schematic diagram of a hardware configuration of a management system according to an embodiment of the present invention.

FIG. **6** is a function block diagram of the transmission system including a terminal, device, and system, according to the embodiment of the present invention.

FIG. **7** is a schematic diagram illustrating a concept of a destination list.

FIG. **8** is a schematic diagram illustrating a concept of a relay device management table.

FIG. **9** is a schematic diagram illustrating a concept of a terminal authentication management table.

FIG. **10** is a schematic diagram illustrating a concept of a terminal management table.

FIG. **11** is a schematic diagram illustrating a concept of a destination list management table.

FIG. **12** is a schematic diagram illustrating a concept of a session management table.

FIG. **13** is a schematic diagram illustrating a concept of a state change management table.

FIG. **14** is a schematic diagram illustrating a concept of a relay device selection management table.

FIG. **15** is a schematic diagram illustrating a sequence of a process prior to the start of communication between the terminals.

FIG. **16** is a schematic diagram illustrating a sequence of a process of informing a change of a state of the terminals.

FIG. **17** is a schematic diagram illustrating a sequence of process of selecting a relay device.

FIG. **18** is a flowchart illustrating a process of selecting the relay device.

FIG. **19** is a schematic diagram illustrating a sequence of a process for requesting the start of communication between the terminals.

FIG. **20** is a schematic diagram illustrating a state change of the terminals.

FIG. **21** is a flowchart illustrating a process of the state change of the terminals.

FIG. **22** is a schematic diagram illustrating a sequence of a process for starting communication between terminals.

FIG. **23** is a schematic diagram illustrating a sequence of a process for starting communications among three terminals.

FIG. **24** is a sequence schematic diagram illustrating a sequence of a process for terminating communication.

FIG. **25** is a schematic diagram illustrating a concept of a destination list of according to alternative embodiment of the invention.

BEST MODE(S) FOR CARRYING OUT THE INVENTION

<Overall Configuration of Embodiment>

The present invention will be exemplarily described with the following embodiment of the present invention referring to figures associated with the embodiment of the invention. First, an entire configuration of the present embodiment will be described with reference to FIGS. **1** and **2**. FIG. **1** schematically shows a transmission system according to the embodiment of the present invention. FIG. **2** schematically shows a concept of a transmission and/or reception state of image data, audio data, and various types of management information through the transmission system.

The transmission system of the embodiment may include a data providing system in which content data is transmitted from one transmission terminal to the other transmission terminal in one-way manner, or a communication system in which information and the like is transmitted/received to/from among a plurality of transmission terminals. This communication system is a system for interactively transmitting information among a plurality of communication terminals (corresponding to "transmission terminals") via a communication management system (corresponding to a "transmission management system"), and examples of the system include a television conference system, a videophone system, an audio teleconference, a voice telephony system, and a personal computer (PC) screen sharing system, but are not limited thereto.

In the embodiment, a transmission system, a transmission management system, and a transmission terminal will be described on the basis of a television conference system as an example of the communication system, a television conference management system as an example of the communication management system, and a television conference terminal as an example of the communication terminal. That is, the transmission terminal and the transmission management system of the embodiment are not only applied to a television conference system, but also to a communication system and, a transmission system.

A transmission system **1** illustrated in FIG. **1** consists of a plurality of transmission terminals (**10***aa*, **10***ab*, . . .), displays (**120***aa*, **120***ab*, . . .) for each transmission terminal (**10***aa*, **10***ab*, . . .), a plurality of relay devices (**30***a*, **30***b*, **30***c*, and **30***d*), a plurality of transmission management systems (**50***ab*, **50***cd*), a relay device selection device **80**, a program providing system **90**, and a maintenance system **100**. A plurality of transmission terminals **10** perform transmission/reception of image data and audio data, which are examples of the content data. Note that an image of the image data may be a video image or a still image, and may be both of a video image and a still image. In the embodiment, a video image as an example of the image data will be described.

Note that, hereinafter, the "transmission terminal" is simply referred to as "terminal", the "transmission management system" is simply referred to as a "management system", and the "relay device selection device" is simply referred to as a "selection device." Furthermore, any management system from among the plurality of management systems (**50***ab* and **50***cd*) is referred to as a "management system **50**", any terminal from among the plurality of terminals (**10***aa*, **10***ab*, . . .) is referred to as a "terminal **10**", any display from among the plurality of displays (**120***aa*, **120***ab*, . . .) is referred to as a "display **120**", and any relay device from among the plurality of relay devices (**30***a*, **30***b*, **30***c*, and **30***d*) is referred to as a "relay device **30**."

As illustrated in FIG. **2**, a management information session sei for performing transmission/reception of various types of management information via the management system **50** is established between the terminals **10** in the transmission system **1**. Furthermore, a session for performing transmission/reception of image data and audio data via the relay device **30** is established between the terminals **10**. Here, the session for performing transmission/reception of image data and audio data is illustrated as content data session sed in a comprehensive manner.

The terminal **10** illustrated in FIG. **1** performs transmission/reception of content data, for example image data and audio data, to communicate with other terminals **10**. That is, the communication in the embodiment includes the transmission/reception of image data as well as that of audio data. Alternatively, the terminal **10** may only perform the transmission/reception of audio data not image data. The relay device **30** selected from among the plurality of relay devices **30** by the selection device **80** relays the content data to the terminals **10**.

A plurality of routers (**70***a*, **70***b*, **70***c*, **70***d*, **70***ab*, and **70***cd*) select an optimal route for the content data. Note that, hereinafter, any router from among the routers (**70***a*, **70***b*, **70***c*, **70***d*, **70***ab*, and **70***cd*) is referred to as a "router **70**."

The program providing system **90** includes a hard disk (HD) **204** described below, in which a terminal program for causing the terminal **10** to realize the various functions (or, causing the terminal **10** to function as various means) is stored, and is capable of transmitting the terminal program to the terminal **10**. The HD **204** of the program providing system **90** stores a relay device program for causing the relay device **30** to realize the various functions (or, causing the relay device **30** to function as various means), and the program providing system **90** is capable of transmitting the relay device program to the relay device **30**. The HD **204** of the program providing system **90** stores a selection device program for causing the selection device **80** to realize the various functions (or, causing the selection device **80** to function as various means), and the program providing system **90** is capable of transmitting the selection device program to the selection device **80**. The HD **204** of the program providing system **90** stores a maintenance system program for causing the maintenance system **100** to realize the various functions (or, causing the maintenance system **100** to function as various means), and is capable of transmitting the maintenance system **100** to the maintenance system program.

The maintenance system **100** is a computer that performs maintenance, management, and repair of at least one of the terminal **10**, the relay device **30**, the management system **50**, the selection device **80**, and the program providing system **90**. For example, in a case where the maintenance system **100** is domestically disposed, and the terminal **10**, the relay device **30**, the management system **50**, the selection device **80**, and the program providing system **90** are internationally disposed, the maintenance system **100** remotely performs maintenance, management, and repair of at least one of the terminal **10**, the relay device **30**, the management system **50**, the selection device **80**, and the program providing system **90** via the communication network **2**. The maintenance system **100** may perform maintenance or management of a model number, a serial number, a customer, inspection, and a trouble history of at least one of the terminal **10**, the relay

device **30**, the management system **50**, the selection device **80**, and the program providing system **90**, not via the communication network **2**.

By the way, the terminals (**10***aa*, **10***ab*, . . .), the relay device **30***a*, and the router **70***a* are connected by the LAN **2***a* so that they are able to communicate with each other. The terminals (**10***ba*, **10***bb*, . . .), the relay device **30***b*, and the router **70***b* are connected by the LAN **2***b* so that they can communicate with each other. The management system **50***ab*, the LAN **2***a* and the LAN **2***b* are connected by a leased line **2***ab* including the router **70***ab* so that they can communicate with each other, and are built in a predetermined region A. For example, the region A may be Japan, the LAN **2***a* may be built in a Tokyo office, and the LAN **2***b* may be built in an Osaka office. The management system **50***ab* manages the state of the terminal (**10***aa*, **10***ab*, . . . , **10***ba*, **10***bb*, . . .) connected to the LAN **2***a* or the LAN **2***b*, and controls connections between the terminals **10** by using the relay devices (**30***a* and **30***b*).

Meanwhile, the terminals (**10***ca*, **10***cb*, . . .), the relay device **30***c*, and the router **70***c* are connected by the LAN **2***c* so that they can communicate with each other. The terminals (**10***da*, **10***db*, . . .), the relay device **30***d*, and the router **70***d* are connected by the LAN **2***d* so that they can communicate with each other. The management system **50***cd*, the LAN **2***c*, and the LAN **2***d* are connected by a leased line **2***cd* including the router **70***cd* so that they can communicate with each other, and are built in a predetermined region B. For example, the region B may be the United States of America, the LAN **2***c* is built in a New York office, and the LAN **2***d* is built in Washington D.C. office. The region A is connected to the Internet **2***i* through the router **70***ab* and the region B is also connected to the Internet **2***i* through the router **70***cd*, so that the region A and the region B can communicate with each other. The management system **50***cd* manages the states of the terminals (**10***ca*, **10***cb*, . . . **10***da*, **10***db*, . . .) connected to the LAN **2***c* or the LAN **2***d*, and controls connection between the terminals **10** by using the relay devices (**30***c* and **30***d*).

In addition, the selection device **80**, the program providing system **90**, and the maintenance system **100** are connected with the terminals **10**, the relay devices **30**, and the management systems **50** via the Internet **2***i* so that they can communicate with each other. The selection device **80**, the program providing system **90**, and the maintenance system **100** may be disposed in the region A or the region B, or may be disposed in any region other than these regions.

Note that, in the embodiment, the communication network **2** of the embodiment is built by the LAN **2***a*, the LAN **2***b*, the leased line **2***ab*, the Internet **2***i*, the leased line **2***cd*, the LAN **2***c*, and the LAN **2***d*. This communication network **2** may include communication portions in which not only wired communication but also wireless communication by Wireless Fidelity (WiFi), Bluetooth (registered trademark), and the like is performed.

Note that each terminal **10** may be used for communication not only among a plurality of offices and between different rooms within the same office, but also within the same room, and between the outdoors and the indoors or between the outdoors and the outdoors. In a case where each terminal **10** is used outdoors, wireless communication using a mobile phone communication network, and the like may be performed.

<<Hardware Configuration of Embodiment>

Next, a hardware configuration of the embodiment will be described. First, a hardware configuration of the terminal **10** will be described with reference to FIG. **3** and FIG. **4**. FIG. **3** shows an appearance of the terminal according to the embodiment of the present invention. FIG. **4** shows a hardware configuration of the terminal according to the embodiment of the present invention. Note that hereinafter, the longitudinal direction of the terminal **10** is referred to as an X-axis direction, a direction perpendicular to the X-axis direction in a horizontal surface is referred to as a Y-axis direction, and a direction perpendicular to the X-axis direction and the Y-axis direction (vertical direction) is referred to as a Z-axis direction.

As illustrated in FIG. **3**, the terminal **10** includes a housing **1100**, an arm **1200**, and a camera housing **1300**. An inlet plane (not shown) in which a plurality of inlet holes are formed is provided in a front-side wall plane **1110** of the housing **1100**, and an outlet plane **1121** in which a plurality of outlet holes are formed is provided in a rear-side wall plane **1120** of the housing **1100**. With this structure, ambient air can be introduced into the terminal **10** from a front of the terminal through an inlet plane (not shown), and discharged to a rear of the terminal through the outlet plane **1121**, by driving a cooling fan built in the housing **1100**. A sound pickup hole **1131** is formed in a right-side wall plane **1130** of the housing **1100**, and a sound like a voice, an audio, and a noise, can be picked up by a built-in microphone **114** described below.

An operation panel **1150** is formed on a surface of the housing **1100** at a side of the right-side wall plane **1130**. This operation panel **1150** is provided with a plurality of operation buttons (**108***a* to **108***e*), a power supply switch **109**, and an alarm lamp **119** described below, and a sound output **1151** is formed with a plurality of audio output holes for allowing the audio output from a built-in speaker **115** to pass through. Also, a housing unit **1160** with a recess for resting the arm **1200** and the camera housing **1300** is formed on the surface of the housing **1140** at a side of a left-side wall plane **1140**. A plurality of connection ports (**1132***a* to **1132***c*) for electrically connecting a cable to an external equipment connection I/F **118** described below are provided on the right-side wall plane **1130** of the housing **1100**. On the other hand, a connection port (not shown) for electrically connecting a cable **120***c* for a display **120** to the external equipment connection I/F **118** described below is provided on the left-side wall plane **1140** of the housing **1100**.

Note that, hereinafter, any operation button from among the operation buttons (**108***a* to **108***e*) the operation buttons (**108***a* to **108***e*) is referred to as an "operation button **108**", and any connection port from among the connection ports (**1132***a* to **1132***c*) is referred to as a "connection port **1132**."

Next, the arm **1200** is attached to the housing **1100** with a torque hinge **1210**, so that the arm **1200** is rotatable up and down within a range of a tilt angle θ1 of 135 degrees relative to the housing **1100**. FIG. **3** illustrates a state of the tilt angle θ1 of 90 degrees.

A built-in camera **121** described below is provided inside the camera housing **1300**, and can take an image of a user, a document, a room, and the like. Also, a torque hinge **1310** is formed inside the camera housing **1300**. The camera housing **1300** is attached to the arm **1200** with the torque hinge **1310**. The camera housing **1300** is attached to the arm **1200** with the torque hinge **1310**, so that the camera housing **1300** is rotatable up and down and right and left within a range of a pan angle θ2 of ±180 degrees and of a tilt angle θ3 of ±45 degrees relative to the arm **1200**, if an angle of the arm illustrated in FIG. **3** is defined as 0 degrees.

As illustrated in FIG. **4**, the terminal **10** of the embodiment includes a central processing unit (CPU) **101** that controls an operation of the entire terminal **10**, a read only

memory (ROM) **102** that stores the terminal program, a random access memory (RAM) **103** used as a work area of the CPU **101**, a flash memory **104** that stores various types of data, for example image data and/or audio data, a solid state drive (SSD) **105** that controls reading/writing of various types of data for the flash memory **104** according to instructions from the CPU **101**, a media drive **107** that controls reading/writing (storing) of data for a recording medium **106**, for example a flash memory, an operation button **108** operated when a destination of the terminal **10** is selected, a power supply switch **109** for turning ON/OFF of a power supply of the terminal **10**, and a network I/F (interface) **111** for data transmission via the communication network **2** described below.

The terminal **10** includes the built-in camera **121** that obtains image data by taking an image of a subject according to instructions from the CPU **101**, an image sensor I/F **113** to control driving of the camera **121**, a built-in microphone **114** to receive a voice and audio, a built-in speaker **115** to output a voice and audio, an audio input/output I/F **116** to process input/output of an audio signal between the microphone **114** and the speaker **115** according to instructions from the CPU **101**, a display I/F **117** to transmit image data to the external display **120** according to instructions from the CPU **101**, an external equipment connection I/F **118** to connect the terminal **10** with various types of external equipment, an alarm lamp **119** to alert an error of the various functions of the terminal **10**, and a bus line **110**, for example an address bus and a data bus, to electrically connect the above-described elements each other, as illustrated in FIG. **4**.

The display **120** is a display unit made of a liquid crystal or an organic EL, which displays an image of the subject, an operation icon, and the like. Also, the display **120** is connected to the display I/F **11.7** through a cable **120***c*. The cable **120***c* may be one of a cable for an analog RGB (VGA) signal, a cable for a component video, and a cable for a high-definition multimedia interface (HDMI) or for a digital video interactive (DVI) signal.

The camera **121** includes a lens and a solid-state image sensor that converts light into an electric charge to electronically process the image (video) of the subject. As the solid-state image sensor, a charge coupled device (CCD), the complementary metal oxide semiconductor (CMOS), and the like may be available.

Each of external equipments, for example an external camera, an external microphone, and an external speaker, is capable of electrically connected with the external equipment connection I/F **118** through a universal serial bus (USB) cable inserted into the connection port **1132** of the housing **1100** illustrated in FIG. **3**. In a case where the external camera is connected, the external camera is driven in priority to the built-in camera **121** according to instructions from the CPU **101**. Similarly, in a case where the external microphone is connected or the external speaker is connected, the external microphone or the external speaker is driven in priority to the built-in microphone **114** or the built-in speaker **115** according to instructions from the CPU **101**.

Note that the recording medium **106** is configured to be detachable to the terminal **10**. Not limited to the flash memory **104**, as long as nonvolatile memory that performs reading/writing of data according to instructions from the CPU **101**, electrically erasable and programmable ROM (EEPROM) and the like may be used.

A computer-readable recording medium (recording medium **106**, and the like), in which a terminal program file is recorded thereon with an installable or executable format, may be distributed. Also, the terminal program may be stored in the ROM **102** instead of the flash memory **104**. Note that the embodiment of the terminal **10** has been described referring to FIGS. **3** and **4**, of the invention but the terminal of the invention is not limited to the embodiment. For example, the appearance and the hardware may be a typical desktop or notebook personal computer. In this case, the camera and the microphone may not be necessarily built in the terminal and may be externally equipped with the terminal.

Next, hardware configurations of the management system **50**, the relay device **30**, the selection device **80**, the program providing system **90**, and the maintenance system **100** will be described with reference to FIG. **5**. FIG. **5** is a hardware configuration diagram of a management system according to an embodiment of the present invention. Note that the relay device **30**, the management system **50**, the selection device **80**, the program providing system **90**, and the maintenance system **100** respectively have the same appearance as a typical server/computer. Therefore, description of the appearance is omitted.

The management system **50** includes a CPU **201** that controls an operation of the entire management system **50**, a ROM **202** that stores a program to drive the CPU **201**, for example an initial program loader (IPL), a RAM **203** used as a work area of the CPU **201**, an HD **204** that stores various types of data, for example a transmission management program, a hard disk drive (HDD) **205** that controls reading/writing of various types of data from/to the HD **204** according to instructions from the CPU **201**, a media drive **207** that controls reading/writing (storing) of data from/to the recording media **206** for example flash memory, a display **208** that displays various types of information, for example a cursor, a menu, a window, a character, and an image, a network I/F **209** to transmit data via the communication network **2**, a keyboard **211** including a plurality of keys to input a character, a numerical value, various instructions, and the like, a mouse **212** that selects/executes various instructions, selects an object to be processed, moves the cursor, and the like, a CD-ROM drive **214** that controls reading/writing of various types of data from/to the detachable recording medium, for example a compact disc read only memory (CD-ROM) **213**, a clock **215** as a built-in clock of the management system **50**, and a bus line **210**, for example an address bus and a data bus for electrically connecting the elements with each other as illustrated in FIG. **5**.

Note that a computer-readable recording medium, for example the recording medium **206** and the CD-ROM **213**, in which the above-described transmission management program file is recorded thereon with an installable or executable format, may be distributed. Alternatively, the above-described transmission management program may be stored in the ROM **202** instead of the HD **204**.

The relay device **30**, the selection device **80**, the program providing system **90**, and the maintenance system **100** include a hardware configuration similar to the above-described management system **50**, and therefore, detailed descriptions thereof are omitted. However, a relay device program, a selection device program, a program-providing program, and a maintenance program for controlling the relay device **30**, the selection device **80**, the program providing system **90**, or the maintenance system **100** are recorded in the HD **204**. Even in this case, a computer-readable recording medium, for example the above-described recording medium **206** and CD-ROM **213**, in which the program files are recorded thereon with an installable or

executable format may be distributed. Alternatively, the above-described programs may be stored in the ROM **202** instead of the HD **204**. Note that as other examples of the above-described detachable recording medium, a computer-readable recording medium, for example a compact disk drive (CD-R), a digital versatile disk (DVD), and a blue-ray disk, in which the program files are recorded thereon, may be distributed.

<<Functional Configuration of Embodiment>>

Next, a functional configuration of the embodiment will be described with reference to FIG. **6**. FIG. **6** is a function block diagram of the terminal, device, and system that configure the transmission system according to the embodiment of the present invention. In FIG. **6**, the terminal **10**, the relay device **30**, and the management system **50** are connected via a communication network **2** so that they can communicate with each other. Here, the program providing system **90** and the maintenance system **100** illustrated in FIG. **1** are omitted from FIG. **6** because they are directly associated with a television conference communication.

<Functional Configuration of Terminal>

The terminal **10** includes a transmission/reception unit **11**, an operation input reception unit **12**, a login request unit **13**, an image capturing unit **14**, an audio input unit **15***a*, an audio output unit **15***b*, a display management unit **16**, a storing/readout processing unit **19**, and a destination list creation unit **20**. These units are configured as the functions or means to function to be realized by operation of any one of the configuration elements illustrated in FIG. **4** according to instructions from the CPU **101** in response to a terminal program read from the flash memory **104** and developed on the RAM **103**. Further, the terminal **10** includes a storage unit **1000** built by the RAM **103** illustrated in FIG. **4** and the flash memory **104** illustrated in FIG. **4**. The storage unit **1000** stores a destination list box **1100-1** illustrated in FIG. **7**. Note that FIG. **7** shows a concept of a destination list.

(Functional Units of Terminal)

Next, functional configurations of the terminal **10** will be described with reference to FIGS. **4** and **6**. Note that, hereinafter, in describing the function of each element of the terminal **10**, a relation between the function of each element and the main elements for realizing the function of each element of the terminal **10** illustrated in FIG. **4** will also be described.

The transmission/reception unit **11** is realized by instructions from the CPU **101** illustrated in FIG. **4** and by the network I/F **111** illustrated in FIG. **4**, and performs transmission/reception of various types of data (or information) with other terminal, device, or system via the communication network **2**. The transmission/reception unit **11** starts receiving state information that indicates the state of the terminal **10** to be a destination candidate from the management system **50** prior to starting communication with other terminals **10**. Note that this state information indicates an operating state of each terminal **10** (online or offline, in a meeting even online, and the like). Also, this state information indicates not only the operating state of each terminal **10**, but also various states, for example the cable **120***c* being off, an audio being output only without an image, the audio output being suspended (MUTE), and the like, in the terminal **10**. Hereinafter, an example in which the state information indicates an operating state is described.

The operation input reception unit **12** is realized according to instructions from the CPU **101**, an operation button **108** and a power supply switch **109** illustrated in FIG. **4**. A user can input various inputs through the operation input reception unit **12**. For example, when the user turns ON the power supply switch **109** illustrated in FIG. **4**, the operation input reception unit **12** illustrated in FIG. **6** turns ON the power supply responding to the power supply ON.

The login request unit **13** is realized according to instructions from the CPU **101** illustrated in FIG. **4**. The login request unit **13** automatically transmits login request information that indicates a request of login from the transmission/reception unit **11** to the management system **50** via the communication network **2** upon receiving the above-described turning ON of the power supply. When the user turns OFF the power supply switch **109**, the transmission/reception unit **11** transmits state information that indicates turning OFF of the power supply to the management system **50**, and then the operation input reception unit **12** turns OFF the power supply completely. Consequently, the management system **50** can recognize that the terminal **10** has turned from power ON to power OFF. Note that, in the present embodiment, the terminals (**10***aa*, **10***ab*, . . . , **10***ba*, **10***bb*, . . .) on the LANs (**2***a* and **2***b*) are connected with the management system **50***ab*, and the terminals (**10***ca*, **10***cb*, . . . , **10***da*, **10***db*, . . .) on the LANs (**2***c* and **2***d*) are connected with the management system **50***cd*.

The image capturing unit **14** is realized according to instructions from the CPU **101** illustrated in FIG. **4**, the camera **121** and the image sensor I/F **113** illustrated in FIG. **4**. The image capturing unit **14** takes an image of a subject, and outputs image data of the subject.

The audio input unit **15***a* is realized according to instructions from the CPU **101** illustrated in FIG. **4** and the audio input/output I/F **116** illustrated in FIG. **4**. After user's voice is converted into an audio signal by the microphone **114**, the audio input unit **15***a* inputs audio data associated with the audio signal. The audio output unit **15***b* is realized according to instructions from the CPU **101** and by the audio input/output I/F **116** illustrated in FIG. **4**. The audio output unit **15***b* outputs to the speaker **115** the audio signal associated with the audio data, and outputs an audio from the speaker **115**.

The display management unit **16** is realized according to instructions from the CPU **101** and by the display I/F **117** illustrated in FIG. **4**. The display management unit **16** controls transmission of received image data to the display **120**.

The display management unit **16** also displays a destination list including destination names to the display **120** based on information received from the management system **50**. For example, the destination list box **1100-1** illustrated in FIG. **7** is displayed on the display **120** by the display management unit **16**. On the destination list box **1100-1**, destination names **1100-2**, for example "Tokyo office, AB terminal", icons (**1100-3***a*, **1100-3***b*, **1100-3***c*, **1100-3***d*) that indicate states of the terminals **10** of respective destination names, and an icon **1100-4** that indicates a region are displayed on the display **120**. Among them, the icon **1100-3***a* indicates that communication with this terminal is not possible because a terminal, which is one of the destination candidates, is an OFF line (hereinafter, this state is referred to as "Offline"), and that communication with this terminal is not possible. The icon **1100-3***b* indicates that the terminal **10**, which is one of the destination candidates, is ready prior to starting communication (hereinafter, this state is referred to as "None"). The icon **1100-3***c* indicates that the terminal **10**, which is one of the destination candidates, is requesting communication with other terminals (hereinafter, this state is referred to as "Calling"), or requested communication from other terminals **10** (hereinafter, this state is referred to as "Ringing"). The icon **1100-3***d* indicates that the terminal,

has accepted the request (hereinafter, this state of the terminal **10** is referred to as "Accepted"), or that the terminal **10**, which is one of the destination candidates, is communicating with other terminals **10** (hereinafter, this state is referred to as "Busy"). Also, a scroll bar **1100-5** is displayed at a right side in the destination list box **1100-1**. An upward-pointing triangular icon and a downward-pointing triangular icon are displayed in the scroll bar, by selecting either icon, destination name of the destination candidate that has not been displayed and an icon that indicates a state thereof are displayed.

The storing/readout processing unit **19** is realized according to instructions from the CPU **101** and by the SSD **105** illustrated in FIG. **4**, or according to instructions from the CPU **101**. The storing/readout processing unit **19** stores various types of data in the storage unit **1000** and reads out various types of data stored in the storage unit **1000**. The storage unit **1000** stores a terminal identification (ID) for identifying the terminal **10**, a password, and the like. In addition, the storage unit **1000** is overwritten with image data and audio data received in communicating with a destination terminal every time the data is received. Among the data, an image is displayed on the display **120** with image data prior to being overwritten, and an audio is output from the speaker **115** with audio data prior to being overwritten. Note that each IDs, for example the terminal ID in the embodiment, indicate identification information including a language, a character, a sign, and various symbols, for uniquely identifying the terminal **10** and the like. Also, the IDs may be identification information consisting of a combination of at least two from the language, the character, the sign, and the various symbols, described above.

The destination list creation unit **20** creates and updates the destination list in which the state of the terminal **10** of the destination candidate is illustrated by the icon as illustrated in FIG. **7** based on information received from the management system **50**.

<Functional Configuration of Relay Device>

The relay device **30** includes a transmission/reception unit **31**, a relay device **32**, and a storing/readout processing unit **39**. These units are configured as the functions or means to function to be realized by operation of any of the configuration elements illustrated in FIG. **5** according to instructions from the CPU **201** in response to a relay device program read from HD **204** and developed on the RAM **203**. The relay device **30** includes a storage unit **3000** built by the RAM **203** illustrated in FIG. **5** or the HD **204** illustrated in FIG. **5**, and the like.

(Functional Units of Relay Device)

Next, functional configurations of the relay device **30** will be described. Note that, hereinafter, in describing the function of the relay device **30**, a relation between the function and main elements for realizing the function of the relay device **30** from among the configuration elements illustrated in FIG. **5** will also be described.

The transmission/reception unit **31** of the relay device **30** illustrated in FIG. **6** is realized according to instructions from the CPU **201** and by the network I/F **209** illustrated in FIG. **5**. The transmission/reception unit **31** performs transmission/reception of various types of data (or information) to/from other terminal, device, or system via the communication network **2**. The relay device **32** is realized according to instructions from the CPU **201** illustrated in FIG. **5**. The relay device **32** relays content data transmitted/received between the terminals **10** in the content data session sed via the transmission/reception unit **31**. The storing/readout processing unit **39** is realized according to instructions from the CPU **201** and by the HDD **205** illustrated in FIG. **5**. The storing/readout processing unit **39** stores the various types of data in the storage unit **3000** and reads out the various types of data stored in the storage unit **3000**.

<Functional Configuration of Management System>

The management system **50** includes a transmission/reception unit **51**, a terminal authentication unit **52**, a state management unit **53**, a terminal extraction unit **54**, a state extraction unit **55**, a communication control determining unit **56**, a session management unit **57**, and a storing/readout processing unit **59**. These units are configured as the functions or means to function to be realized by operation of any one of the configuration elements illustrated in FIG. **5** according to instructions from the CPU **201** in response to a management system program read from the HD **204** and developed on the RAM **203**. Also, the management system **50** includes a storage unit **5000** built by the HD **204** illustrated in FIG. **5**.

(Relay Device Management Table)

A relay device management DB **5001** configured from a relay device management table illustrated in FIG. **8** is built in the storage unit **5000**. Note that FIG. **8**(*a*) shows a concept of a relay device management table managed in the management system **50***ab*, and FIG. **8**(*b*) shows a concept of a relay device management table managed in the management system **50***cd*. The own management system **50** can control the connection of each relay device **30**. The relay device ID of each relay device **30** and a password associated with each relay device ID are managed in the relay device management table. For example, a password for connecting to the relay device **30***a* identified by a relay device ID of "111a@jp.oo.com" is "xxxx" in the relay device management table illustrated in FIG. **8**(*a*). In the present embodiment, the relay device ID includes domain information (communication control information) for example "jp.oo-.com", which indicates that the management system **50** can control the start or termination of communication using the relay device **30** identified by the relay device ID. Note that, hereinafter, the relay device ID is referred to as simply "111a" by omitting the domain information of "jp.oo.com", if there are no explicit reasons.

(Terminal Authentication Management Table)

A terminal authentication management DB **5002** configured from a terminal authentication management table illustrated in FIG. **9** is built in the storage unit **5000**. Note that FIG. **9**(*a*) shows a concept of a terminal authentication management table managed in the management system **50***ab*, and FIG. **9**(*b*) shows a concept of a terminal authentication management table managed in the management system **50***cd*. The terminal ID assigned to all terminals **10** and a password associated with each terminal ID of all terminals **10** connected to the own management system **50** are managed in the terminal authentication management table. For example, the terminal ID of the terminal **10***aa* is "01aa@jp.oo.com", and the password is "aaaa" in the terminal authentication management table illustrated in FIG. **9**(*a*). In the present embodiment, the terminal ID includes domain information (terminal connection information) for example "jp.oo.com", which indicates that the terminal **10** identified by the terminal ID is connected with the management system **50**. Note that, hereinafter, the terminal ID is referred to as simply "01aa" by omitting the domain information of "jp.oo.com", if there are no explicit reasons.

(Terminal Management Table)

Further, a terminal management DB **5003** configured from a terminal management table as an example of a state management unit illustrated in FIG. **10** is built in the storage

unit **5000**. Note that FIG. **10**(*a*) is a conceptual diagram illustrating a terminal management table managed in the management system **50***ab*, and FIG. **10**(*b*) is a conceptual diagram illustrating a terminal management table managed in the management system **50***cd*. In the terminal management table, a destination name when the terminals **10** are destinations and the state information of the terminals **10** are associated with each other and managed for each terminal ID of the terminals **10**. For example, in the terminal management table illustrated in FIG. **10**, the terminal **10***aa* having the terminal ID of "01aa" has the destination name of "Tokyo office AA terminal" and the operating state of "None".

(Destination List Management Table)

A destination list management DB **5004** configured from a destination list management table illustrated in FIG. **11** is built in the storage unit **5000**. Note that FIG. **11**(*a*) shows a concept of a destination list management table managed in the management system **50***ab*, and FIG. **11**(*b*) shows a concept of a destination list management table managed in the management system **50***cd*. In this destination list management table, for terminal ID of terminal **10** submitting a request of the start of communication, all terminal IDs of the terminals **10** registered as the destination candidates capable of communication are associated with the terminal ID of the terminal **10** connected to the own management system **50**. For example, in the destination list management table illustrated in FIG. **11**(*a*), a destination candidate to which the start of communication in a television conference can be requested from the terminal **10***aa* as a requestor having the terminal ID of "01aa" is the terminal **10***ab* having the terminal ID of "01ab". Note that the destination list management table controls the terminal ID of the terminal **10** connected to other management system **50** as the terminal ID of the terminal **10** of the destination candidate. Consequently, for example, the terminal **10***aa* connected to the management system **50***ab* can select the terminal **10***db* connected to other management system **50***cd* as a destination. This destination candidate is updated by being added or deleted by a request of addition or deletion to the management system **50** from an arbitrary terminal **10**.

(Session Management Table)

A session management DB **5005** configured from a session management table illustrated in FIG. **12** is built in the storage unit **5000**. Note that FIG. **12**(*a*) shows a concept of a session management table managed in the management system **50***ab*, and FIG. **12**(*b*) shows a concept of a session management table managed in the management system **50***cd*. In the session management table, for each session ID for identifying a content data session sed between the terminals **10**, the relay device ID for identifying the relay device **30** to be used for relaying content data in the content data session sed, and the terminal ID for identifying the terminal **10** which is running communication in the content data session sed, are associated with each other and managed. Note that the session ID may be identification information, for example a meeting ID, a communication ID, and a telephone call ID, which identifies an event such as a meeting, communication, and a telephone call, which corresponds to the content data session sed. For example, in the session management table illustrated in FIG. **12**(*a*), the relay device **30***a* having the relay device ID of "111a" in the content data session sed identified by the session ID of "se01@jp.oo.com" relays content data between the terminals **10***ab* and **10***db*. In the present embodiment, the session ID includes domain information (communication control information) such as "jp.oo.com", which indicates the management system **50** that can control the start or termination of communication in the content data session sed identified by the session ID. Note that, when the session ID is described below, it is simply referred to as "se01" by omitting the domain information of "jp.oo.com", if there are no explicit reasons.

(State Change Management Table)

A state change management DB **5009** configured from a state change management table illustrated in FIG. **13** is built in the storage unit **5000**. Note that FIG. **13** shows a concept of a state change management table. In the state change management table of FIG. **13**(*a*), the management information transmitted from the terminal **10**, state information before change that indicates the state of the terminal **10** before change, and state information after change that indicates the state of the terminal **10** after change are associated with each other and managed. Note that, in the state change management table of FIG. **13**(*a*), management information of "Call" indicates that other terminal **10** requests participation to the session when the content data session sed is established between the terminals **10**. Also, management information of "Join" indicates that the terminal **10** requests the start of relay of content data. Management information of "Leave" indicates that the terminal **10** requests termination of communication.

If the state of not only a source terminal **10** of the management information but also the state a destination terminal **10** are changed, control based on the management information is performed using the state change management table of FIG. **13**(*b*). The state change management table of FIG. **13**(*b*) manages the terminal information that indicates a source or a destination of management information by associating with information listed in the state change management table of FIG. **13**(*a*). For example, when the management system **50** receives the management information of "Invite", the state of communication of the terminal **10** as the source of management information is changed from "None" to "Inviting", the state of communication of the terminal **10** as the destination is changed from "None" to "Invited". Note that the management information of "Invite" indicates that the terminal **10** requests the start of communication. The management information of "Ring" indicates that the terminal **10** rings a dial tone in response to the request of the start of communication. The management information of "Accept" indicates that the terminal **10** accepts the start of communication. The state information of "Inviting" indicates that the terminal is requesting the start of communication, and the state information of "Invited" indicates that the terminal is being requested the start of communication.

(Functional Configurations of Management System)

Next, functional configurations of the management system **50** will be described. Note that, hereinafter, in describing the functional configurations of the management system **50**, a relation between the functional configurations and principal configuration elements for realizing the functional configurations of the management system **50** from among the configuration elements illustrated in FIG. **5** will also be described.

The transmission/reception unit **51** may be a reception unit, a communication control unit, control request information transmission unit, a start information transmission unit, a state information before change reception unit, and/or a state information after change transmission unit. The transmission/reception unit **51** is realized according to instructions from the CPU **201** and by the network I/F **209** illustrated in FIG. **5**. The transmission/reception unit **51**

performs transmission/reception of various types of data (or information) to/from other terminal, device or system via the communication network **2**. The transmission/reception unit **51** receives a request of the start of communication by receiving the start request information from the terminal **10**. Control associated with the start of communication is executed by transmitting relay device connection information for connecting the relay device **30** to the terminal **10**. Also, the transmission/reception unit **51** transmits to other management system **50***cd* the control request information of requesting control associated with the start of communication between the terminals **10**. Also, the transmission/reception unit **51** transmits to the terminal **10** operating communication in the session the terminal ID of the terminal **10** to participate in the content data session sed and participation notification (the start information) including the session ID. Also, the transmission/reception unit **51** receives or transmits the state information after change that indicates the state of the terminal **10** after change.

The terminal authentication unit **52** is realized according to instructions from the CPU **201** illustrated in FIG. **5**. The terminal authentication unit **52** searches the terminal authentication management table (see FIG. **9**) of the storage unit **5000** using the terminal ID and the password as search keys included in the login request information received via the search key transmission/reception unit **51**, and performs terminal authentication by determining whether the same terminal ID and the password are managed in the terminal authentication management table.

The state management unit **53** is realized according to instructions from the CPU **201** illustrated in FIG. **5**. The state management unit **53** stores and manages the terminal ID of the requestor terminal, the state information indicating the operating state of the requestor terminal, and the IP address of the requestor terminal in the terminal management table (see FIG. **10**) in association with each other in order to control the operating state of the requestor terminal that has requested login. The state management unit **53** as an example of a first change processing unit changes the state information managed by the terminal management table when the operating state of the terminal **10** is changed based on control by the own management system **50**. The state management unit **53** as an example of a second change processing unit changes the state information managed by the terminal management table based on the state information after change transmitted from another management system **50** when the operating state of the terminal **10** is changed based on control by the another management system **50**.

The terminal extraction unit **54** is realized according to instructions from the CPU **201** illustrated in FIG. **5**. The terminal extraction unit **54** searches the destination list management table (see FIG. **11**) by using the terminal ID of the requestor terminal that has requested login as a key, and extract and reads out a terminal ID of a terminal **10** of a destination candidate. The terminal extraction unit **54** searches the destination management table by using the terminal ID of the requestor terminal that has requested login as a key, and extracts a terminal ID of another requestor terminal that registers the terminal ID of the requestor terminal as a candidate of the destination terminal.

The state extraction unit **55** is realized according to instructions from the CPU **201** illustrated in FIG. **5**. The state extraction unit **55** searches the terminal management table (see FIG. **10**) by using the terminal ID of the destination terminal candidate extracted by the terminal extraction unit **54** as a search key, and reads out the operating state for each terminal ID extracted by the terminal extraction unit **54**. Consequently, the state extraction unit **55** can extract the operating state of the destination terminal candidate capable of communicating with the requestor terminal that has requested login. In addition, the state extraction unit **55** searches the management table by using the terminal ID extracted by the terminal extraction unit **54** as a search key, and acquires the operating state of the requestor terminal that has requested login.

The communication control determining unit **56** is realized according to instructions from the CPU **201** illustrated in FIG. **5**. The communication control determining unit **56** determines whether control associated with the start of communication should be operated or not by the own management system **50** based on the domain information included in the relay device ID selected by the selection device **80**.

The session management unit **57** is realized according to instructions from the CPU **201** illustrated in FIG. **5**. The session management unit **57** generates a session ID for identifying a content data session sed every time when the content data session sed between the terminals **10** is newly established. The session management unit **57** stores in the session management table (see FIG. **12**), the session ID, the terminal ID for identifying the terminal **10** that operates communication in the session, and the relay device ID of the relay device **30** to be used in the session in the session management table (see FIG. **12**) in the manner that they are associated with each other.

The storing/readout processing unit **59** is realized according to instructions from the CPU **201** and by the HDD **205** illustrated in FIG. **5**. The storing/readout processing unit **59** performs processing of storing various types of data in the storage unit **5000** and reading out of the various types of data stored in the storage unit **5000**.

<Functional Configuration of Selection Device>

The selection device **80** includes a transmission/reception unit **81**, a selection unit **82**, and a storing/readout processing unit **89**. These units are configured as the functions or means to function to be realized by operation of any one of the configuration elements illustrated in FIG. **5** according to instructions from the CPU **201** in response to a management system program read from the HD **204** and developed on the RAM **203**. The selection device **80** includes a storage unit **8000** built by the HD **204** illustrated in FIG. **5**.

(Relay Device Selection Management Table)

A relay device selection management DB **8001** as an example of the communication control information management unit configured from the relay device management table illustrated in FIG. **14** is built in the storage unit **8000**. Note that FIG. **14** shows a concept of a relay device selection management table. A relay device ID for identifying the relay device **30** is assigned to all relay devices **30** that are candidates of selection, and managed using the relay device selection management table to select a relay device to be used to relay-information transmitted/received between the terminals **10**.

The relay device ID managed in the relay device selection management table includes the domain information (communication control information) such as "jp.oo.com", which indicates the management system **50** capable of executing control associated with the start of communication using the relay device **30** identified by the relay device ID. The priority information indicating the priority in selecting the relay device **30** identified by the relay device ID is managed in the relay device selection management table for each terminal ID. The relay device selection management table

illustrated in FIG. **14** illustrates that, in a case where the terminal **10***aa* identified by the terminal ID of "01aa" starts communication, the priority in selecting the relay device **30***a* identified by the relay device ID of "111a" is "3". Note that a numerical value of the priority in the relay device selection management table is determined so that larger a numerical value is, higher the priority is, based on a bandwidth between the terminal **10** and the relay device **30** and a relay time when information is transmitted/received between the terminal **10** and the relay device **30**, for example. Also, the priority may be calculated based on a time zone used by the terminal **10** and the management system **50**. In this case, the numerical value of the priority can be set larger if the time zone used by the terminal **10** is closer to the time zone used by the management system **50**.

(Functional Configurations of Selection Device)

Next, functional configurations of the selection device **80** will be described. Note that, hereinafter, in describing the functional configurations of the selection device **80**, a relation between the functional configurations and principal configuration elements for realizing the functional configurations of the selection device **80** among the configuration elements illustrated in FIG. **5** will be described.

The transmission/reception unit **81** is an example of a selection request information reception unit and an output unit and is realized according to instructions illustrated in FIG. **5** and by the network I/F **209** illustrated in FIG. **5**. The transmission/reception unit **81** performs transmission/reception of various types of data (or information) to/from other terminal, device, or system via the communication network **2**. Consequently, the transmission/reception unit **81** receives the selection request information indicating a request of selecting the relay device **30** and transmitted from the management system **50**. Also, the transmission/reception unit **81** outputs the relay device ID that identifies the relay device **30** selected by the selection device **80** by transmitting the relay device ID to the management system **50**.

The selection unit **82** may be an example of a relay device selection unit and a communication control information extraction unit, and selects at least one relay device **30** from a plurality of candidate relay devices **30** based on priority information managed in the relay device selection management table (see FIG. **14**). Also, the selection unit **82** extracts the domain information included in the relay device ID by selecting the relay device ID managed in the relay device selection management table.

The storing/readout processing unit **89** is realized according to instructions from the CPU **201** and by the HDD **205** illustrated in FIG. **5**. The storing/readout processing unit **89** performs storing of various types of data in the storage unit **8000** and reading out of the various types of data stored in the storage unit **8000**.

<<Processing and Operation of Embodiment>>

Next, a processing method in the transmission system **1** according to the embodiment will be described.

(Preparation Stage)

First, transmission/reception processing of management information in a preparation stage before the start of communication between the terminal **10***aa* and other terminals **10** will be described with reference to FIG. **15**. FIG. **15** shows a sequence of a preparation stage before the start of communication between terminals. Note that, in FIG. **15**, various types of management information are transmitted/received through the management information session sei illustrated in FIG. **2**.

First, when a user of the terminal **10***aa* turns ON the power supply switch **109** illustrated in FIG. **4**, the operation input reception unit **12** illustrated in FIG. **6** turns ON the power supply in response to the power supply ON (step S**21**). Then, the login request unit **13** automatically transmits login request information that indicates a login request to the management system **50***ab* via the communication network **2** from the transmission/reception unit **11** upon receiving the power supply ON (step S**22**). The login request information includes a terminal ID for identifying the requestor terminal **10***aa* and a password. These terminal ID and password are read out from the storage unit **1000** through the storing/readout processing unit **19** and are transmitted to the transmission/reception unit **11**.

Next, the terminal authentication unit **52** of the management system **50** searches the terminal authentication management table (see FIG. **9**) by using as a search key the terminal ID and the password included in the login request information received through the transmission/reception unit **51**, and performs terminal authentication by determining the same terminal ID and password are managed in the terminal authentication management table (step S**23**). Since the same terminal ID and password are managed by the terminal authentication unit **52**, when it is determined that the login request is given from the terminal **10** having valid use authority, the state management unit **53** stores the terminal ID of the terminal **10***aa* and the state information indicating the operating state in the terminal management table (see FIG. **10**) in the manner that they are associated with each other (step S**24**). Consequently, the state information of "None" and the terminal ID of "01aa" are associated with each other and managed in the terminal management table.

Then, the transmission/reception unit **51** of the management system **50** transmits authentication result information indicating an authentication result obtained by the terminal authentication unit **52** to the requestor terminal **10***aa* that has requested login via the communication network **2** (step S**25**). In the embodiment described below, it is assumed that the terminal is determined as the valid use authority by the terminal authentication unit **52**.

(State Management)

When the state of the terminal **10** is changed by control of communication based on the management information transmitted from the terminal **10**, the management system **50** that has executed the control manages the state after change and transmits the state to another management system **50**. The processing of this time will be described with reference to FIG. **16**. FIG. **16** shows a sequence of processing of informing a change of the state. Note that, in FIG. **16**, various types of management information are transmitted/received through the management information session sei illustrated in FIG. **2**.

When the state information of the terminal **10** managed in the terminal management table is changed (for example, step S**24**) by control of communication based on the management information (for example, step S**22**) transmitted from the terminal **10**, the terminal extraction unit **54** searches the destination list management table (see FIG. **11**) by using the terminal ID of the terminal **10** (here, "01aa"), the state information of which has been changed as a search key (step S**31**). Consequently, the terminal extraction unit **54** extracts the terminal ID by reading out the terminal IDs of "01ab, 01ba, 01ca, 01cb, and 01db" that is of the terminals capable of communicating with the terminal **10**, the state of which has been changed. Next, the transmission/reception unit **51** transmits the terminal ID of the terminal **10***aa* of "01aa" and the state information after change to the terminals (**10***ab* and **10***ba*) connected to the management system **50***ab*. Conse-

quently, the terminals (**10***ab* and **10***ba*) capable of communicating with the terminal **10***aa* can recognize the state of the terminal **10***aa*.

The transmission/reception unit **51** determines whether there is a destination candidate terminal connected to another management system **50** based on the domain information included in the extracted terminal ID (step S**33**). In a case where there is a destination candidate terminal connected to another management system **50** (YES at step S**33**), the transmission/reception unit **51** transmits the terminal ID of the terminal **10***aa* of "01aa", the destination name of "Tokyo office AA terminal", the state information after change, and the terminal IDs of the destination candidate terminals of "01ca, 01cb, and 01db" to the management system **50***cd* based on the domain information of "us.oo.com" included in the extracted terminal ID (step S**34**). Note that the management system **50***ab* may transmit, concerning the state information after change of the terminals (**10***aa*, **10***aa*, . . . , **10***ba*, **10***bb*, . . .), the state information after change to the management system **50***cd* only during a temporary period in which the terminals **10** are connected to the own management system **50***ab*. Consequently, the management system **50***cd* can, manage the states of the terminals (**10***aa*, **10***aa*, . . . , **10***ba*, **10***bb*, . . .) that are not directly connected to the own management system **50***cd* only during a temporary period, and therefore, the load to the management system **50***cd* can be reduced.

The state management unit **53** of the management system **50***cd* records the received terminal ID of "01aa", the destination name of "Tokyo office AA terminal", and the state information after change associated with each other in the terminal management table (see FIG. **10**(*b*)) (step S**35**). Consequently, the management system **50***cd* can recognize the state of the terminal **10***aa* capable of communicating with the terminals (**10***ca*, **10***cb*, and **10***db*) connected to the own management system **50***cd*. The terminal management table of the management system **50***cd* can manage the state of the terminal **10***aa* from the time when the management system **50***cd* receives the state information of "None" of the terminal **10***aa* to the time when the management system **50***cd* receives the state information of "Offline" of the terminal **10***aa* from the management system **50***ab*. Consequently, the terminal **10***aa* that is not directly connected to the management system **50***cd* can be managed only during a temporary period, and therefore the load to the management system **50***cd* can be reduced.

Subsequent to that, the transmission/reception unit **51** of the management system **50***cd* transmits the terminal ID of "01aa@jp.oo.com" and the state information after change of the terminal **10***aa* to the terminals (**10***ca*, **10***cb*, and **10***db*). Consequently, the terminals (**10***ca*, **10***cb*, and **10***db*) capable of communicating with the terminal **10***aa* can recognize the operating state of the terminal **10***aa*. In the terminal **10** that has received the state information after change, the destination list creation unit **20** displays a destination list box **1100-1** (see FIG. **7**) to the display **120**, in which the operating state of the terminal **10** is illustrated by an icon **1100-3***a* and the like based on the state information after change. Consequently, the user of the terminal **10** can recognize the operating state of the destination candidate terminal **10**. The destination list creation unit **20** displays an icon **1100-4** that indicates a region of the terminal **10** to the display **120** based on the domain information included in the received terminal ID. Consequently, the user of the terminal **10** can recognize the region of the destination candidate terminal **10**.

Note that, when the management system **10***cd* changes the state information of the terminal **10**, the processing of informing the state information after change to the management system **50***ab* is similar to the above-described processing from steps S**31** to S**36**, and therefore, description is omitted.

(Relay Device Selection Processing)

Next, processing of selecting a relay device **30** to be used to relay content data transmitted/received between the terminals **10** before starting communication between the terminals **10***aa* and **10***db* will be described with reference to FIG. **17**. FIG. **17** shows is a sequence of processing of selecting a relay device. Note that, in FIG. **17**, various types of management information are transmitted/received by the management information session sei illustrated in FIG. **2**. Also, in the present embodiment, the terminal **10***aa* can request the start of communication by selecting at least one terminal having the operating state of online from between the destination candidate terminals **10**.

First, the user of the terminal **10***aa* presses the operation button **108** illustrated in FIG. **3** to select the destination candidate terminal **10***db*, so that the operation input reception unit **12** illustrated in FIG. **6** receives the request of the start of communication (step S**41**). The transmission/reception unit **11** of the terminal **10***aa* transmits, to the management system **50***ab*, the start request information of "Invite" that indicates the request of the start of communication, and that includes the terminal ID of the terminal **10***aa* of "01aa", which indicates the requestor of the start of communication, and the terminal ID of the terminal **10***db* of "01db", which indicates the destination (step S**42**). The transmission/reception unit **51** of the management system **50***ab* receives the request of the start of communication of the terminal **10***aa* and the terminal **10***db* by receiving the start request information. Next, the transmission/reception unit **51** transmits to the selection device **80** the selection request information that indicates a request of selecting the relay device **30** to be used to relay content data transmitted/received between the terminal **10***aa* and the terminal **10***db*, and that includes the terminal ID of the terminal **10***aa* of "01aa" and the terminal ID of the terminal **10***db* of "01db" (step S**43**).

The transmission/reception unit **81** of the selection device **80** receives the request of selection of the relay device **30** by receiving the selection request information. Next, the selection unit **82** selects at least one relay device **30** to be used to relay the content data transmitted/received between the terminal **10***aa* and the terminal **10***db* from among the relay devices **30** managed in the relay device selection management table (see FIG. **14**) (step S**44**). The processing of selecting the relay device **30** will be described with reference to FIG. **18**. FIG. **18** shows a flowchart of the processing of selecting a relay device.

First, the selection unit **82** extracts the priority associated with the terminal ID of the requestor terminal **10***aa* of "01aa" and the priority associated with the terminal ID of the destination terminal **10***db* of "01db" for each relay device ID managed in the relay device selection management table (see FIG. **14**) (step S**44-1**). Subsequent to that, the selection unit **82** calculates the sum of the numerical number of the priority for each relay device ID and selects the relay device ID of which the sum of the numerical number of the priority, is the largest (step S**44-2**). In the present embodiment, the sum of the numerical number of the priority corresponding to the relay device ID of "111a" and the sum of the numerical number of the priority corresponding to the relay device ID of "111d" are "5" that is the same value. In such a case, the selection unit **82** can arbitrarily select a relay

device ID from among the relay device IDs that have the largest sum of the numerical number of the priority in a random or a round robin manner. Note that the selection unit **82** extracts the domain information included in the relay device ID by selecting the relay device ID managed in the relay device selection management table (step S**44-3**).

When the selection of the relay device **30** is completed, the transmission/reception unit **81** of the selection device **80** outputs selection information that indicates a result of the selection, and that includes the relay device ID identifying the selected relay device, the terminal ID of the terminal **10***aa* of "01aa", and the terminal ID of the terminal **10***db* of "01db", by transmitting the selection information to the management system **50***ab* (step S**45**).

The transmission/reception unit **51** of the management system **50***ab* receives the selection result of the relay device **30** by receiving the selection information. Subsequent to that, the communication control determining unit **56** determines whether control associated with the start of communication between the terminals **10** is executed or not using the selected relay device **30** based on the domain information included in the relay device ID of the selection information (step S**46**). The communication control determining unit **56** of the management system **50***ab* determines that the control is executed if the domain information is "jp.oo.com" that indicates the management system **50***ab*, and determines that the control is not executed if the domain information is not "jp.oo.com." Note that, in the present embodiment, the domain information included in the relay device ID indicates the management system **50** capable of executing control associated with the start of communication. Therefore, in the processing at step S**46**, when the control is possible, the control is determined to be executed, while when the control is not possible, the control is determined not to be executed. When the control associated with the start of communication is determined not to be executed (NO at step S**46**), the transmission/reception unit **51** transmits to the management system **50***cd* communication control request information of requesting the control associated with the start of communication based on the domain information of "us.oo.com" (step S**47**). The communication control request information includes the start request information transmitted from the terminal **10***aa* (see step S**42**) and the content of the selection information transmitted from the selection device **80** (see step S**45**).

(Communication Start Processing)

Next, subsequent to processing when the selected relay device **30** is the relay device **30***a* and the control associated with the start of communication is determined to be executed by the management system **50***ab* (YES at step S**46**) will be described with reference to FIG. **19**. FIG. **19** shows a sequence of processing of requesting the start of communication. Note that, in FIG. **19**, various types of management information are transmitted/received through the management information session sei illustrated in FIG. **2**.

First, the state management unit **53** changes the state information of the source terminal **10***aa* and the destination terminal **10***db* of the start request information managed in the terminal management table (FIG. **10**(*a*)) based on the start request information of "Invite" (see step S**42**) transmitted from the terminal **10***aa* (step S**51**). Here, processing at step S**51** will be described with reference to FIGS. **20** and **21**. FIG. **20** is a state transition diagram illustrating a transition of a terminal. FIG. **21** is a flowchart illustrating processing of changing the state of the terminal.

In the present embodiment, the state management unit **53** changes the state of the terminal **10** in accordance with a rule of change of the state illustrated in the state transition diagram of FIG. **20**. For example, when the start request information of "Invite" is received from the terminal **10**, the state information of the terminal **10** of "None" is changed into the state information of "Inviting" or into the state information of "Invited." Note that, when other management information, such as "Ring, Accept, Join, and Leave", other than "Invite", is transmitted from the terminal **10**, the state management unit **53** changes the state of the terminal **10** in accordance with the rule of change of the state illustrated in the state transition diagram of FIG. **20**. However, detailed description is omitted. In the present embodiment, an example of using the state change management table (see FIG. **13**) is described in order to realize the change of the state by the state management unit **53**. However, the method is not limited to the example using the state change management table as long as the state is changed in accordance with the rule illustrated in FIG. **20**.

First, the state management unit **53** acquires the state information of "None", which is of terminal **10***aa* as the source of the start request information, and the state information of "None", which is of the destination terminal **10***db* as the destination, from the terminal management table (see FIG. **10**(*a*)) (step S**51-1**). Next, the state management unit **53** acquires the state information before change of "None", which is of the source and destination terminals **10** corresponding to the start request information of "Invite" as the management information (step S**51-2**). Next, the state management unit **53** compares the state information acquired from the terminal management table and the state information before change acquired from the state change management table (see FIG. **13**) for the source terminal **10***aa* and the destination terminal **10***db* respectively, and determines whether these pieces of information are the same or not (step S**51-3**).

When these pieces of information are determined to be the same (YES at step S**51-3**), the state management unit **53** acquires the state information after change of "inviting", which is of the source of the change request information of "Invite", and the state information after change of "Invited", which is of the destination of the change request information of "Invite" (step S**51-4**). Next, the state management unit **53** changes the state information associated with the terminal ID of the source terminal **10***aa* of "01aa" into "Inviting" based on the acquired state information after change in the terminal management table (see FIG. **10**(*a*)) (step S**51-5**). Similarly, the state management unit **53** changes the state information associated with the terminal ID of the destination terminal **10***db* of "01db" into "Invited" based on the acquired state information after change in the terminal management table.

Note that, when the State information of the terminals (**10***aa* and **10***db*) is changed (see step S**51-5**), the state information ("Inviting" and "Invited") that indicates the states of the changed terminals (**10***aa* and **10***db*) are informed to the respective destination terminals **10** based on the processing from steps S**31** to S**36**.

When the information is determined not to be the same in step S**51-3**, it is considered that any terminal **10** is not in the state of starting communication, and therefore, the state management unit **53** does not execute the processing of changing the states of the terminals **10**. In this case, the transmission/reception unit **51** transmits an error message to the terminal **10***aa* and terminates the processing (step S**51-6**).

When the processing of changing the state information of the terminal **10** is completed, the session management unit

57 generates the session ID of "se01@jp.oo.com" for identifying the content data session sed for executing communication between the terminal **10***aa* and the terminal **10***db* (step S**52**). Note that, in the present embodiment, since it is determined that the control associated with the start of communication is executed by the management system **50***ab* (see step S**46**), the session ID is generated including the domain information of "jp.oo.com" that indicates the management system **50***ab*. The session management unit **57** stores in the session management table (see FIG. **12**) the generated session ID, the relay device ID of the selected relay device **30***a* of "111a", and the terminal IDs of the terminals (**10***aa* and **10***db*) of "01aa and 01db", between which communication starts, in the manner that they are associated with each other.

Next, the transmission/reception unit **51** of the management system **50***ab* transmits the start request information of "Invite" and the session ID of "se01" transmitted from the terminal **10***aa* through the management system **50***cd* at step S**42** to the terminal **10***db* (steps S**53-1** and S**53-2**). Note that, in the present embodiment, since the terminal ID includes the domain information, the transmission/reception unit **11** can select directly to transmit the information to the terminal **10** or to transmit the information through another management system **50** to the terminal **10**, based on the domain information included in the terminal ID. The start request information includes the terminal ID of "01aa", which is of the terminal **10***aa* as the source of the start request information, and the terminal ID of "01db", which is of the terminal **10***db* as the destination. At this time, the transmission/reception unit **51** of the management system **50***ab* transmits the relay device connection information for connecting the selected relay device **30***a* to the terminal **10***db* through the management system **50***cd*. The relay device connection information includes the relay device ID of the relay device **30***a* of "111a" and the password of "xxxx" for connecting to the relay device **30***a* and managed in the relay device management table (see FIG. **8**(*a*)).

The transmission/reception, unit **11** of the terminal **10***db* receives a request of the start of communication from the terminal **10***aa* by receiving the start request information. The transmission/reception unit. **11** of the terminal **10***db* transmits to the management system **50***ab* through the management system **50***cd* upon receiving the start request information, the calling information of "Ring" that indicates that the request of the start of communication has been received and for ringing a dial tone at the terminal **10***aa* (steps S**54-1** and S**54-3**). The calling information includes the terminal ID of "01db", which is of the terminal **10***db* as the source of the calling information, the terminal ID of "01aa", which is of the terminal **10***aa* as the destination, and the session ID of "se01@jp.oo.com." Note that the calling information transmitted at step S**54-1** is received by the transmission/reception unit **51** of the management system **50***cd*. In this case, the communication control determining unit **56** of the management system **50***cd* determines that control of calling associated with the start of communication is not executed by the management system **50***cd* based on the domain information of "jp.oo.com" included in the session ID of the calling information (step S**54-2**). Consequently, the transmission/reception unit **51** of the management system **50***cd* transfers the calling information to the management system **50***ab* indicated by the domain information of "jp.oo.com." Similarly, in the management system **50***ab* that has received the calling information, the communication control determining unit **56** determines whether the control of calling associated with the start of communication is executed by the management system **50***ab* based on the domain information of "jp.oo.com" included in the sessions ID (step S**54-4**). Consequently, the transmission/reception unit **51** of the management system **50***ab* receives a request of ringing the dial tone at the terminal **10***aa*.

Next, the state management unit **53** of the management system **50***ab* changes the state information of the terminal **10***aa* managed in the terminal management table (FIG. **10**(*a*)) into "Calling" and the state information of the terminal **10***db* into the "Ringing" based on the calling information of "Ring" transmitted from the terminal **10***db* (step S**55**). Note that the processing of changing the state information of the terminals (**10***aa* and **10***db*) is similar to the processing at step S**51**, and therefore, detailed description is omitted. The processing of transmitting the state information after change of the changed terminals (**10***aa* and **10***db*) to the terminal **10** capable of communicating with the terminals (**10***aa* and **10***db*) is the same as the processing in steps S**31** to S**36**, and therefore, detailed description is omitted. However, in searching the destination list management table (see FIG. **11**(*a*)) by using the terminal ID of "01db" as a search key at step S**31**, the terminal ID of the requestor is extracted as the terminal ID of the communication-capable terminal.

Next, the management system **50***ab* transmits the calling information of "Ring" transmitted from the terminal **10***db* to the terminal **10***aa* (step S**56**). The calling information includes the terminal. ID of "01db", which is of the terminal **10***db* as the source of the calling information, the terminal ID of "01aa", which is of the terminal **10***aa* as the destination, and the session ID. Also, at this time, the transmission/reception unit **51** of the management system **50***ab* transmits the relay device connection information for connecting to the relay device **30***a* to the terminal **10***db*. The relay device connection information includes the relay device ID of the relay device **30***a* of "111a" and the password of "xxxx" for connecting with the relay device **30***a* and managed in the relay device management table (see FIG. **8**(*a*)).

The transmission/reception unit **11** of the terminal **10***aa* receives a request of ringing a dial tone in the terminal **10***aa* by receiving the calling information. Consequently, the audio output unit **15***b* of the terminal **10***aa* can ring the dial tone from the speaker **115**. Note that, in the present embodiment, the management system **50***ab* starts control of connection between the terminals **10** when the operating state of the destination terminal **10***db* is "None" (step S**51**). However, after the state of the terminal **10***db* is changed in the management system **50***cd* until the changed state is transmitted to the management system **50***ab*, a time lag may occur therebetween. In this case, it may be difficult for the management system **50***ab* to recognize the state of the terminal **10***db* in temporally accurate manner. In such a case, when the terminal **10***db* cannot receive the start request information, the management system **50***ab* may transmit the start request information. Therefore, in the present embodiment, the management system **50***ab* controls connection between the terminal **10** after recognizing the fact that the terminal **10***db* has received the start request information by receiving the calling information.

Meanwhile, in the terminal **10***db* that has transmitted the calling information, the audio output unit **15***b* rings a ringtone from the speaker **115**. Consequently, the user of the terminal **10***db* gets to know the request of the start of communication from the terminal **10***aa*. Simultaneously, the operation button **108** of the terminal **10***db* receives acceptance of the start of communication with the terminal **10***aa* (step S**57**). When the acceptance of the start of communication is received, the start accept information of "Accept"

that indicates the acceptance of the start of communication is transmitted to the management system **50***ab* through the management system **50***cd* (step S**58-1**, S**58-3**). The start accept information includes the terminal ID of "01db", which is of the terminal **10***db* as the source of the start accept information, the terminal ID of "01aa", which is of the terminal **10***aa* as the destination, and the session ID of "se01@jp.oo.com." In this case, each communication control determining unit **56** of the management systems (**50***cd* and **50***ab*) determines whether the control associated with the start of communication is executed by the own management system **50** in a similar manner to the processing of steps S**54-2** and S**54-4** or not (steps S**58-2** and S**58-4**). Consequently, the transmission/reception unit **51** of the management system **50***ab* receives the acceptance of the start by the terminal **10***db*.

Next, the state management unit **53** of the management system **50***ab* respectively changes the state information of the terminal **10***aa* managed in the terminal management table (FIG. **10**(*a*)) and the state information of the terminal **10***db* into "Accepted" based on the start accept information of "Accept" transmitted from the terminal **10***db* (step S**59**). Note that the processing of changing the state information of the terminal **10** is similar to the processing at step S**51**, and therefore, detailed description is omitted.

Next, the management system **50***ab* transmits the start accept information of "Accept" transmitted from the terminal **10***db* to the terminal **10***aa* (step S**60**). The start accept information includes the terminal ID of "01db", which is of the terminal **10***db* as the source of the start accept information, the terminal ID of "01aa", which is of the terminal **10***aa* as the destination, and the session ID.

Next, processing for starting the content data session sed between the terminals (**10***aa* and **10***db*) using the relay device **30***a* after the request of the start of communication is accepted will be described with reference to FIG. **22**. FIG. **22** shows a sequence of the processing for starting communication between terminals. Note that, in the communication between the terminal **10** and the management system **50** illustrated in FIG. **22**, various types of management information are transmitted/received through the management information session sei illustrated in FIG. **2**.

First, the terminal **10***aa* is connected to the relay device **30***a* based on the relay device connection information received at step S**56** (step S**61-1**). Subsequent to that, the transmission/reception unit **11** of the terminal **10***aa* transmits the relay request information of "Join" that indicates a request of the start of relay to the management system **50***ab* (step S**62-1**). The relay request information includes the terminal ID of the terminal **10***aa* of "01aa" and the session ID of "se01@jp.oo.com." The communication control determining unit **56** of the management system **50***ab* determines that the control of the relay request associated with the start of communication is executed by the management system **50***ab* based on the domain information of "jp.oo.com" included in the session ID of the relay request information (step S**62-1-2**). Consequently, the transmission/reception unit **51** of the management system **50***ab* receives a request of the start of relay by the terminal **10***aa*.

Next, the state management unit **53** of the management system **50***ab* changes the state information of the terminal **10***aa* managed in the terminal management table (FIG. **10**(*a*)) into "Busy" based on the relay request information of "Join" transmitted from the terminal **10***aa* (step S**63-1**). Note that the processing of changing the state information of the terminal **10** is similar to the processing at step S**51**, and therefore, detailed description is omitted.

Next, the transmission/reception unit **51** of the management system **50***ab* transmits the relay request information including the terminal ID of the terminal **10***aa* of "01aa" and the session ID of "se01" to the relay device **30***a* (step S**64-1**). Upon receiving the relay request information, the transmission/reception unit **31** of the relay device **30***a* transmits the relay accept information that includes the terminal ID of the terminal **10***aa* of "01aa" and the session ID of "se01", and that indicates acceptance of the start of relay to the management system **50***ab* (step S**65-1**). The transmission/reception unit **51** of the management system **50***ab* transmits the received relay accept information to the terminal **10***aa* (step S**66-1**). Consequently, the content data session sed between the terminal **10***aa* and the relay device **30***a* is established.

Meanwhile, the terminal **10***db* connects to the relay device **30***a* based on the relay device connection information received at step S**56** (step S**61-2**). Subsequent to that, the transmission/reception unit **11** of the terminal **10***db* transmits the relay request information of "Join" that indicates a request of the start of relay to the management system **50***ab* through the management system **50***cd* (steps S**62-2-1** and S**62-2-3**). The relay request information includes the terminal ID of the terminal **10***db* of "01db" and the session ID of "se01@jp.oo.com." In this case, each communication control determining unit **56** of the management systems (**50***db* and **50***ab*) determines whether the control associated with the start of communication is executed by the own management system **50** in a similar manner to the processing of steps S**54-2** and S**54-4** or not (steps S**62-2-2** and S**62-2-4**). Consequently, the transmission/reception unit **51** of the management system **50***ab* receives a request of the start of relay by the terminal **10***aa*.

Next, the state management unit **53** of the management system **50***ab* changes the state information of the terminal **10***db* managed in the terminal management table (FIG. **10**(*a*)) into "Busy" based on the relay request information of "Join" transmitted from the terminal **10***db* (step S**63-2**). Note that the processing of changing the state information of the terminal **10** is similar to the processing at step S**51**, and therefore, detailed description is omitted.

Subsequent to that, the transmission/reception unit **51** of the management system **50***ab* transmits the relay request information including the terminal ID of the terminal **10***db* of "01db" and the session ID of "se01" to the relay device **30***a* (step S**64-2**). Upon receiving the relay request information, the relay device **30***a* transmits to the management system **50***ab* the relay accept information that indicates acceptance of the start of relay and includes the terminal ID of the terminal **10***db* of "01db" and the session ID of "se01" (step S**65-2**). The transmission/reception unit **51** of the management system **50***ab* transmits the received relay accept information to the terminal **10***db* through the management system **50***cd* (steps S**66-2-1** and S**66-2-2**). Consequently, the content data session sed between the terminal **10***db* and the relay device **30***a* is established. When the content data session sed is established, the relay device **30***a* relays the content data that includes image data and audio data transmitted from one terminal (**10***aa* or **10***db*) to the other terminal, so that a television conference can be started.

(Participation)

Next, processing of executing communication among three terminals **10** by terminal **10***cb* participating in the content data session sed after the content data session sed is established between the terminal **10***aa* and the terminal **10***db* will be described with reference to FIG. **23**. Note that FIG. **23** shows a sequence of processing for starting communication among three terminals. Note that, in the communi-

cation between the terminal **10** and the management system **50** illustrated in FIG. **23**, various types of management information are transmitted/received through the management information session sei.

First, the user of the terminal **10***aa* under communication with the terminal **10***db* presses the operation button **108** illustrated in FIG. **3**, so that the operation input reception unit **12** receives a request of inviting the terminal **10***cb* to the session under communication (step S**71**). Next, the transmission/reception unit **11** of the terminal **10***aa* transmit to the management system **50***ab* the session invitation information that indicates invitation to the session, and that includes the terminal ID of the terminal **10***aa* of "01aa", the terminal ID of the terminal **10***cb* of "01cb", and the session ID of "se01" (step S**72**). Note that the session ID may be identification information, for example a meeting ID, a communication ID, and a telephone call ID, which identifies an event, for example a meeting, communication, and a telephone call, corresponding to the content data session sed. The transmission/reception unit **51** of the management system **50***ab* transmits the received session invitation information to the terminal **10***cb* through the management system **50***cd* (steps S**73-1** and S**73-2**).

The transmission/reception unit **11** of the terminal **10***cb* transmits to the management system **50***ab* through the management system **50***cd* in response to the invitation, the participation request information of "Call" that indicates a request of participation to the session (steps S**74-1** and S**74-3**). The participation request information includes the terminal ID of "01cb", which is of the terminal **10***cb* that requests participation to the session, and the session ID of "se01@jp.oo.com." In this case, each communication control determining unit **56** of the management systems (**50***db* and **50***ab*) determines whether the control associated with the start of communication is executed by the own management system **50** in the similar manner to the processing of steps S**54-2** and S**54-4** or not (steps S**74-2** and S**74-4**). Consequently, the transmission/reception unit **51** of the management system **50***ab* can receive the request of participation to the content data session sed from the terminal **10***cb*.

Next, the state management unit **53** of the management system **50***ab* changes the state information of the terminal **10***cb* managed in the terminal management table (FIG. **10**(*a*)) into "Accepted" based on the participation request information of "Call" transmitted from the terminal **10***cb* (step S**75**). Note that the processing of changing the state information of the terminal **10** is similar to the processing at step S**51**, and therefore, detailed description is omitted.

Next, the session management unit **57** adds the terminal ID of "01cb", which is of the terminal **10***cb* that requests participation, to a field part of the destination terminal of a record including the session ID of "se01" in the session management table (see FIG. **12**) (step S**76**). Next, the transmission/reception unit **51** of the management system **50***ab* transmits the terminal ID of "01cb", which is of the terminal **10***cb* that participates in the content data session sed, and the participation notice that includes the session ID of "se01" to the terminal **10***aa* and the terminal **10***db* that are executing communication in the session (steps S**77-1**, S**77-2-1**, and S**77-2-2**). Consequently, the terminal **10***aa* and the terminal **10***db* can recognize the terminal **10***cb* participates in the content data session sed.

Further, the transmission/reception unit **51** of the management system **50***ab* transmits the relay device connection information for connecting with the relay device **30***a* that relays content data in this session to the terminal **10***cb* through the management system **50***cd*. The relay device connection information includes the relay device ID of the relay device **30***a* of "111a" and the password of "xxxx" for connecting to the relay device **30***a* managed in the relay device management table (see FIG. **8**(*a*)) (steps S**78-1** and S**78-2**).

Subsequent to that, the content data session sed between the terminal **10***cb* and the relay device **30***a* is established by similar processing to steps S**61-2** to S**66-2-2** (steps S**79** to S**84-2**). When the session is established, the relay device **30***a* can relay content data from among the terminals (**10***aa*, **10***cb*, and **10***db*). Consequently, the terminals (**10***aa*, **10***cb*, and **10***db*) can start a television conference.

(Termination)

Next, processing of terminating communication by the terminal **10***db* to leave the content data session sed after the content data session sed is established among the terminals (**10***aa*, **10***ab*, and **10***db*) will be described with reference to FIG. **24**. FIG. **24** shows a sequence of processing of terminating communication. Note that FIG. **24** illustrates processing of transmitting/receiving various types of management information through the management information session sei.

First, the user of the terminal **10***db* presses the operation button **108** illustrated in FIG. **4**, so that a request of terminating communication is received (step S**91**). Then, the transmission/reception unit **11** of the terminal **10***db* transmits the termination request information of "Leave" including the terminal ID of the terminal **10***db* of "01db" and the session ID of "se01@jp.oo.com", which identifies the content data session sed used in the communication, to the management system **50***ab* through the management system **50***cd* (steps S**92-1** and S**92-3**). In this case, each communication control determining unit **56** of the management systems (**50***db* and **50***ab*) determines whether the control associated with termination of communication is executed in the own management system **50** in a similar manner to the processing of steps S**54-2** and S**54-4** or not (step S**92-2**, S**92-4**). Consequently, the transmission/reception unit **51** of the management system **50***ab* can receive the request of termination from the terminal **10***db*.

Subsequent to that, the state management unit **53** of the management system **50***ab* changes the state information of the terminal **10***db* managed in the terminal management table (FIG. **10**(*a*)) into "None" based on the participation request information of "Leave" transmitted from the terminal **10***db* (step S**93**). Note that the processing of changing the state information of the terminal **10** is similar to the processing at step S**51**, and therefore, detailed description is omitted.

Next, the session management unit **57** deletes the terminal ID of the terminal **10***db* of "01db" from the field part of the terminal ID of the record including the session ID of "se01" in the session management table (see FIG. **12**) (step S**94**). The transmission/reception unit **51** transmits the relay termination information that includes the terminal ID of the terminal **10***db* of "01db" and the session ID of "se01" and that indicates termination of relay to the relay device **30***a* (step S**95**). Next, the relay device **30***a* transmits the relay termination accept information that includes the terminal ID of "01db" and the session ID of "se01" and that indicates acceptance of termination of relay to the management system **50***ab* (step S**96**). Accordingly, the relay device **30***a* can stop the relay of the content data transmitted from the terminal **10***db* to the terminals (**10***aa* and **10***ab*) and the relay of the content data transmitted from the terminals (**10***aa* and **10***ab*) to the terminal **10***db* (step S**96**). Consequently, the

terminal **10***db* can terminate the communication between the terminals (**10***aa* and **10***db*) and leave the content data session sed.

<<Supplement of Embodiment>>

The management system **50**, the selection device **80**, and the program providing system **90** in the above-described embodiment may be implemented by a single computer, or may be implemented by a plurality of computers to which units (functions or means) are arbitrarily divided and allocated. Also, when the program providing system **90** is implemented by a single computer, the program may be transmitted by the program providing system **90** with divided into a plurality of modules, or may be transmitted by the program providing system **90** without divided. When the program providing system **90** is implemented by the plurality of computers, the program may be transmitted from each computer that transmits a part of the plurality of modules.

In the above-described embodiment, an example has been illustrated in which there is one selection device **80**. However, the transmission system may have a plurality of selection devices **80** that have similar function. In this case, each selection device **80** can be provided in the same region as each management system **50**, for example. In addition, each function of the selection device **80** may be realized with the management system **50** by reading the selection device program being installed into the management system **50**. Note that, in this case, a relay device selection management DB implemented by the relay device selection management table illustrated in FIG. **14** is built in the storage unit **500** of the management system **50**.

When the selection device program, the terminal program, the relay device program, and/or the transmission management program are provided to the user as a program product inside and/or outside the country, any type of a recording medium in which these programs are stored, the HD **204** in which these programs are stored, and the program providing system **90** provided with the HD **204** may be used.

In the above-described embodiment, a fully qualified domain name (FQDN) may be managed as the domain information. In this case, an IP address corresponding to the FQDN is obtained by a known domain name system (DNS) server. Note that the IDs, such as the terminal ID and the relay device ID, may be expressed such that "relay device connection destination information that indicates a connection destination to the relay device **30** in the communication network **2**", "relay device destination information that indicates a destination to the relay device **30** in the communication network **2**", "terminal connection destination information that indicates a connection destination to the terminal **10** in the communication network **2**", and "terminal destination information that indicates a destination to the terminal **10** in the communication network **2**."

The "television conference" is used as a term replaceable with "video conference" in the embodiment. Also, although a case of a television conference system has been described as an example of the transmission system **1** in the above-described embodiment, the inventions not limited to the embodiment. An internet telephone, for example internet protocol (IP) telephone or a telephone system, may be within a scope of the invention. The transmission system **1** may be a car navigation system. In this case, for example, one terminal **10** corresponds to a car navigation device mounted on an automobile, and the other terminal **10** corresponds to a management terminal of a management center that manages the car navigation, a management server, or to a car navigation device mounted on another automobile. The transmission system **1** may be an audio teleconference, or a personal computer (PC) screen sharing system.

The transmission system **1** may be a communication system of mobile phone device. In this case, the terminal corresponds to a mobile phone device, for example. A display example, of a destination list in this case is illustrated in FIG. **25**. FIG. **25** shows a concept of a destination list of another embodiment. That is, a terminal **310** as the mobile phone device includes a main body **310-1** of the mobile phone device, a menu screen display button **310-2** provided in the main body **310-1**, a display unit **310-3** provided in the main body **310-1**, a microphone **310-4** provided in a lower portion of the main body **310-1**, and a speaker **310-5** provided in the main body **310-1**. Among them, the "menu screen display button" **310-2** is a button for displaying a menu screen on which icons that indicate various applications are displayed. The display unit **310-3** may be a touch panel. The user can communicate with another mobile phone device by selecting a destination name on the touch panel of his/her own mobile phone device.

Although, in the above-described embodiment, a case of conducting a television conference by the transmission system **1** has been described, the invention is not limited to the embodiment. The invention may be applied to a system of a meeting or a general conversation among families and friends, or may be applied to one-way information providing system.

<<Principal Effect of Embodiment>>

As described above, according to the present embodiment, when the state of the terminal **10** has been changed in accordance with control by the management system **50***ab*, the management system **50***cd* receives the state information after change of the terminal **10** from the management system **50***ab*. Consequently, even if the control has been executed by the management system **50***ab*, the management system **50***cd* can advantageously manage the state of the terminal **10**.

Furthermore, according to the present embodiment, when the state of the terminal **10** has been changed in accordance with control by the management system **50***cd*, the management system **50***cd* transmits the state information after change of the terminal **10** to the management system **50***ab*. Consequently, even if the control has been executed by the management system **50***cd*, the management system **50***ab* can advantageously control the state of the terminal **10**.

Furthermore, according to the present embodiment, when the state of the terminal **10** has been changed by control by the management system **50**, the management system **50** transmits the state information after change of the terminal **10** to another management system **50** associated to another terminal capable of communicating with the terminal **10**. Consequently, the other management system **50** can advantageously manage the state of the terminal **10** that is a destination candidate of the other terminal.

Furthermore, according to the present embodiment, the terminal management table of the management system **50***cd* can advantageously manage the state of the terminal **10***aa* during a period from when receiving the state information of the terminal **10***aa* of "None" to when receiving the state information of the terminal **10***aa* of "Offline" from the management system **50***ab*. Consequently, the state of the terminal **10***aa* that is not directly connected to the management system **50***cd* can be controlled only during a temporary period. Therefore, the load of the management system **50***cd* can be reduced.

The invention claimed is:

1. A transmission management system comprising:

circuitry configured to

manage state information indicating a state of a transmission terminal,

execute control associated with communication of the transmission terminal,

change the state information being managed by the circuitry into state information indicating a changed state, in response to the control being executed by the circuitry,

receive state information after change indicating the changed state, in response to the control being executed by an other transmission management system, from the other transmission management system,

transmit, to the other transmission management system, the state information indicating the changed state, in response to the control being executed by the circuitry,

transmit, to another second transmission terminal that is capable of communicating with the transmission terminal and that is directly connected to the transmission management system, the state information indicating the changed state, and

change the state information managed by the circuitry based on the state information after change received by the circuitry.

2. A transmission system comprising:

the transmission management system set forth in claim 1;

the other transmission management system; and

the transmission terminal.

3. The transmission system set forth in claim 2,

wherein the transmission terminal is configured to communicate with another third transmission terminal associated with the other transmission management system.

4. The transmission system set forth in claim 2,

wherein the transmission terminal connects to the other transmission management system, and

the circuitry manages the state information after change during a period when the transmission terminal connects to the other transmission management system.

5. The transmission management system set forth in claim 1, wherein

the circuitry manages, in an associated manner, identification information of a transmission terminal as a requester terminal submitting a request of start of communication and identification information of a transmission terminal as a destination terminal to which the start of communication is requested, the identification information including domain information, and

the circuitry transmits, to another transmission management system corresponding to the domain information of the destination terminal, the state information indicating the changed state.

6. A computer a program product comprising a non-transitory computer-readable medium comprising a program of causing a transmission management system to execute a method, the method comprising:

first changing state information managed by the transmission management system to state information indicating a changed state, in response to control, which is associated with communication of a transmission terminal, being executed by the transmission management system;

receiving state information after change indicating a changed state, in response to the control being executed by an other transmission management system, from the other transmission management system;

transmitting, to the other transmission management system, the state information indicating the changed state, in response to the control being executed by the transmission management system;

transmitting, to another second transmission terminal that is capable of communicating with the transmission terminal and that is directly connected to the transmission management system, the state information indicating the changed state; and

secondly changing the state information managed by the transmission management system based on the state information after change received by the receiving.

7. The computer program product set forth in claim 6, further comprising:

managing, in an associated manner, identification information of a transmission terminal as a requester terminal submitting a request of start of communication and identification information of a transmission terminal as a destination terminal to which the start of communication is requested, the identification information including domain information; and

transmitting, to another transmission management system corresponding to the domain information of the destination terminal, the state information indicating the changed state.

8. A method for a transmission management system, the method comprising:

executing control associated with communication of the transmission terminal;

first changing state information managed by the transmission management system to state information indicating a changed state, in response to control, which is associated with communication of a transmission terminal, being executed by the transmission management system;

receiving state information after change indicating a changed state, if in response to the control being executed by an other transmission management system, from the other transmission management system;

transmitting, to the other transmission management system, the state information indicating the changed state, in response to the control being executed by the transmission management system;

transmitting, to another second transmission terminal that is capable of communicating with the transmission terminal and that is directly connected to the transmission management system, the state information indicating the changed state; and

second changing the state information managed by the transmission management system based on the state information after change received by the receiving.

9. The method set forth in claim 8, further comprising:

managing, in an associated manner, identification information of a transmission terminal as a requester terminal submitting a request of start of communication and identification information of a transmission terminal as a destination terminal to which the start of communication is requested, the identification information including domain information; and

transmitting, to another transmission management system corresponding to the domain information of the destination terminal, the state information indicating the changed state.

* * * * *