US009256583B2

(12) **United States Patent**
Caten

(10) **Patent No.: US 9,256,583 B2**
(45) **Date of Patent: *Feb. 9, 2016**

(54) **CONVERSION OF A PRESENTATION TO DARWIN INFORMATION TYPING ARCHITECTURE (DITA)**

(71) Applicant: **International Business Machines Corporation**, Armonk, NY (US)

(72) Inventor: **Lisa M. Caten**, Lowell, MA (US)

(73) Assignee: **International Business Machines Corporation**, Armonk, NY (US)

(*) Notice: Subject to any disclaimer, the term of this patent is extended or adjusted under 35 U.S.C. 154(b) by 0 days.

This patent is subject to a terminal disclaimer.

(21) Appl. No.: **14/202,718**

(22) Filed: **Mar. 10, 2014**

(65) **Prior Publication Data**

US 2014/0195896 A1 Jul. 10, 2014

Related U.S. Application Data

(63) Continuation of application No. 13/658,069, filed on Oct. 23, 2012.

(51) **Int. Cl.**

G06F 17/00	(2006.01)
G06F 17/22	(2006.01)
G06F 17/30	(2006.01)
G06F 9/45	(2006.01)

(52) **U.S. Cl.**

CPC ***G06F 17/2247*** (2013.01); ***G06F 17/227*** (2013.01); *G06F 8/427* (2013.01); *G06F 17/30781* (2013.01)

(58) **Field of Classification Search**

CPC G06F 17/2247; G06F 17/30781

See application file for complete search history.

(56) **References Cited**

U.S. PATENT DOCUMENTS

7,065,588 B2 6/2006 Konda et al.
7,398,464 B1 * 7/2008 Wei et al. 715/239

(Continued)

FOREIGN PATENT DOCUMENTS

WO WO 2009026159 A1 * 2/2009 ..... G11B 27/034

OTHER PUBLICATIONS

Putnik et. al. "A Practical Model for Conversion of Existing Teaching Resources into Learning Objects", MASAUM Journal of Computing, vol. 1 Issue 2, Sep. 2009, pp. 205-213.

(Continued)

Primary Examiner — Scott Baderman
Assistant Examiner — Barbara Level
(74) *Attorney, Agent, or Firm* — Daniel R. Simek

(57) **ABSTRACT**

One embodiment of the present invention discloses a method, computer program product, and system for converting a Microsoft® PowerPoint® file to Darwin Information Typing Architecture (DITA). A document converter receiving a command from a client device to convert one or more PowerPoint slides to DITA, wherein the PowerPoint has been formatted for conversion to DITA. Starting with the first PowerPoint slide, metadata tags, PowerPoint slide and notes text, and file names of grouped images are compiled into a string parsed with DITA markup. If the next slide does not begin a new topic, then that slide's metadata tags, PowerPoint slide and notes text, and grouped image file names are compiled into a string parsed with DITA markup and appended to the previous slides string. If the next slide begins a new topic, then the string is exported to a DITA topic. This process is repeated throughout the PowerPoint presentation.

7 Claims, 6 Drawing Sheets

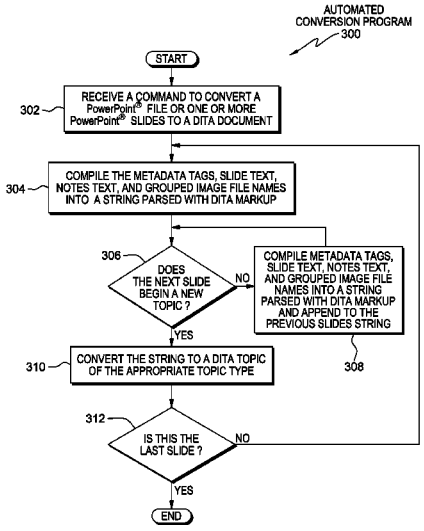

(56) **References Cited**

U.S. PATENT DOCUMENTS

7,921,137	B2 *	4/2011	Lieske et al.	707/802
8,756,232	B1 *	6/2014	Ringhiser et al.	707/738
2004/0221228	A1 *	11/2004	Day et al.	715/513
2005/0041872	A1	2/2005	Yim et al.	
2005/0091579	A1 *	4/2005	Mewherter et al.	715/513
2006/0242180	A1 *	10/2006	Graf et al.	707/101
2007/0277101	A1 *	11/2007	Barber et al.	715/539
2008/0092051	A1 *	4/2008	Sidon et al.	715/731
2009/0125804	A1 *	5/2009	Brown et al.	715/239
2009/0183066	A1 *	7/2009	Crawford et al.	715/231
2009/0193036	A1 *	7/2009	Petri	707/100
2009/0210796	A1 *	8/2009	Bhogal et al.	715/730
2009/0210861	A1 *	8/2009	Alupului	717/123
2010/0114985	A1 *	5/2010	Chaudhary et al.	707/803
2010/0153839	A1 *	6/2010	Wilkins	715/235
2011/0161348	A1 *	6/2011	Oron	707/769
2013/0326336	A1 *	12/2013	Lanque et al.	715/234

OTHER PUBLICATIONS

"DITA Exhange PowerPoint Publishing," Content Technologies, Denmark, Mar. 21, 2010.

"Embedding iSpring Courses into DITA Learning Content," iSpring Solutions, Inc., Date printed: Oct. 12, 2012. <http://www.ispringsolutions.com/articles/embedding_ispring_into_dita.html>.

* cited by examiner

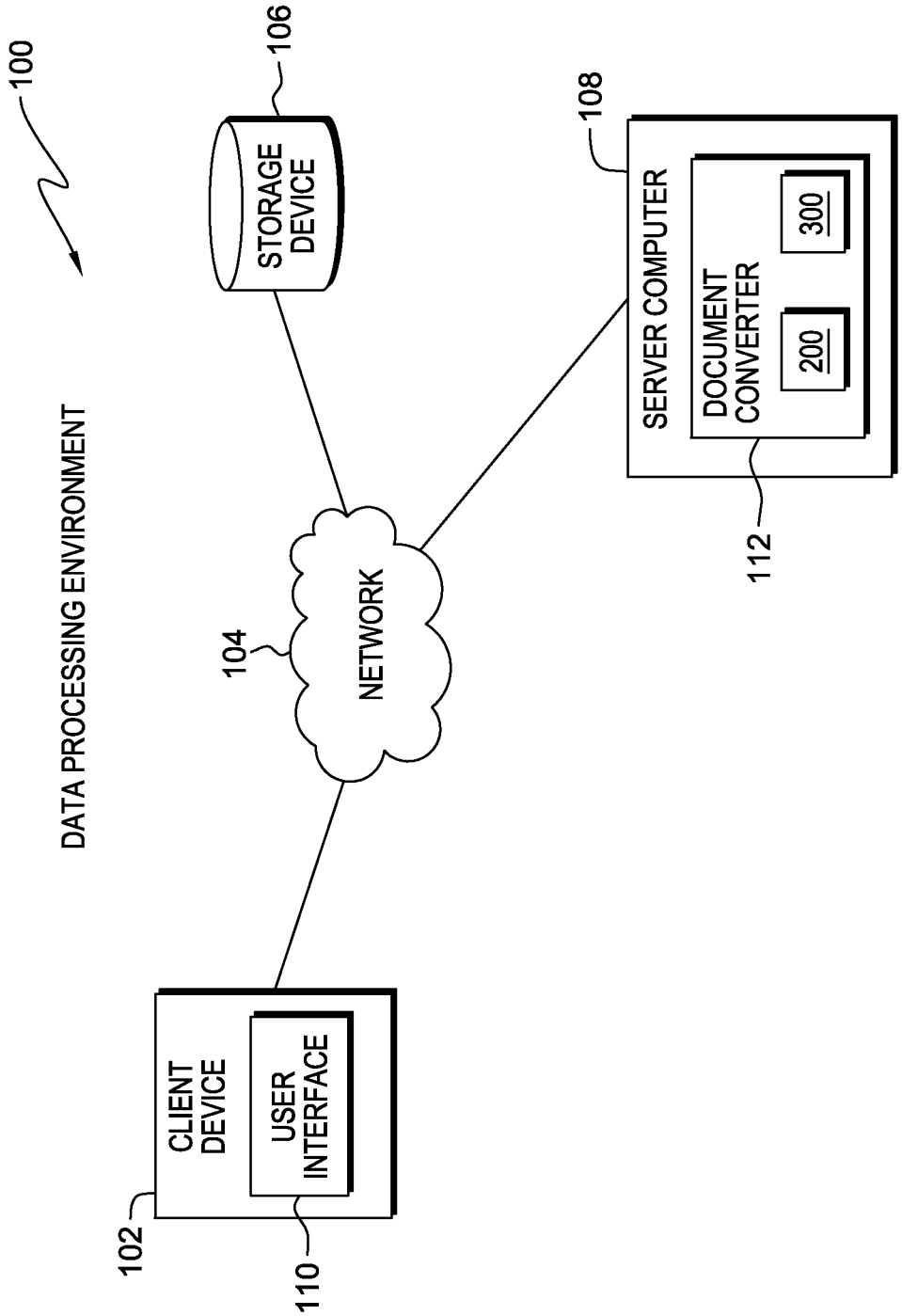
100
DATA PROCESSING ENVIRONMENT
102
CLIENT DEVICE
USER INTERFACE
110
104
NETWORK
106
STORAGE DEVICE
108
SERVER COMPUTER
DOCUMENT CONVERTER
200
300
112

FIG. 1

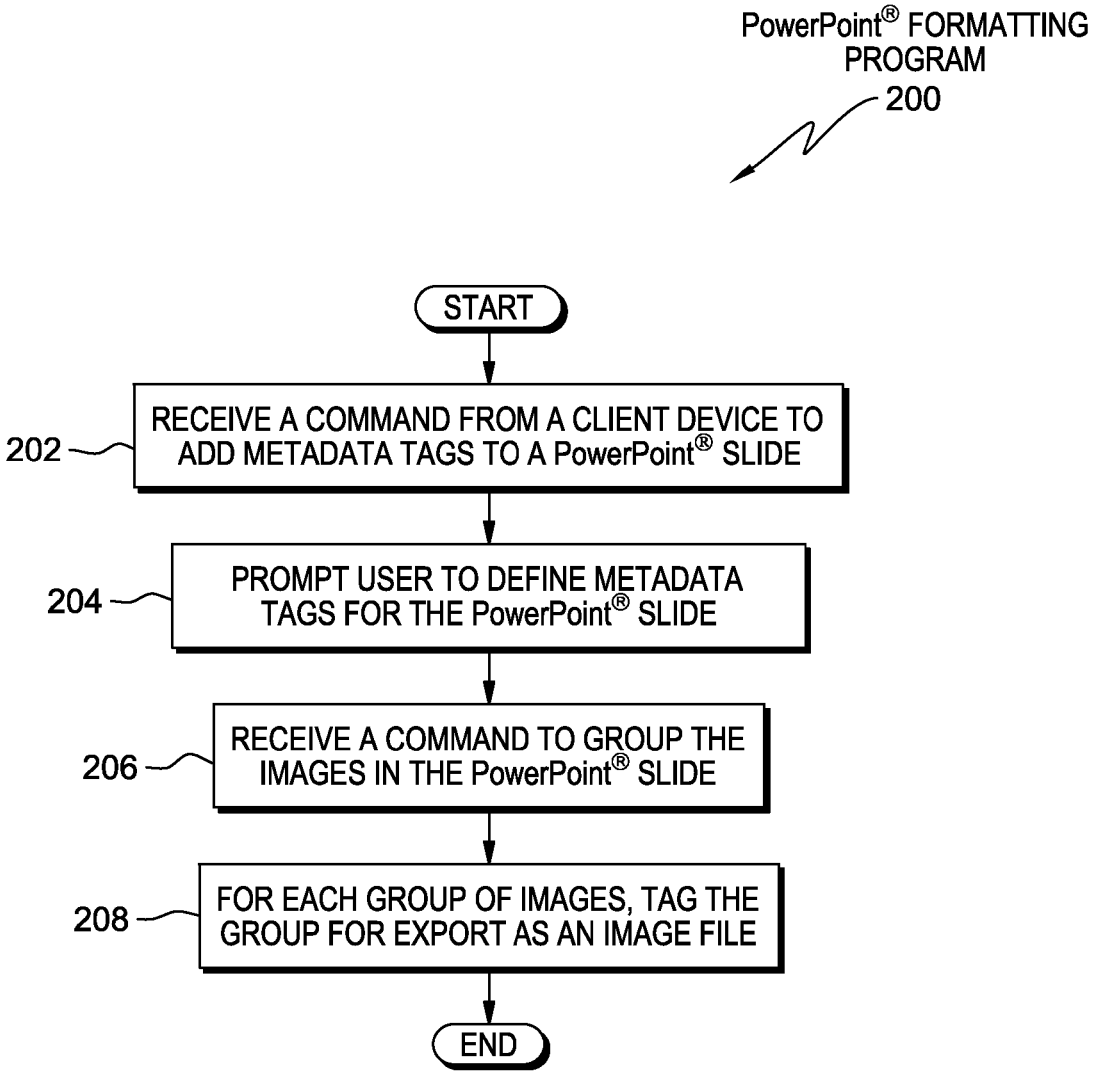
PowerPoint® FORMATTING PROGRAM
200
START
202
RECEIVE A COMMAND FROM A CLIENT DEVICE TO ADD METADATA TAGS TO A PowerPoint® SLIDE
204
PROMPT USER TO DEFINE METADATA TAGS FOR THE PowerPoint® SLIDE
206
RECEIVE A COMMAND TO GROUP THE IMAGES IN THE PowerPoint® SLIDE
208
FOR EACH GROUP OF IMAGES, TAG THE GROUP FOR EXPORT AS AN IMAGE FILE
END

FIG. 2

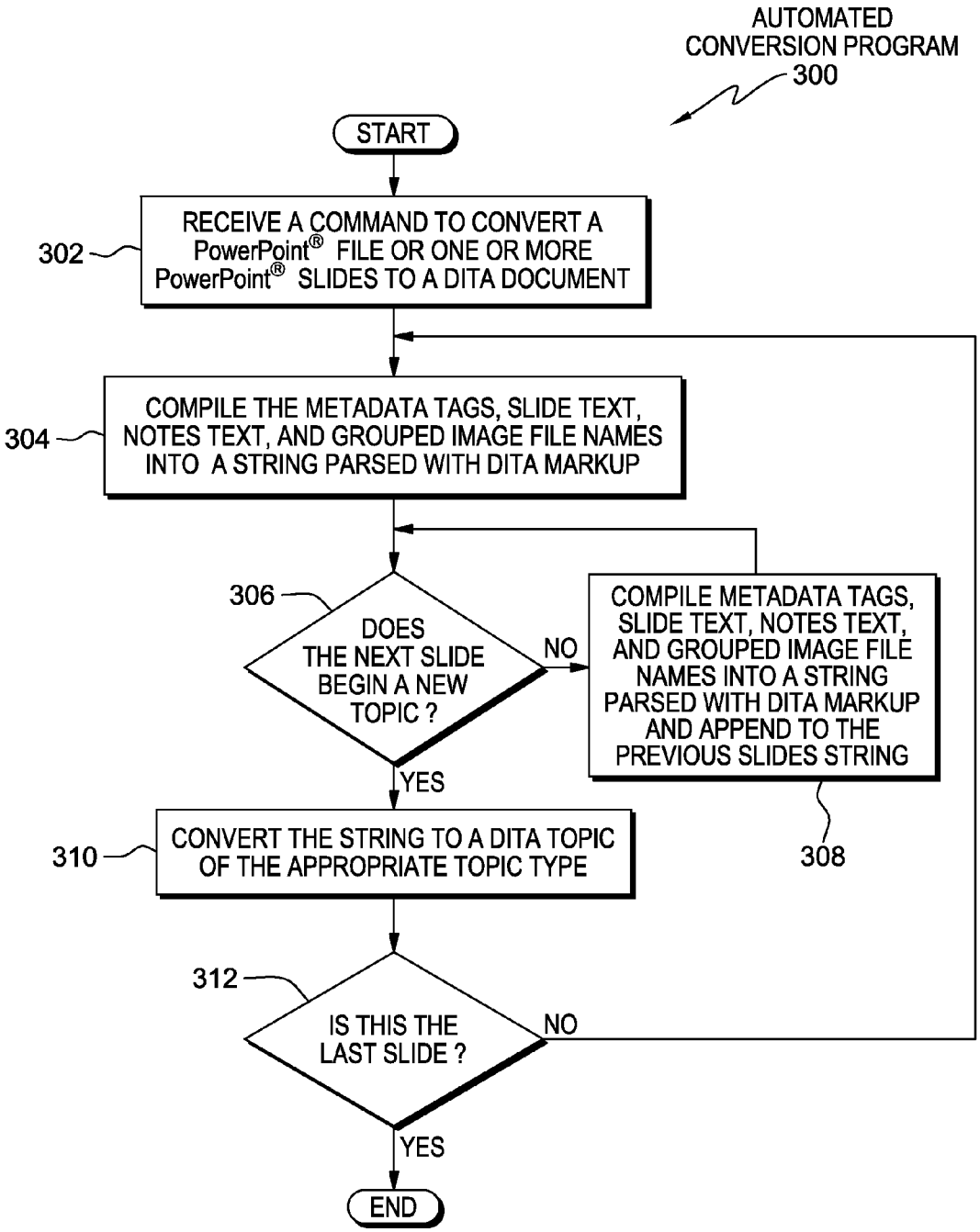
AUTOMATED CONVERSION PROGRAM
300
START
RECEIVE A COMMAND TO CONVERT A PowerPoint® FILE OR ONE OR MORE PowerPoint® SLIDES TO A DITA DOCUMENT
302
COMPILE THE METADATA TAGS, SLIDE TEXT, NOTES TEXT, AND GROUPED IMAGE FILE NAMES INTO A STRING PARSED WITH DITA MARKUP
304
306
DOES THE NEXT SLIDE BEGIN A NEW TOPIC ?
NO
COMPILE METADATA TAGS, SLIDE TEXT, NOTES TEXT, AND GROUPED IMAGE FILE NAMES INTO A STRING PARSED WITH DITA MARKUP AND APPEND TO THE PREVIOUS SLIDES STRING
308
YES
CONVERT THE STRING TO A DITA TOPIC OF THE APPROPRIATE TOPIC TYPE
310
312
IS THIS THE LAST SLIDE ?
NO
YES
END

FIG. 3

SLIDE INFORMATION GATHERING
SAMPLE ALGORITHM
400

```
For Each oSh In oShapes
    With oSh
      'If it's a ppPlaceholderBody, get its text
      If .Type = msoPlaceholder Then
        If .PlaceholderFormat.Type = ppPlaceholderBody Then
          Set oTextRange = oSh.TextFrame.TextRange
          'Substitute character codes for special characters
          Set oTextRange = dita_SubstituteCharCodes(oTextRange)
          With dita_DeleteEmptyPars(oSh, oTextRange)
            'Parse each paragraph to build str_slideBodyText and including DITA elements
            Set oTextRange = oSh.TextFrame.TextRange
            'Call dita_ParseParagraph(oTextRange)

            Select Case str_ditaTopicType
              Case "Concept"
                str_slideBodyText = dita_ParseParagraph(oTextRange)
              Case "Task"
                str_slideBodyText = dita_ParseParagraphTask(oTextRange)
              Case "Reference"
                str_slideBodyText = dita_ParseParagraph(oTextRange)
            End Select
            str_parsedParagraph = str_parsedParagraph & vbCrLf & str_slideBodyText
          End With
        End If
      End If
    End With
  Next 'oSh Shape
  For Each oSh In oShapes
    With oSh
      If .Type = msoPicture Or .Type = msoGroup Then
        With .Tags
          For i = 1 To .Count
            If .Name(i) = "FILENAME" Then
              str_imageFileName = .Value(i)
              If oSh.AlternativeText <> "" Then
                str_imageAltText = oSh.AlternativeText
              Else
                str_imageAltText = "place image alt text here"
              End If
            bln_ditaImageFound = True
            End If
          Next 'i Tag
        End With
      End If
    End With
```

FIG. 4

NEW TOPIC IDENTIFICATION
SAMPLE ALGORITHM
500

```
Dim x As Integer
Dim bln_ditaTopicFound As Boolean

  With oSlideDITA.Tags
    For x = 1 To .Count
      If .Name(x) = "DITA_TOPIC_TYPE" Then
        bln_ditaTopicFound = True
        Exit For
      End If
      If .Name(x) = "DITA_TOPIC_TITLE" Then
        bln_ditaTopicFound = True
        Exit For
      End If
      If .Name(x) = "DITA_TOPIC_FILE_NAME" Then
        bln_ditaTopicFound = True
        Exit For
      End If
    Next ' x Tag
  End With

  If bln_ditaTopicFound = True Then
    dita_IsNewTopic = True
  End If

End Function
```

FIG. 5

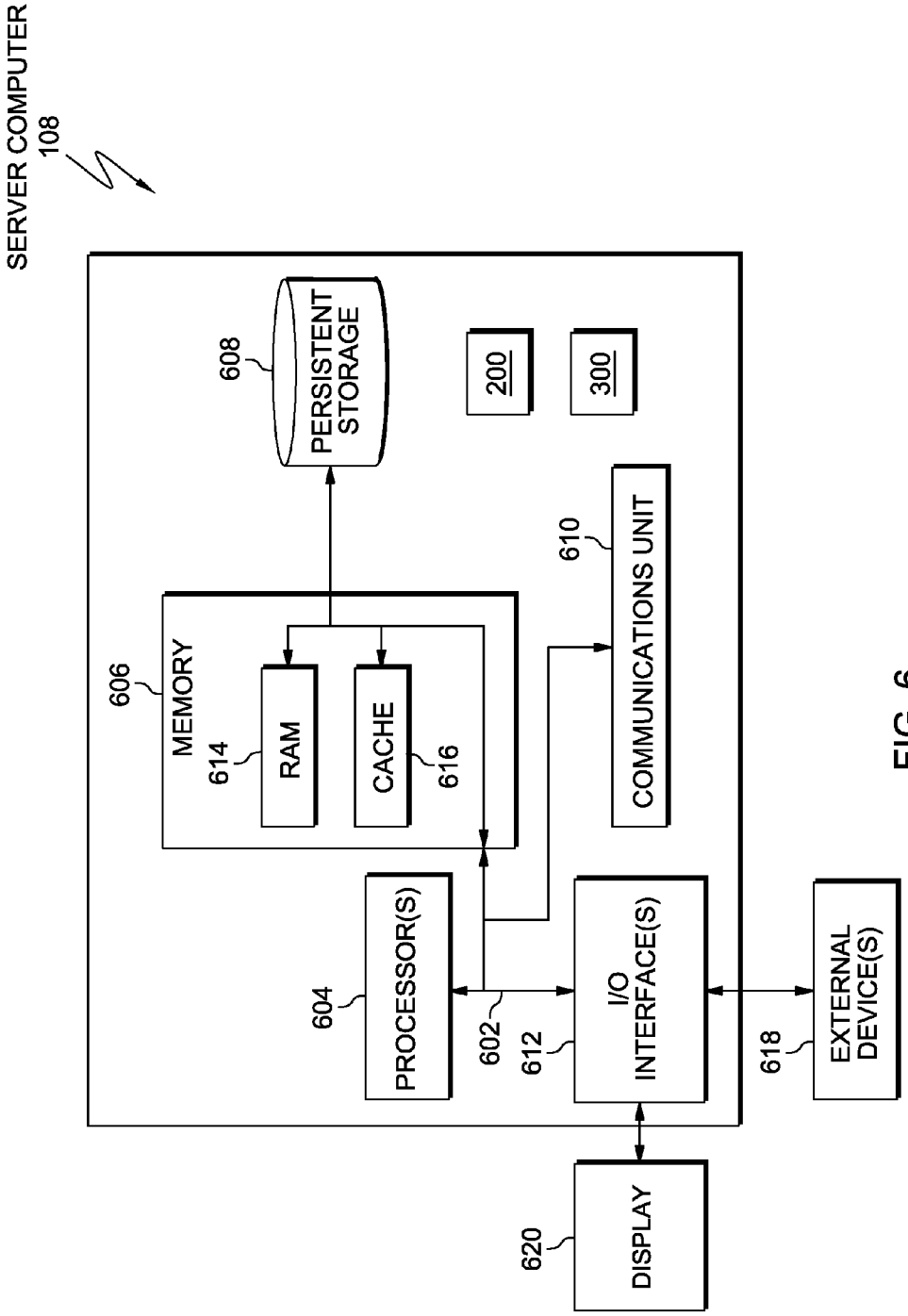
SERVER COMPUTER
108
608
PERSISTENT STORAGE
200
300
610
COMMUNICATIONS UNIT
606
MEMORY
614
RAM
CACHE
616
604
PROCESSOR(S)
602
612
I/O INTERFACE(S)
618
EXTERNAL DEVICE(S)
620
DISPLAY

FIG. 6

CONVERSION OF A PRESENTATION TO DARWIN INFORMATION TYPING ARCHITECTURE (DITA)

CROSS-REFERENCE TO RELATED APPLICATIONS

This application is a continuation of U.S. patent application Ser. No. 13/658,069 filed on Oct. 23, 2012, the entire content and disclosure of which is incorporated herein by reference.

FIELD OF THE INVENTION

The present invention relates generally to the field of document conversion software and more particularly to converting a Microsoft® PowerPoint® file to Darwin Information Typing Architecture (DITA).

BACKGROUND OF THE INVENTION

PowerPoint® is a file format of presentation software created by Microsoft®. A PowerPoint presentation consists of a number of individual pages or "slides" which are populated with information. The slides may contain text, notes, graphics and images, movies, sound, or other objects.

The Darwin Information Typing Architecture (DITA) is a standard Extensible Markup Language (XML) data model which is used for authoring and publishing content. DITA content is created by dividing information into topic items. There are three basic topic types: Task, Concept, and Reference. The topics are organized with a title element, elements of metadata, and a body element which is comprised of information relating to the specific topic. The metadata in DITA includes information and attributes about the topic which makes it easier to locate.

SUMMARY

One embodiment of the present invention discloses a method, computer program product, and system for converting a Microsoft® PowerPoint® file to Darwin Information Typing Architecture (DITA). A document converter receiving a command from a client device to convert one or more PowerPoint slides to DITA, wherein the PowerPoint has been formatted for conversion to DITA. Starting with the first PowerPoint slide, metadata tags, PowerPoint slide and notes text, and file names of grouped images are compiled into a string parsed with DITA markup. If the next slide does not begin a new topic, then that slide's metadata tags, PowerPoint slide and notes text, and grouped image file names are compiled into a string parsed with DITA markup and appended to the previous slides string. If the next slide begins a new topic, then the string is exported to a DITA topic. This process is repeated throughout the PowerPoint presentation.

BRIEF DESCRIPTION OF THE SEVERAL VIEWS OF THE DRAWINGS

FIG. **1** is a pictorial representation of a distributed data processing environment in accordance with an embodiment of the present invention.

FIG. **2** is a flowchart depicting operational steps of a program for formatting a Microsoft PowerPoint presentation so that it may be converted to a DITA document in accordance with an embodiment of the present invention.

FIG. **3** illustrates operational steps of a program for the automated conversion of a Microsoft PowerPoint presentation to a DITA document, in accordance with an embodiment of the present invention.

FIG. **4** depicts a slide information gathering sample algorithm in accordance with an embodiment of the automated conversion program from FIG. **3**.

FIG. **5** depicts a new topic identification sample algorithm in accordance with an embodiment of the automated conversion program.

FIG. **6** depicts a block diagram of components of the server computer **108** executing the PowerPoint formatting program and automated conversion program, in accordance with an embodiment of the present invention.

DETAILED DESCRIPTION

As will be appreciated by one skilled in the art, aspects of the present invention may be embodied as a system, method or computer program product. Accordingly, aspects of the present invention may take the form of an entirely hardware embodiment, an entirely software embodiment (including firmware, resident software, micro-code, etc.) or an embodiment combining software and hardware aspects that may all generally be referred to herein as a "circuit," "module" or "system." Furthermore, aspects of the present invention may take the form of a computer program product embodied in one or more computer-readable medium(s) having computer readable program code/instructions embodied thereon.

Any combination of one or more computer-readable medium(s) may be utilized. The computer-readable medium may be a computer-readable signal medium or a computer-readable storage medium. A computer-readable storage medium may be, for example, but not limited to, an electronic, magnetic, optical, electromagnetic, infrared, or semiconductor system, apparatus, or device, or any suitable combination of the foregoing. More specific examples (a non-exhaustive list) of the computer-readable storage medium would include the following: an electrical connection having one or more wires, a portable computer diskette, a hard disk, a random access memory (RAM), a read-only memory (ROM), an erasable programmable read-only memory (EPROM or Flash memory), an optical fiber, a portable compact disc read-only memory (CD-ROM), an optical storage device, a magnetic storage device, or any suitable combination of the foregoing. In the context of this document, a computer-readable storage medium may be any tangible medium that can contain, or store a program for use by or in connection with an instruction execution system, apparatus, or device.

A computer-readable signal medium may include a propagated data signal with computer-readable program code embodied therein, for example, in baseband or as part of a carrier wave. Such a propagated signal may take any of a variety of forms, including, but not limited to, electro-magnetic, optical, or any suitable combination thereof. A computer-readable signal medium may be any computer-readable medium that is not a computer-readable storage medium and that can communicate, propagate, or transport a program for use by or in connection with an instruction execution system, apparatus, or device.

Program code embodied on a computer-readable medium may be transmitted using any appropriate medium, including but not limited to wireless, wireline, optical fiber cable, RF, etc., or any suitable combination of the foregoing.

Computer program code for carrying out operations for aspects of the present invention may be written in any combination of one or more programming languages, including

an object oriented programming language such as Java®, Smalltalk, C++ or the like and conventional procedural programming languages, such as the "C" programming language or similar programming languages. The program code may execute entirely on a user's computer, partly on the user's computer, as a stand-alone software package, partly on the user's computer and partly on a remote computer or entirely on the remote computer or server. In the latter scenario, the remote computer may be connected to the user's computer through any type of network, including a local area network (LAN) or a wide area network (WAN), or the connection may be made to an external computer (for example, through the Internet using an Internet Service Provider).

Aspects of the present invention are described below with reference to flowchart illustrations and/or block diagrams of methods, apparatus (systems) and computer program products according to embodiments of the invention. It will be understood that each block of the flowchart illustrations and/or block diagrams, and combinations of blocks in the flowchart illustrations and/or block diagrams, can be implemented by computer program instructions. These computer program instructions may be provided to a processor of a general purpose computer, special purpose computer, or other programmable data processing apparatus to produce a machine, such that the instructions, which execute via the processor of the computer or other programmable data processing apparatus, create means for implementing the functions/acts specified in the flowchart and/or block diagram block or blocks.

These computer program instructions may also be stored in a computer-readable medium that can direct a computer, other programmable data processing apparatus, or other devices to function in a particular manner, such that the instructions stored in the computer-readable medium produce an article of manufacture including instructions which implement the function/act specified in the flowchart and/or block diagram block or blocks.

The computer program instructions may also be loaded onto a computer, other programmable data processing apparatus, or other devices to cause a series of operational steps to be performed on the computer, other programmable apparatus or other devices to produce a computer-implemented process such that the instructions which execute on the computer or other programmable apparatus provide processes for implementing the functions/acts specified in the flowchart and/or block diagram block or blocks.

The present invention will now be described in detail with reference to the Figures. FIG. **1** is a functional block diagram illustrating a data processing environment **100** in accordance with one embodiment of the present invention.

Data processing environment **100** includes a client device **102**, a storage device **106**, and a server computer **108** which are connected through a network **104**. Client device **102** may be a workstation, personal computer, personal digital assistant, mobile phone, or other devices capable of executing program instructions. A user interface **110** is located on client device **102** and may exist in the form of operating system software, which may be Windows®, LINUX®, or other systems that include application software such as internet applications and web browsers. In an embodiment, user interface **110** includes applications which utilize network **104** to access content on storage device **106** or server computer **108**.

In an embodiment, data processing environment **100** includes network **104**, which provides communication between devices such as, but not limited to client device **102**, storage device **106**, and server computer **108**. Network **104** may include connections such as wiring, wireless communication link, fiber optic cables, and other forms of communication. Network **104** may allow elements of data processing environment **100** to access content through a plurality of methods, including the internet, an intranet connection, telecommunications service provider, local area connection, and others.

Storage device **106** may represent any type of storage which is capable of storing data which may be accessed and utilized by client device **102** and server computer **108**, including a database server, a hard drive on a computing device, flash memory, an external storage device, or other means of data storage. As depicted, storage device **106** is a networked storage device accessible via network **104**. In an alternative embodiment, storage device **106** may be located on client device **102** as a component of client device **102**. In an example, storage device **106** may be a repository for product information and product instructions which may be accessed by documentation developers and training developers. In another example, storage device **106** may be a repository database consisting of content such as Microsoft PowerPoint presentations, and Darwin Information Typing Architecture (DITA) documents which may be accessed by client device **102** and server computer **108**.

A document converter program **112** is located on server computer **108** and can access and convert content located on storage device **106** responsive to a command from client device **102**. In an embodiment, document converter program **112** can convert Microsoft PowerPoint presentations into DITA documents. In the depicted embodiment, document converter program **112** is located on server computer **108** in the form of an application. In another embodiment, document converter program **112** may be located on client device **102**. Server computer **108** may be any programmable electronic device as described previously with respect to client device **102**. In one embodiment, server computer **108** represents a "cloud" of computers interconnected by one or more networks, where server computer **108** is a primary server for a computer system utilizing clustered computers and components to act as a single pool of seamless resources when accessed through network **104**. For example, this implementation may be preferred for data centers and for cloud computing applications

Embodiments of the present invention recognize that documentation developers who produce product support information and training developers who produce end user training documents often end up duplicating each others work. Since both are writing for an end user audience, a common repository for product information and product instructions could reduce the duplication of documentation. However, to utilize each others information in such a repository effectively, a common file format should be used.

The Darwin Information Typing Architecture (DITA) supports a single sourcing of content. DITA has been widely used by documentation teams, however it is not widely used on training development teams. A large volume of current training content exists in the form of Microsoft PowerPoint presentations rather than DITA. This means that a large amount of training content exists in a format different than a widely used format for the product support documentation. A means to convert Microsoft PowerPoint presentations to DITA documents would allow training documents to be converted into the same format as product support documents, which would allow documentation developers and training developers to utilize each others information effectively. Document converter program **112** includes a PowerPoint formatting program **200** for preparing a Microsoft PowerPoint presentation so that it may be converted to a DITA document. In one

embodiment, document converter program **112** also includes an automated conversion program **300** for converting a Microsoft PowerPoint presentation to a DITA document. A person of ordinary skill in the art will recognize that the software described herein will be applicable for any type of presentation software. Document converter program **112**, PowerPoint formatting program **200**, and automated conversion program **300** may be stored on server computer **108** in the form of program instructions. However, in other examples, the programs may be stored on remote storage devices (e.g., storage device **106**), servers, or networked computer systems. Detailed implementation of programs **200** and **300** are discussed with regard to FIGS. **2** and **3** respectively.

Server computer **108** may include internal and external hardware components, as depicted and described in further detail with respect to FIG. **6**.

FIG. **2** is a flowchart depicting operational steps of PowerPoint formatting program **200**. In one embodiment, PowerPoint formatting program **200** prepares a PowerPoint slide to be converted to a DITA document responsive to user specifications.

In step **202**, PowerPoint formatting program **200** receives a command from client device **102** to add metadata tags to a PowerPoint slide. The command to add metadata tags to a PowerPoint slide may be accomplished through a user input in a user form activated by clicking a button on a PowerPoint add-in toolbar. In step **204**, PowerPoint formatting program **200** prompts a user to define metadata tags for the PowerPoint slide. The metadata tags defined in step **204** may be marking the concept, task, and reference topic types which are used in DITA. When the user is prompted to define the metadata tags for the slide, the user may define the appropriate topic title and topic file name for the slide, and then decide whether the topic is a concept, task, or reference. Responsive to the user definition from step **204**, the PowerPoint slide is tagged with the appropriate metadata, which prepares the slide for conversion through automated conversion program **300**. In an embodiment, step **202** may also be a command to edit metadata tags which have been previously defined by the user.

In step **206**, PowerPoint formatting program **200** receives a command to group images in the PowerPoint slide. In an example, the command to group the images in a PowerPoint slide comes from a user on client device **102**. The selection of images to group in step **206** may be accomplished by the user selecting the desired component graphic elements on the slide and then selecting the group image command in a PowerPoint add-in toolbar. In an embodiment, the images grouped may be graphical elements of diagrams such as lines, arrows and boxes. The grouping of images allows the original arrangement of the images to be preserved when converting the slide to DITA. Subsequent to the images being grouped responsive to the user command in step **206**, the image group is then ready to be exported as an image file in automated conversion program **300**. In one embodiment, when the images are grouped in step **206**, PowerPoint formatting program **200** adds a bottom layer to the group of images and the group is tagged as a composite image to be exported as a single image file. The addition of the bottom layer to the group of images may be used to provide a uniform background to the group of images which does not obscure any of the elements of the group of images. The command to group the images in a PowerPoint slide in step **206** may be accomplished through a user input in a PowerPoint add-in toolbar. PowerPoint formatting program **200** tags each group of images for export as an image file (step **208**). In an embodiment, in step **208** each group of images is tagged with metadata that defines the file name for the image file to be exported/created and flags the group to be exported to a single image file by the automated conversion program **300**. In an example where a PowerPoint presentation is comprised of more than one slide, PowerPoint formatting program **200** may be repeated for every slide in the PowerPoint presentation.

FIG. **3** is a flowchart depicting operational steps of automated conversion program **300**. Automated conversion program **300** may be initiated after PowerPoint formatting program **200** has been completed for each slide in the PowerPoint. In one embodiment, automated conversion program **300** converts a Microsoft PowerPoint presentation to a DITA document.

In step **302**, automated conversion program **300** receives a command to convert a PowerPoint file or one or more PowerPoint slides to a DITA document. In an example, the command to convert a PowerPoint file to DITA in step **302** may be accomplished through a user input in a PowerPoint add-in toolbar. In step **304**, automated conversion program **300** compiles the metadata tags, PowerPoint slide text, PowerPoint slide notes text, and grouped image file names into a string parsed with DITA markup for a slide in the PowerPoint file. The metadata tags contain at least in part a topic title, topic file name, and topic type. In an example, the image file names compiled in step **304** of automated conversion program **300** are the grouped image file names which were tagged for export in step **208** of PowerPoint formatting program **200**. An example of an image file format which the group of images may be saved as is a JPEG image file. In an embodiment, the PowerPoint slide text compiled in step **304** may be the text in the body of the PowerPoint slide or text in other place holders in the PowerPoint slide. The PowerPoint notes text compiled in step **304** may be the text in the notes section of the PowerPoint slide.

In step **306**, automated conversion program **300** determines whether the next slide is the beginning of a new topic. The determination that the next slide is the beginning of a new topic in step **306** may be accomplished through accessing metadata tags which were assigned to the slide in step **204** of PowerPoint formatting program **200**. If automated conversion program **300** determines that the next slide does not begin a new topic (no branch of decision block **306**), automated conversion program **300** compiles the metadata tags, PowerPoint slide text, PowerPoint slide notes text, and grouped image file names for the slide into a string parsed with DITA markup and appends the information to the previous slides string (step **308**). If automated conversion program **300** determines that the next slide is the beginning of a new topic (yes branch of decision block **306**), automated conversion program **300** converts the string to a DITA topic of the appropriate topic type (step **310**). The appropriate topic type from step **310** can be defined in step **204** of PowerPoint formatting program **200**.

In step **312**, automated conversion program **300** determines whether the slide which was previously converted was the last slide. If automated conversion program **300** determines that it was not the last slide (no branch of decision block **312**), automated conversion program **300** repeats, starting at step **304** for the new slide. If automated conversion program **300** determines that it was the last slide (yes branch of decision block **312**), then automated conversion program **300** is completed. In an embodiment, step **312** ensures that automated conversion program **300** repeats for each slide in a PowerPoint file. An exemplary result of automated conversion program **300** may be each slide in a PowerPoint presentation is converted and organized into a DITA topic and formatted so that the file may be opened in a DITA authoring or viewing program.

FIG. **4** depicts a slide information gathering sample algorithm **400** that gathers and compiles information from a PowerPoint slide in accordance with an embodiment of automated conversion program **300**. In an embodiment, slide information gathering sample algorithm **400** compiles at least in part metadata tags, PowerPoint slide text, PowerPoint notes text, and grouped image file names.

FIG. **5** depicts a new topic identification sample algorithm **500** that determines whether or not a PowerPoint slide contains the beginning of a new topic in accordance with an embodiment of automated conversion program **300**.

FIG. **6** depicts a block diagram of components of server computer **108** in accordance with an illustrative embodiment. It should be appreciated that FIG. **6** provides only an illustration of one implementation and does not imply any limitations with regard to the environment in which different embodiments may be implemented. Many modifications to the depicted environment may be made.

Server computer **108** includes communications fabric **602**, which provides communications between computer processor(s) **604**, memory **606**, persistent storage **608**, communications unit **610**, and input/output (I/O) interface(s) **612**.

Memory **606** and persistent storage **608** are examples of computer-readable tangible storage devices and media. Memory **606** may be, for example, one or more random access memories (RAM) **614**, cache memory **616**, or any other suitable volatile or non-volatile storage device.

PowerPoint formatting program **200** and automated conversion program **300** are stored in persistent storage **608** for execution by one or more of the respective computer processors **604** via one or more memories of memory **606**. In the embodiment illustrated in FIG. **6**, persistent storage **608** includes flash memory. Alternatively, or in addition to flash memory, persistent storage **608** may include a magnetic disk storage device of an internal hard drive, a solid state drive, a semiconductor storage device, read-only memory (ROM), EPROM, or any other computer-readable tangible storage device that is capable of storing program instructions or digital information.

The media used by persistent storage **608** may also be removable. For example, a removable hard drive may be used for persistent storage **608**. Other examples include an optical or magnetic disk that is inserted into a drive for transfer onto another storage device that is also a part of persistent storage **608**, or other removable storage devices such as a thumb drive or smart card.

Communications unit **610**, in these examples, provides for communications with other data processing systems or devices, including resources of client device **102**, network **104** and storage device **106**. In these examples, communications unit **610** includes one or more network interface cards. Communications unit **610** may provide communications through the use of either or both physical and wireless communications links. PowerPoint formatting program **200** and automated conversion program **300** may be downloaded to persistent storage **608** through communications unit **610**.

I/O interface(s) **612** allows for input and output of data with other devices that may be connected to server computer **108**. For example, I/O interface **612** may provide a connection to external devices **618** such as a keyboard, keypad, a touch screen, and/or some other suitable input device. I/O interface (s) may also connect to a display **620**.

Display **620** provides a mechanism to display data to a user and may be, for example, a computer monitor.

The programs described herein are identified based upon the application for which they are implemented in a specific embodiment of the invention. However, it should be appreciated that any particular program nomenclature herein is used merely for convenience, and thus the invention should not be limited to use solely in any specific application identified and/or implied by such nomenclature.

The flowchart and block diagrams in the FIGS. illustrate the architecture, functionality, and operation of possible implementations of systems, methods and computer program products according to various embodiments of the present invention. In this regard, each block in the flowchart or block diagrams may represent a module, segment, or portion of code, which comprises one or more executable instructions for implementing the specified logical function(s). It should also be noted that, in some alternative implementations, the functions noted in the block may occur out of the order noted in the figures. For example, two blocks shown in succession may, in fact, be executed substantially concurrently, or the blocks may sometimes be executed in the reverse order, depending upon the functionality involved. It will also be noted that each block of the block diagrams and/or flowchart illustration, and combinations of blocks in the block diagrams and/or flowchart illustration, can be implemented by special purpose hardware-based systems that perform the specified functions or acts, or combinations of special purpose hardware and computer instructions.

What is claimed is:

1. A method for converting a presentation file to Darwin Information Typing Architecture (DITA), the method comprising:

prior to receiving a command to convert one or more presentation slides to a DITA document, a computer receiving a command to group graphical elements located on a presentation slide;

responsive to receiving the command to group graphical elements located on the presentation slide, the computer assigning metadata tags to the grouped graphical elements, the metadata tags comprising at least in part a file name for the group of graphical elements and an indication that the group is to be exported to a single image file

the computer receiving a command to convert one or more presentation slides to a DITA document, wherein the one or more presentation slides to be converted have been tagged with metadata corresponding to topic type and grouped graphical element file names;

responsive to receiving the command to convert one or more presentation slides to a DITA document, the computer compiling information from the presentation slide, the information selected from the group consisting of the metadata tags, text in the presentation slide, text in a notes section of the presentation slide, and grouped graphical element file names from a first presentation slide of the one or more presentation slides into a string parsed with DITA markup;

the computer accessing the metadata tags for a second presentation slide and determining whether the second presentation slide is a new topic;

the computer determining that the second presentation slide is a new topic; and

responsive to determining that the second presentation slide is a new topic, the computer converting the string parsed with DITA markup to a DITA topic defined by the metadata in the presentation slide.

2. The method of claim **1**, further comprising:

the computer determining that a third presentation slide is not a new topic; and

responsive to the computer determining that the third presentation slide is not the beginning of a new topic, the computer compiling metadata tags, text in the presenta-

tion slide, text in the notes section of the presentation slide, and grouped graphical element file names into a string parsed with DITA markup and appending to the string of the first presentation slide.

3. The method of claim **1**, further comprising:

prior to the command to convert one or more presentation slides to a DITA document, the computer receiving a command to add metadata tags to a presentation slide;

responsive to receiving the command to add metadata tags to a presentation slide, the computer prompting a user to define metadata tags for the presentation slide; and

responsive to a user defining metadata tags for the presentation slide, the computer assigning the defined metadata tags to the presentation slide, the defined metadata tags comprising at least in part topic type, topic title and topic file name.

4. The method of claim **1**, wherein the computer determining that the second presentation slide is a new topic by accessing the topic type, topic title, and topic file name located in the metadata of the second presentation slide.

5. The method of claim **1**, wherein the command to convert one or more presentation slides to a DITA document is received as a user input in a presentation add-in toolbar.

6. The method of claim **1**, further comprising:

prior to the command to convert one or more presentation slides to a DITA document, the computer receiving a command to edit metadata tags corresponding to a presentation slide;

responsive to receiving the command to edit metadata tags corresponding to a presentation slide, the computer prompting a user to define metadata tags for the presentation slide; and

responsive to a user defining metadata tags for the presentation slide, the computer assigning the defined metadata tags to the presentation slide, the defined metadata tags comprising at least in part topic type, topic title and topic file name.

7. A method for converting a presentation file to Darwin Information Typing Architecture (DITA), the method comprising:

a computer receiving a command to convert one or more presentation slides to a DITA document, wherein the one or more presentation slides to be converted have been tagged with metadata corresponding to topic type and grouped graphical element file names;

responsive to receiving the command to convert one or more presentation slides to a DITA document, the computer compiling information from the presentation slide, the information selected from the group consisting of the metadata tags, text in the presentation slide, text in a notes section of the presentation slide, and grouped graphical element file names from a first presentation slide of the one or more presentation slides into a string parsed with DITA markup;

the computer accessing the metadata tags for a second presentation slide and determining whether the second presentation slide is a new topic;

the computer determining that a third presentation slide is not a new topic; and

responsive to the computer determining that the third presentation slide is not the beginning of a new topic, the computer compiling metadata tags, text in the presentation slide, text in the notes section of the presentation slide, and grouped graphical element file names into a string parsed with DITA markup and appending to the string of the first presentation slide.

* * * * *