US009462882B2

(12) **United States Patent**
Epstein et al.

(10) **Patent No.: US 9,462,882 B2**
(45) **Date of Patent: *Oct. 11, 2016**

(54) **PERSONAL CONTROL APPARATUS AND METHOD FOR SHARING INFORMATION IN A COLLABORATIVE WORKSPACE**

(71) Applicant: **Steelcase Inc.**, Grand Rapids, MI (US)

(72) Inventors: **Lewis Epstein**, San Mateo, CA (US); **Brett Kincaid**, Lowell, MI (US); **Hyun Yoo**, Grand Rapids, MI (US); **Suzanne Stage**, San Francisco, CA (US); **Lukas Scherrer**, San Francisco, CA (US); **Larry Cheng**, Palo Alto, CA (US)

(73) Assignee: **Steelcase Inc.**, Grand Rapids, MI (US)

(*) Notice: Subject to any disclaimer, the term of this patent is extended or adjusted under 35 U.S.C. 154(b) by 77 days.

This patent is subject to a terminal disclaimer.

(21) Appl. No.: **14/293,138**

(22) Filed: **Jun. 2, 2014**

(65) **Prior Publication Data**

US 2015/0042885 A1 Feb. 12, 2015

Related U.S. Application Data

(63) Continuation of application No. 12/474,670, filed on May 29, 2009, now Pat. No. 8,896,656, which is a continuation of application No. 12/250,192, filed on Oct. 13, 2008, now Pat. No. 8,074,581.

(60) Provisional application No. 60/979,668, filed on Oct. 12, 2007.

(51) **Int. Cl.**
H04N 7/14 (2006.01)
A47B 21/06 (2006.01)
(Continued)

(52) **U.S. Cl.**
CPC ***A47B 21/06*** (2013.01); ***A47B 13/08*** (2013.01); ***A47B 21/00*** (2013.01); ***A47B 83/001*** (2013.01);
(Continued)

(58) **Field of Classification Search**
CPC H04N 7/183; H04N 5/268; A47B 21/00; A47B 2021/066
See application file for complete search history.

(56) **References Cited**

U.S. PATENT DOCUMENTS

892,954 A 7/1908 Hanson
1,189,799 A 7/1916 Erickson
(Continued)

FOREIGN PATENT DOCUMENTS

DE 3100660 A1 7/1982
DE 8533571 U1 1/1986
(Continued)

OTHER PUBLICATIONS

ISA—The Instrumentation, Systems and Automation Society, Microsoft Opens Productivity Research Center, Sep. 26, 2002, 1 page, http://www.isa.org/InTechTemplate.cfm?Section=InTech&template=/ContentManagement/ContentDisplay.cfm&ContentID=18830.
(Continued)

Primary Examiner — Asghar Bilgrami
(74) *Attorney, Agent, or Firm* — Quarles & Brady LLP

(57) **ABSTRACT**

A method and apparatus for selecting information from a video source to be displayed on at least a first common display screen in a collaborative workspace having a switching device, the method comprising the steps of providing a selectable control interface that includes at least one indicator that can indicate at least first and second different states, associating a video source with the switching device so that video information from the video source is presented to the switching device, when the video source is associated with the switching device, causing the at least one indicator to indicate a first state and when the selectable control interface is selected, causing the at least one indicator to indicate the second state and providing the video information from the video source to the common display screen via the switching device.

38 Claims, 48 Drawing Sheets

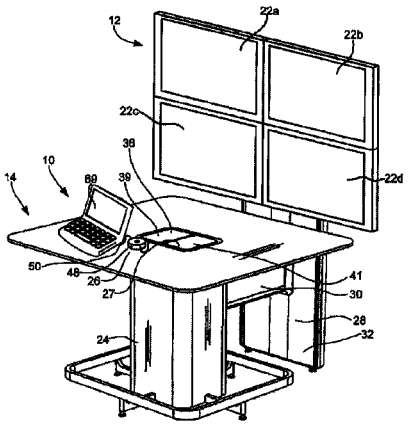

(51) **Int. Cl.**

H04N 5/268	(2006.01)
H04N 7/18	(2006.01)
G06F 3/0481	(2013.01)
A47B 13/08	(2006.01)
H04N 7/15	(2006.01)
A47B 21/00	(2006.01)
H04N 5/66	(2006.01)
G06F 1/16	(2006.01)
G06F 3/14	(2006.01)
A47B 83/00	(2006.01)
G06F 3/147	(2006.01)

(52) **U.S. Cl.**

CPC ***G06F 1/1632*** (2013.01); ***G06F 1/1647*** (2013.01); ***G06F 3/0481*** (2013.01); ***G06F 3/147*** (2013.01); ***G06F 3/1423*** (2013.01); ***H04N 5/268*** (2013.01); ***H04N 5/66*** (2013.01); ***H04N 7/142*** (2013.01); ***H04N 7/147*** (2013.01); ***H04N 7/15*** (2013.01); ***H04N 7/183*** (2013.01); *A47B 2021/066* (2013.01); *A47B 2083/006* (2013.01)

(56) **References Cited**

U.S. PATENT DOCUMENTS

1,428,629	A	9/1922	Gunn
D100,987	S	8/1936	Colen
D142,121	S	8/1945	Ristenpart
2,480,393	A	8/1949	Bossert et al.
2,489,933	A	11/1949	Schwarz, Jr.
D158,160	S	4/1950	Viola
D158,522	S	5/1950	Smith et al.
2,712,972	A	7/1955	Manson et al.
3,053,598	A	9/1962	Cheslow
3,128,344	A	4/1964	Goold
3,177,594	A	4/1965	Demo
3,342,147	A	9/1967	Shettles
D209,841	S	1/1968	Bue et al.
D209,911	S	1/1968	Cooper
3,549,200	A	12/1970	Cooper
3,636,892	A	1/1972	Linton
3,637,268	A	1/1972	Walter
3,741,852	A	6/1973	Keener
D245,465	S	8/1977	Hindle
4,050,165	A	9/1977	Yamauchi et al.
4,155,609	A	5/1979	Skafte et al.
4,323,291	A	4/1982	Ball
4,382,642	A	5/1983	Burdick
4,382,643	A	5/1983	Heinrich
4,409,906	A	10/1983	Alneng
4,516,156	A	5/1985	Fabris et al.
4,562,482	A	12/1985	Brown
4,612,863	A	9/1986	Vonhausen et al.
4,619,427	A	10/1986	Leymann
4,659,048	A	4/1987	Fahrion
D293,403	S	12/1987	Umanoff et al.
4,725,106	A	2/1988	Shields et al.
4,732,088	A	3/1988	Koechlin et al.
4,735,467	A	4/1988	Wolters
D295,630	S	5/1988	Wells-Papanek et al.
4,758,887	A	7/1988	Engel et al.
4,785,472	A	11/1988	Shapiro
4,817,903	A	4/1989	Braehler et al.
4,836,478	A	6/1989	Sweere
4,838,177	A	6/1989	Vander Park
4,852,500	A	8/1989	Ryburg et al.
4,876,657	A	10/1989	Saito et al.
4,922,835	A	5/1990	Van Vliet et al.
4,974,173	A	11/1990	Stefik et al.
4,974,913	A	12/1990	Vogt et al.
4,996,110	A	2/1991	Tanuma et al.
5,035,392	A	7/1991	Gross et al.
5,065,832	A	11/1991	Mark
D322,857	S	12/1991	Bacus
5,104,087	A	4/1992	Wentzloff et al.
5,121,698	A	6/1992	Kelley
5,122,941	A	6/1992	Gross et al.
5,131,849	A	7/1992	Perrero
D331,060	S	11/1992	Emmons et al.
D335,281	S	5/1993	Thummel
5,239,373	A	8/1993	Tang et al.
5,261,735	A	11/1993	Cohen et al.
5,321,579	A	6/1994	Brown et al.
5,328,145	A	7/1994	Charapich
5,351,241	A	9/1994	Yehonatan
5,352,033	A	10/1994	Gresham et al.
5,382,972	A	1/1995	Kannes
5,392,400	A	2/1995	Berkowitz et al.
D359,405	S	6/1995	Ball
5,438,937	A	8/1995	Ball et al.
5,442,788	A	8/1995	Bier
5,465,370	A	11/1995	Ito et al.
D367,857	S	3/1996	Emmerik
5,500,671	A	3/1996	Andersson et al.
D368,721	S	4/1996	Howell et al.
5,503,891	A	4/1996	Marshall et al.
5,522,324	A	6/1996	van Gelder et al.
5,549,267	A	8/1996	Armbruster et al.
5,557,725	A	9/1996	Ansberry et al.
D375,909	S	11/1996	Dziersk et al.
D376,790	S	12/1996	Goulet et al.
5,595,126	A	1/1997	Yeh
5,634,018	A	5/1997	Tanikoshi et al.
5,638,758	A	6/1997	Carr
D381,662	S	7/1997	Weissberg et al.
D382,307	S	8/1997	Sharpe, III et al.
5,655,822	A	8/1997	Roberts et al.
5,687,499	A	11/1997	Brnjac
5,701,981	A	12/1997	Marshall et al.
D388,639	S	1/1998	Dormon et al.
D390,381	S	2/1998	Dormon et al.
D392,361	S	3/1998	Cooper
5,724,778	A	3/1998	Cornell et al.
D393,382	S	4/1998	Rutter et al.
5,735,220	A	4/1998	Wang
5,738,316	A	4/1998	Sweere et al.
5,765,315	A	6/1998	Nagamitsu et al.
5,767,897	A	6/1998	Howell
5,797,666	A	8/1998	Park
D399,501	S	10/1998	Arora et al.
5,831,211	A	11/1998	Gartung et al.
5,918,841	A	7/1999	Sweere et al.
D413,212	S	8/1999	Dame et al.
5,943,966	A	8/1999	Machado et al.
5,967,058	A	10/1999	Ambrose et al.
5,988,076	A	11/1999	Vander Park
5,999,208	A	12/1999	McNerney et al.
D418,837	S	1/2000	Ishii
6,012,398	A	1/2000	Boyce
6,057,835	A	5/2000	Sato et al.
6,060,993	A	5/2000	Cohen
6,072,522	A	6/2000	Ippolito et al.
6,076,903	A	6/2000	Vander Park
D427,993	S	7/2000	Seal
6,091,408	A	7/2000	Treibitz et al.
D435,361	S	12/2000	Goza
6,158,358	A	12/2000	Prendergast
6,160,573	A	12/2000	Allen et al.
6,161,487	A	12/2000	Chang
D435,835	S	1/2001	Steck
6,168,127	B1	1/2001	Saylor et al.
6,170,200	B1	1/2001	Cornell et al.
6,170,926	B1	1/2001	Roberts et al.
6,182,580	B1	2/2001	Barrett et al.
6,182,581	B1	2/2001	Boyce
6,189,268	B1	2/2001	Carr et al.
6,199,101	B1	3/2001	Pfaff
6,201,859	B1	3/2001	Memhard et al.
6,203,053	B1	3/2001	Sohrt et al.
6,216,606	B1	4/2001	Kathardekar et al.
6,249,281	B1	6/2001	Chen et al.
6,254,206	B1	7/2001	Petrick et al.

(56) **References Cited**

U.S. PATENT DOCUMENTS

6,266,691 B1 7/2001 Watanabe et al.
6,267,064 B1 7/2001 Ostertag et al.
D448,018 S 9/2001 Arjomand et al.
6,283,043 B1 9/2001 Stern et al.
6,286,794 B1 9/2001 Harbin
6,288,753 B1 9/2001 DeNicola et al.
6,298,794 B1 10/2001 Brown et al.
D452,692 S 1/2002 Fukuda
6,359,711 B1 3/2002 Cole et al.
D456,155 S 4/2002 DeVriendt
6,363,866 B1 4/2002 Schwartz
6,374,547 B1 4/2002 Baloga et al.
6,382,109 B1 5/2002 Novikoff
6,394,402 B2 5/2002 Coonan et al.
6,415,723 B1 7/2002 Kopish et al.
D461,822 S 8/2002 Okuley
6,427,389 B1 8/2002 Branc et al.
6,435,106 B2 8/2002 Funk et al.
D463,439 S 9/2002 Olivo
6,443,073 B1 9/2002 Tsang et al.
6,443,415 B1 9/2002 Sundblad
6,453,826 B1 9/2002 Fookes et al.
6,497,184 B1 12/2002 Whitesitt
6,554,433 B1 4/2003 Holler
6,574,674 B1 6/2003 Mairs et al.
6,588,346 B1 7/2003 Bockheim et al.
6,598,542 B2 7/2003 Goldberg et al.
6,609,691 B2 8/2003 Oddsen, Jr.
6,614,451 B1 9/2003 Hudson et al.
6,629,505 B1 10/2003 Cronk et al.
6,662,210 B1 12/2003 Carleton et al.
6,662,734 B2 12/2003 Chang
D484,886 S 1/2004 Matsuoka
6,681,529 B1 1/2004 Baloga et al.
6,695,270 B1 2/2004 Smed
D487,469 S 3/2004 Glaser et al.
6,714,172 B2 3/2004 Matsuzaki et al.
6,725,784 B2 4/2004 Crinion
6,728,753 B1 4/2004 Parasnis et al.
D492,311 S 6/2004 Suzuki
6,751,914 B2 6/2004 Zeh et al.
D493,177 S 7/2004 Retuta et al.
6,774,460 B1 8/2004 Herbert et al.
6,780,047 B1 8/2004 Laity et al.
6,791,575 B2 9/2004 Abboud
6,816,129 B1 11/2004 Zimmerman
6,831,676 B2 12/2004 Monroe
D500,766 S 1/2005 Hanisch et al.
6,848,741 B2 2/2005 Ford et al.
D505,135 S 5/2005 Sapp et al.
6,892,650 B2 5/2005 Baloga et al.
D507,002 S 7/2005 Retuta et al.
6,931,795 B1 8/2005 Baloga et al.
D509,221 S 9/2005 Suber et al.
D512,064 S 11/2005 Li
6,990,909 B2 1/2006 Gosling et al.
7,016,935 B2 3/2006 Lee et al.
7,032,523 B2 4/2006 Forslund, III et al.
7,058,891 B2 6/2006 O'Neal et al.
D524,291 S 7/2006 Tsang
D526,973 S 8/2006 Gates et al.
7,092,002 B2 8/2006 Ferren et al.
D528,545 S 9/2006 Crews
7,113,201 B1 9/2006 Taylor et al.
7,119,829 B2 10/2006 Leonard et al.
7,121,670 B2 10/2006 Salvatori et al.
7,125,088 B2 10/2006 Haberman
7,131,068 B2 10/2006 O'Neal et al.
D531,998 S 11/2006 El Sayed et al.
7,134,079 B2 11/2006 Brown et al.
7,148,906 B2 12/2006 Sakashita et al.
7,207,278 B2 4/2007 Latino et al.
D542,280 S 5/2007 Taylor
7,233,318 B1 6/2007 Farag et al.
7,240,287 B2 7/2007 Qureshi et al.
7,278,360 B2 10/2007 Griepentrog
D558,767 S 1/2008 Solland
7,317,446 B1 1/2008 Murphy
7,373,605 B2 5/2008 Schaper
7,428,000 B2 9/2008 Cutler et al.
D580,413 S 11/2008 Tsao
7,454,708 B2 11/2008 O'Neal et al.
D581,927 S 12/2008 Sumii
7,493,565 B2 2/2009 Parupudi et al.
D589,046 S 3/2009 Pascucci
D589,497 S 3/2009 Andre et al.
7,500,795 B2 3/2009 Sandhu
D590,391 S 4/2009 Sumii
D596,622 S 7/2009 Lee
7,558,823 B2 7/2009 Beers et al.
D598,008 S 8/2009 Shimizu
D598,018 S 8/2009 Sumii
D599,323 S 9/2009 Petersen
D600,694 S 9/2009 Sumii
D601,564 S 10/2009 Maeno
D602,915 S 10/2009 Song et al.
D602,916 S 10/2009 Won et al.
D603,457 S 11/2009 Julskjer et al.
D606,519 S 12/2009 Painter
D606,979 S 12/2009 Henry
7,679,638 B2 3/2010 Eshkoli et al.
D617,847 S 6/2010 Royer, II et al.
7,734,802 B1 6/2010 Gay et al.
7,761,505 B2 7/2010 Krzyzanowski et al.
D624,518 S 9/2010 Li
D625,295 S 10/2010 Nogueira et al.
7,830,409 B2 11/2010 Hwang et al.
7,876,287 B2 1/2011 McLarty et al.
D632,265 S 2/2011 Choi et al.
7,922,267 B2 4/2011 Gevaert
7,926,430 B2 4/2011 Bakker et al.
D639,784 S 6/2011 Murayama et al.
D644,242 S 8/2011 Matas
D644,243 S 8/2011 Matas
D651,215 S 12/2011 Anzures et al.
8,074,581 B2 12/2011 Epstein et al.
D653,262 S 1/2012 O'Donnell et al.
8,117,547 B2 2/2012 Parupudi et al.
8,138,942 B2 3/2012 Otsuka et al.
8,212,779 B2 7/2012 Chiang
D666,175 S 8/2012 Yamada
D666,176 S 8/2012 Yamada
8,395,713 B2 3/2013 Kondo et al.
D685,790 S 7/2013 Tang
D697,475 S 1/2014 Regole
D700,904 S 3/2014 Miller et al.
8,896,656 B2 11/2014 Epstein et al.
D726,161 S 4/2015 Howard et al.
D729,773 S 5/2015 Salojarvi et al.
D736,166 S 8/2015 Kuh et al.
D747,229 S 1/2016 Perez
D748,078 S 1/2016 Nardin et al.
2001/0005201 A1 6/2001 Digiorgio et al.
2002/0011197 A1 1/2002 Akyuz
2002/0037668 A1 3/2002 Tseng et al.
2002/0083137 A1 6/2002 Rogers et al.
2002/0132216 A1 9/2002 Dohrmann
2002/0149566 A1 10/2002 Sarkissian
2002/0186236 A1 12/2002 Brown et al.
2002/0194792 A1 12/2002 Feldpausch et al.
2003/0011467 A1 1/2003 Suomela
2003/0098819 A1 5/2003 Sukthankar et al.
2004/0150752 A1* 8/2004 Iwase H04N 9/76
348/584
2004/0201628 A1 10/2004 Johanson et al.
2004/0227692 A1 11/2004 Yoon
2005/0126446 A1 6/2005 Nobles et al.
2006/0000955 A1 1/2006 Cvek
2006/0044148 A1 3/2006 Daniels et al.
2006/0244817 A1 11/2006 Harville et al.
2006/0267726 A1 11/2006 Arai et al.
2007/0040900 A1 2/2007 Castles
2007/0054735 A1 3/2007 Palermo
2007/0080818 A1 4/2007 Yun et al.

(56) **References Cited**

U.S. PATENT DOCUMENTS

2007/0106950	A1	5/2007	Hutchinson et al.	
2007/0165193	A1	7/2007	Kubo et al.	
2007/0242129	A1	10/2007	Ferren et al.	
2007/0266266	A1*	11/2007	Dubinsky	G06F 1/3203 713/300
2008/0074343	A1*	3/2008	Sasser	G06F 3/14 345/1.1
2008/0172695	A1	7/2008	Migos et al.	
2008/0194942	A1	8/2008	Cumpson et al.	
2008/0266380	A1	10/2008	Gorzynski et al.	
2008/0307324	A1	12/2008	Westen et al.	
2009/0037821	A1	2/2009	O'Neal et al.	
2009/0044116	A1	2/2009	Kitabayashi	
2009/0055760	A1	2/2009	Whatcott et al.	
2009/0121905	A1	5/2009	Griffin, Jr. et al.	
2009/0184924	A1	7/2009	Uchida	
2010/0073454	A1	3/2010	Lovhaugen et al.	
2010/0302130	A1	12/2010	Kikuchi et al.	
2010/0312366	A1	12/2010	Madonna et al.	
2011/0025819	A1	2/2011	Gorzynski et al.	
2012/0081277	A1	4/2012	de Paz	
2012/0209935	A1	8/2012	Harter et al.	
2012/0324047	A1	12/2012	Diner et al.	
2015/0022342	A1	1/2015	Will et al.	
2015/0144034	A1	5/2015	Epstein et al.	
2015/0296061	A1	10/2015	Geiger et al.	
2016/0028993	A1	1/2016	Epstein et al.	

FOREIGN PATENT DOCUMENTS

DE	19652108	A1	6/1998
DE	29910262	U1	8/1999
EP	0223091	A2	5/1987
EP	0230236	A1	7/1987
EP	0264589	A2	4/1988
EP	0992921	A2	4/2000
EP	0801342	B1	1/2003
GB	2365662	A	2/2002
JP	11332674	A	12/1999
JP	2000236329	A	8/2000
JP	2006122645	A	5/2006
WO	0017737	A1	3/2000
WO	0131397	A1	5/2001
WO	0212992	A2	2/2002

OTHER PUBLICATIONS

Stone, Office Space: Designing Your Next Office—A Workplace That Will Know Who You Are, Where You Are and What You're Doing, Newsweek, Apr. 19, 2003, 2 pages, http://msnbc.msn.com/id/3068812/.

Microsoft Corporation, Enhanced Microsoft Exhibit Offers Sneak Peek at Office of the Future, Mar. 22, 2004, 6 pages, http://www.microsoft.com/presspass/features/2004/mar04/03-22CIW.asp.

Coursey, Microsoft's Vision of Tomorrow Sparks Wonder, Fear, eWEEK.com, Jul. 12, 2004, 3 pages, http://www.eweek.com/print_article/0,1761,a=131281,00.asp.

Polycom, Polycom RealPresence Experience (RPX) User Guide, Feb. 2007 Edition, Version 1.0, 3 pages.

Elecom, DTS-TS8 (Japanese), 2 pages.

Coeno-Storyboard: An Augmented Surface for Storyboard Presentations, c 2005, Medientechnik und—design, 14 pages.

Brunswick, The Frameworx Line: Center Design and Functionality that Works for Everyone, http://www.brunswickbowling.com/frameworx_line, Jul. 2, 2007, 4 pages.

Polycom, Administrator's Guide for the VSX Series, Feb. 2007 Edition, Version 8.5.3, 3 pages.

European Patent Office, Extended European Search Report, Application No. 08252300.2, Oct. 4, 2011.

European Patent Office, Communication, Application No. 08252300.2, May 7, 2014.

* cited by examiner

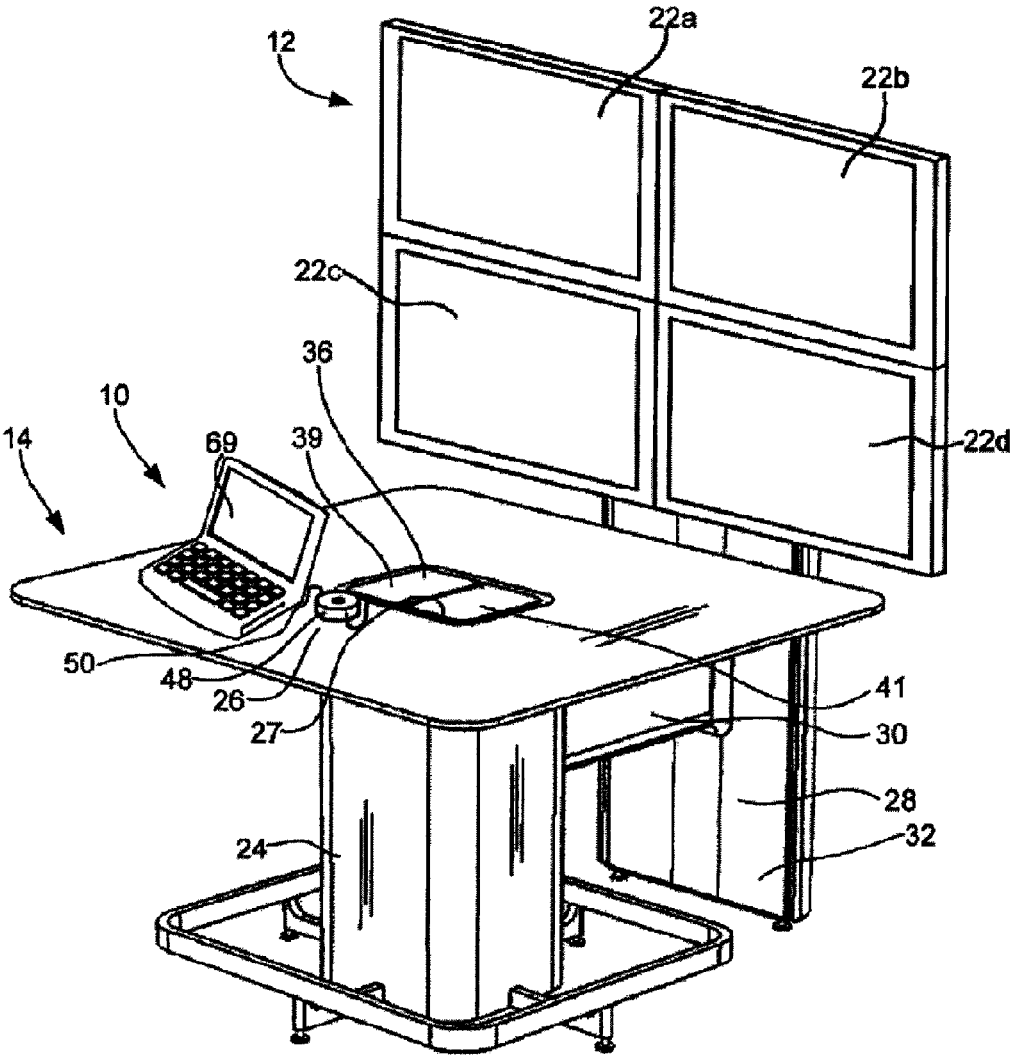

FIG. 1

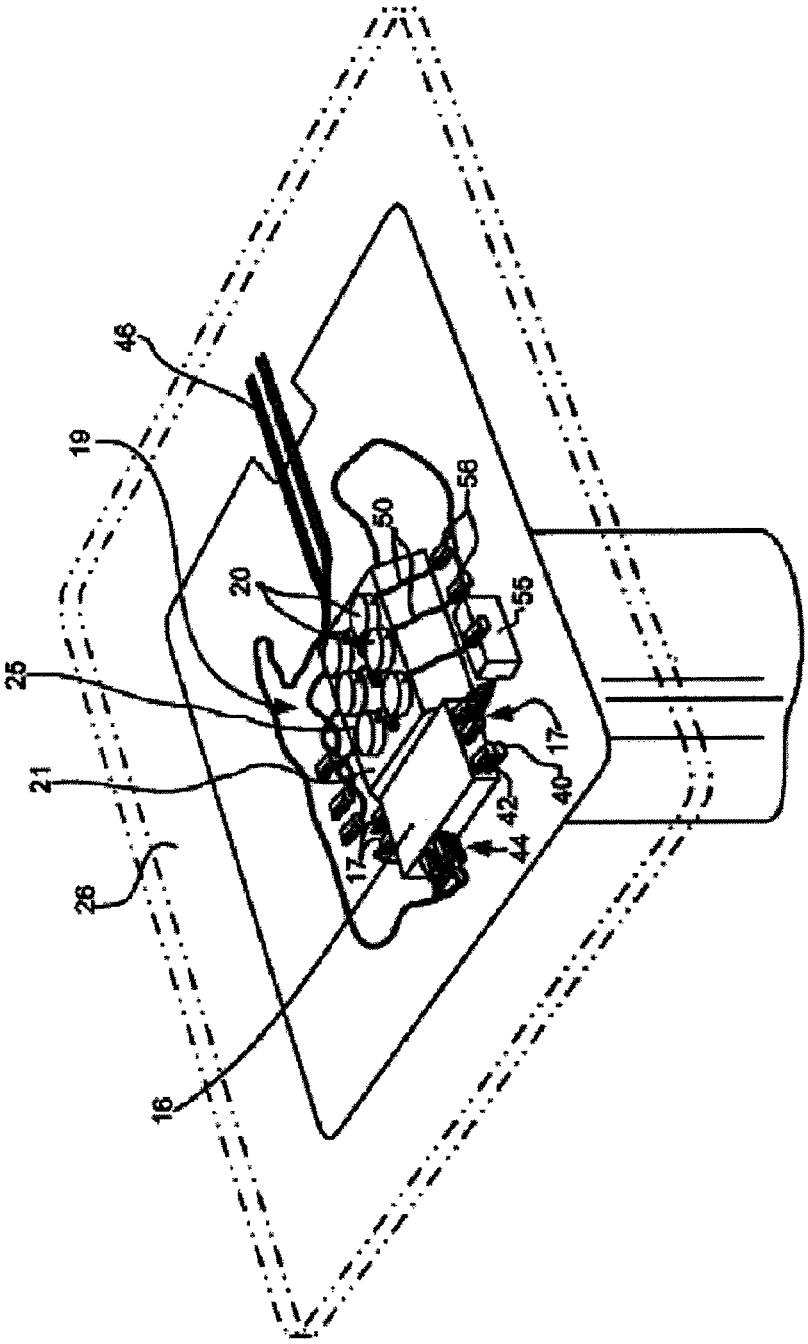

FIG. 2

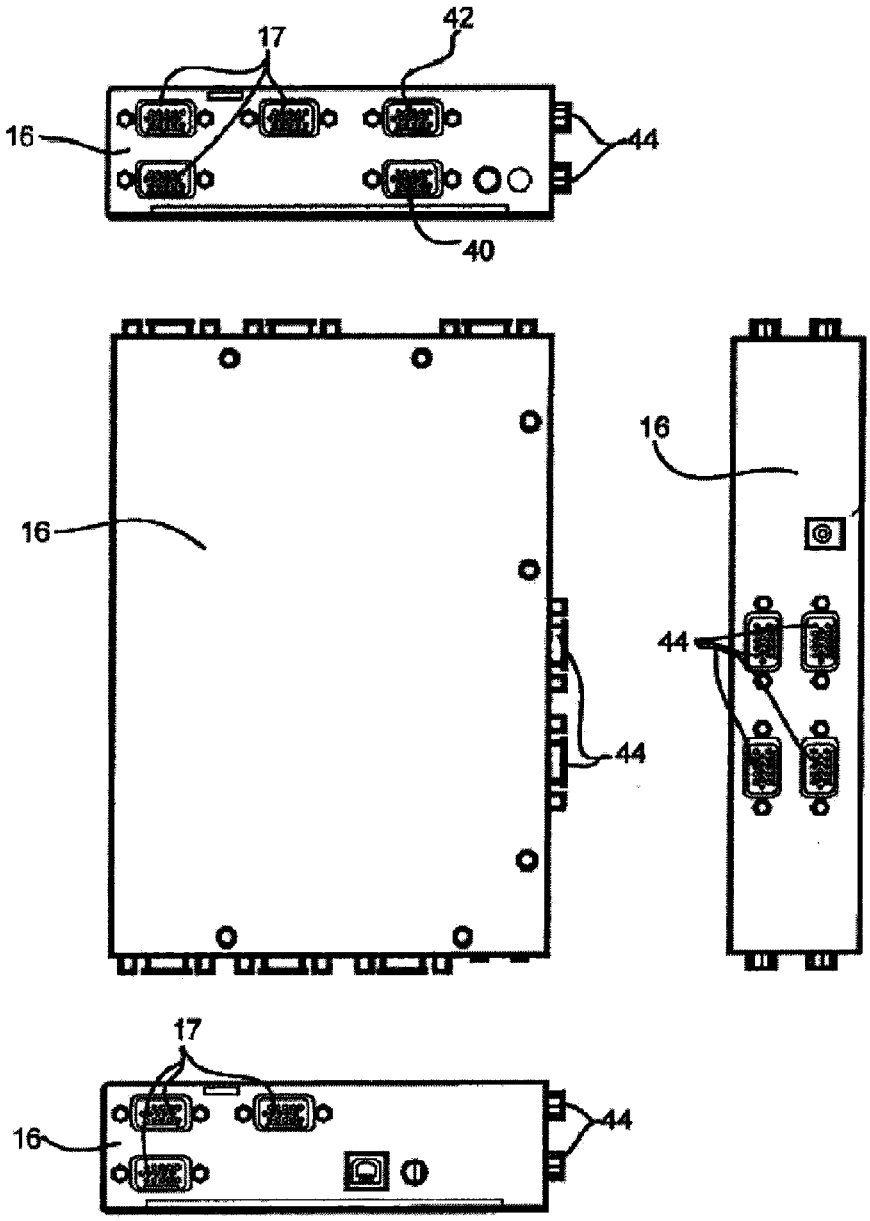

FIG. 3

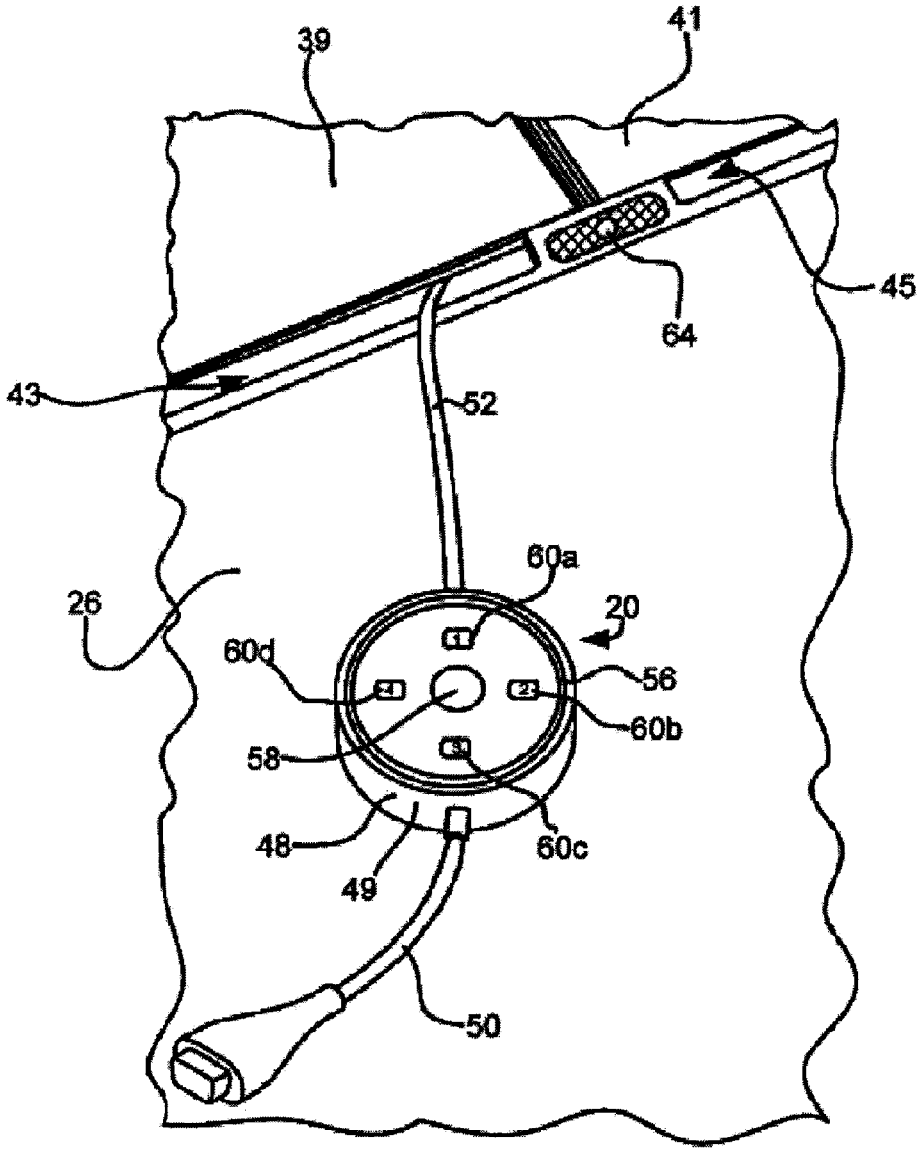

FIG. 4

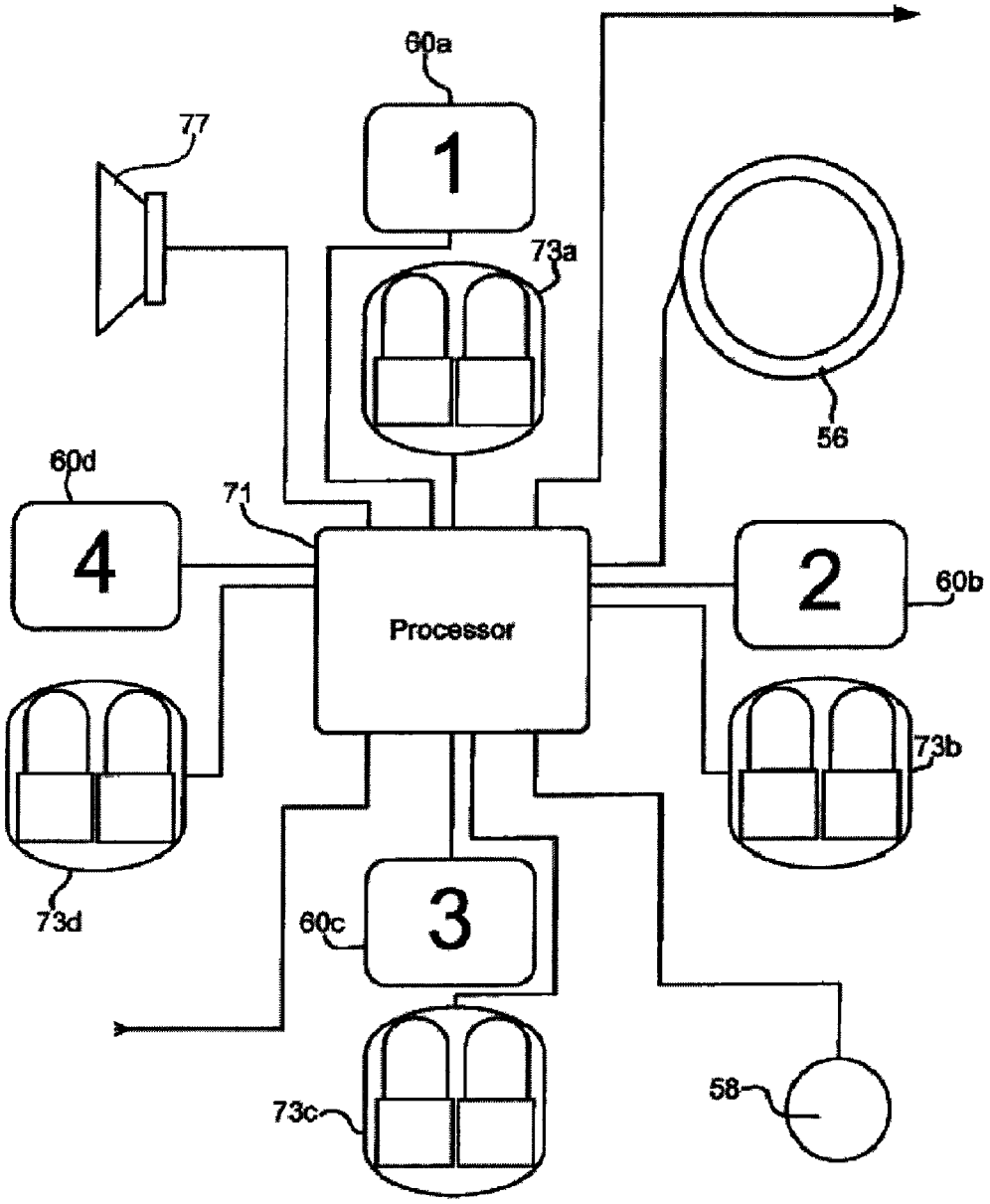

FIG. 5

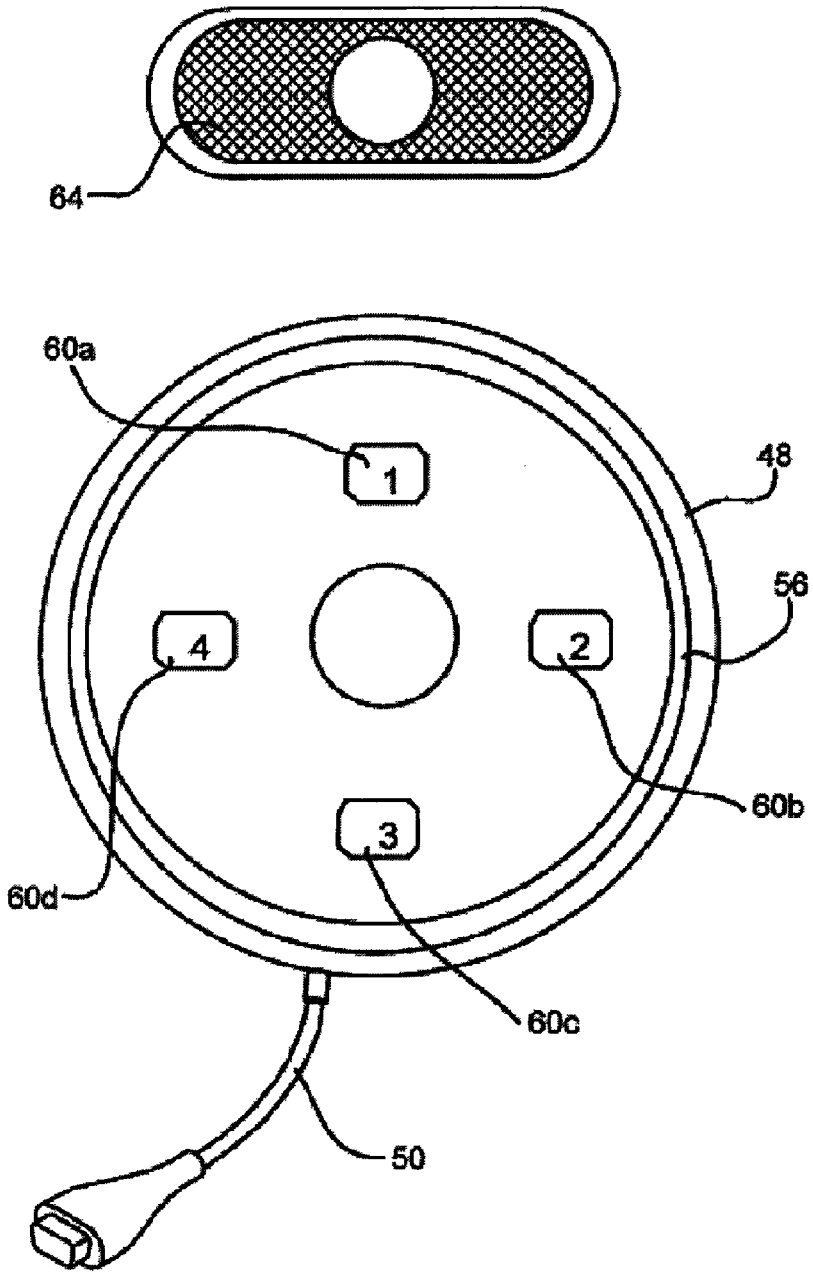

FIG. 6

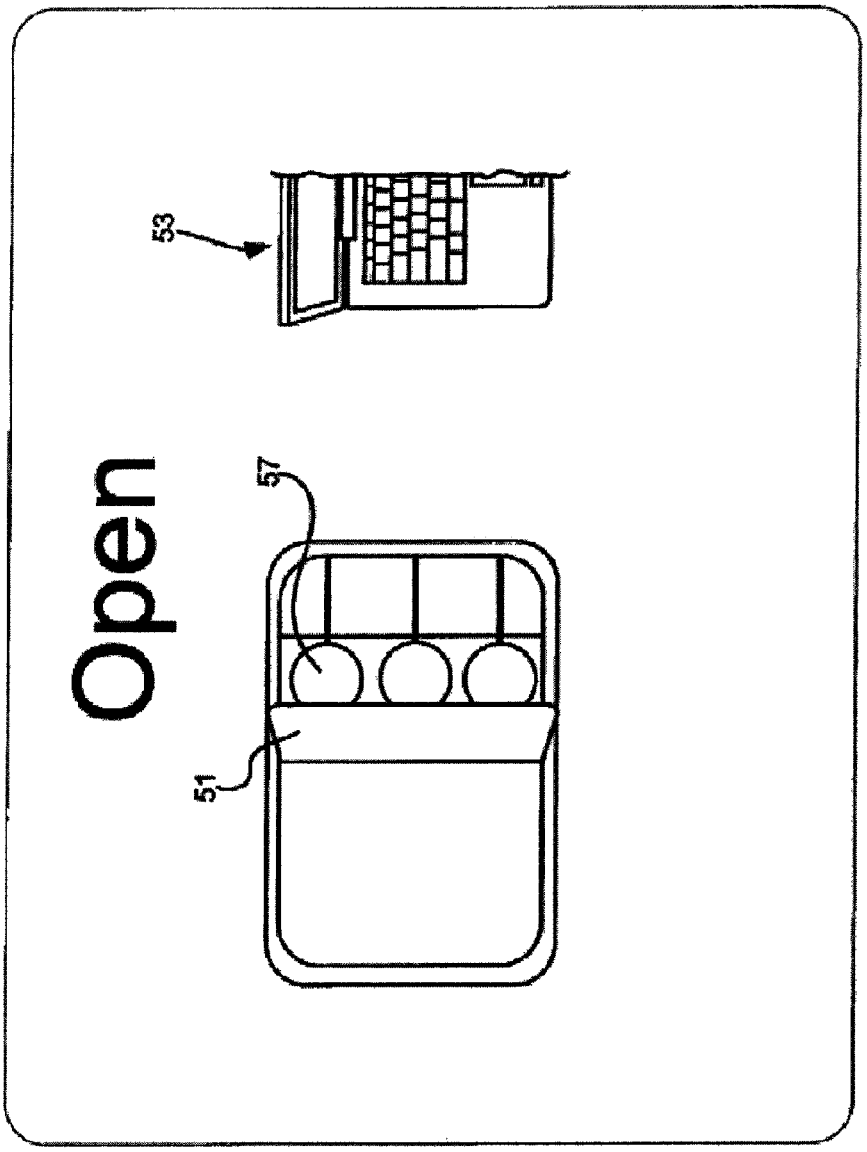

FIG. 7

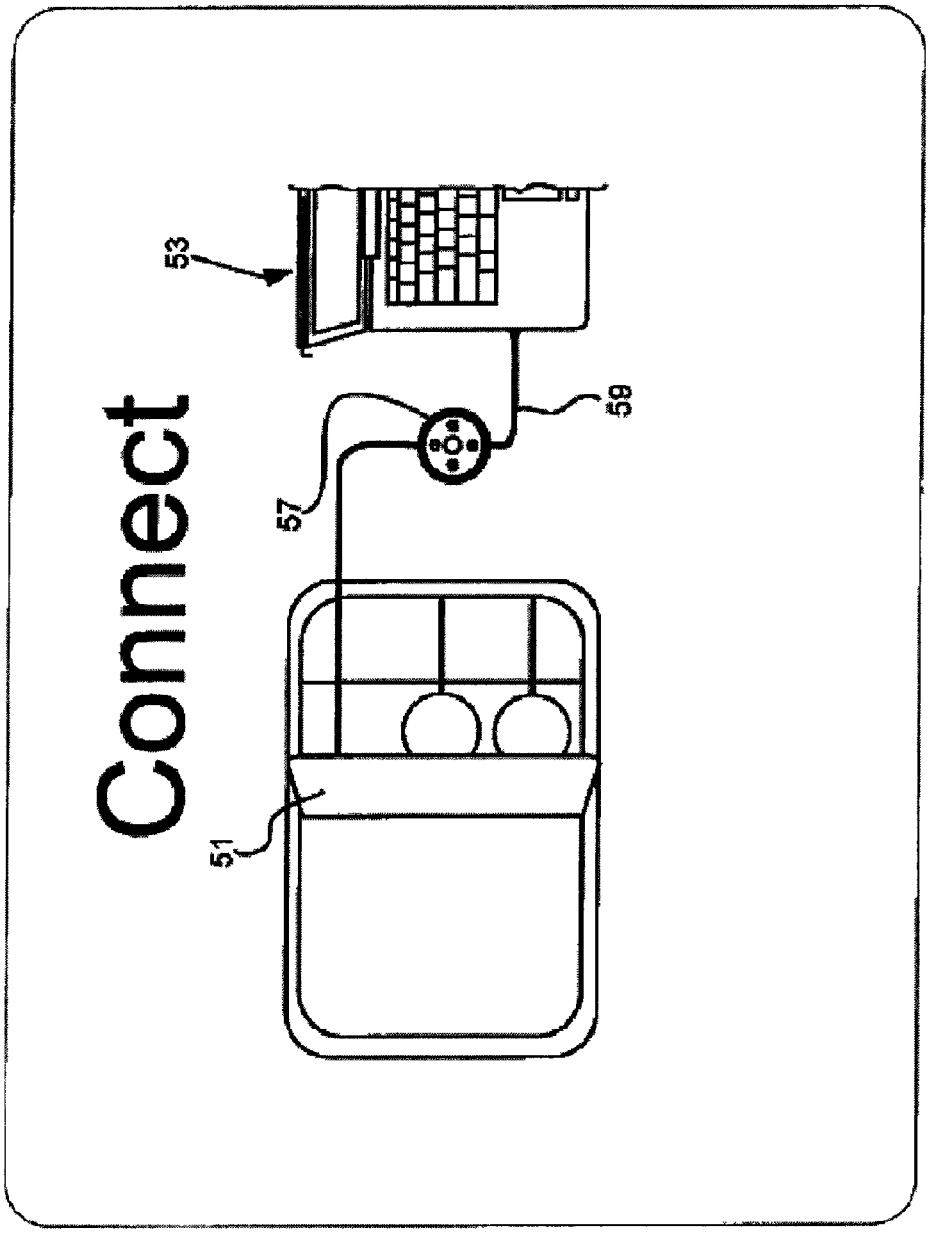

FIG. 8

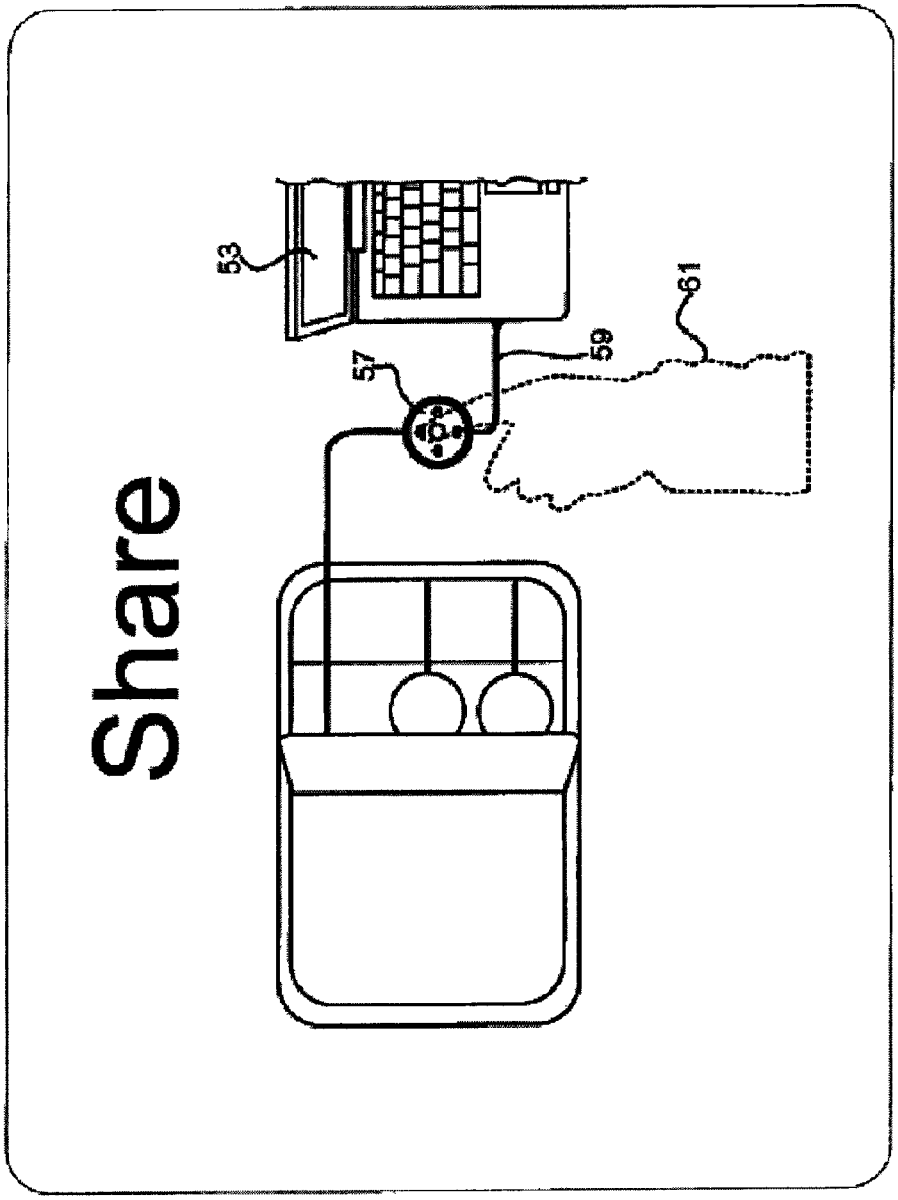

FIG. 9

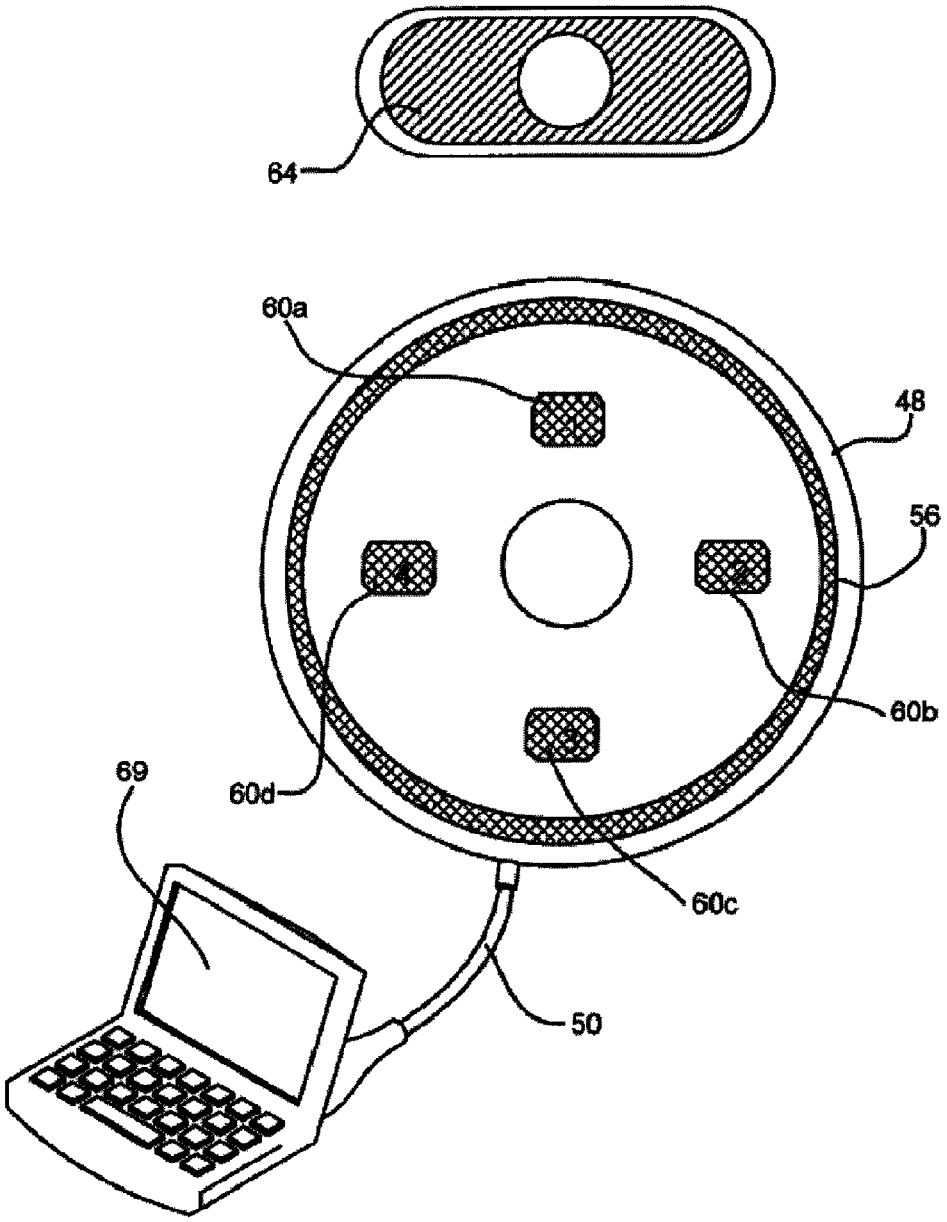

FIG. 10

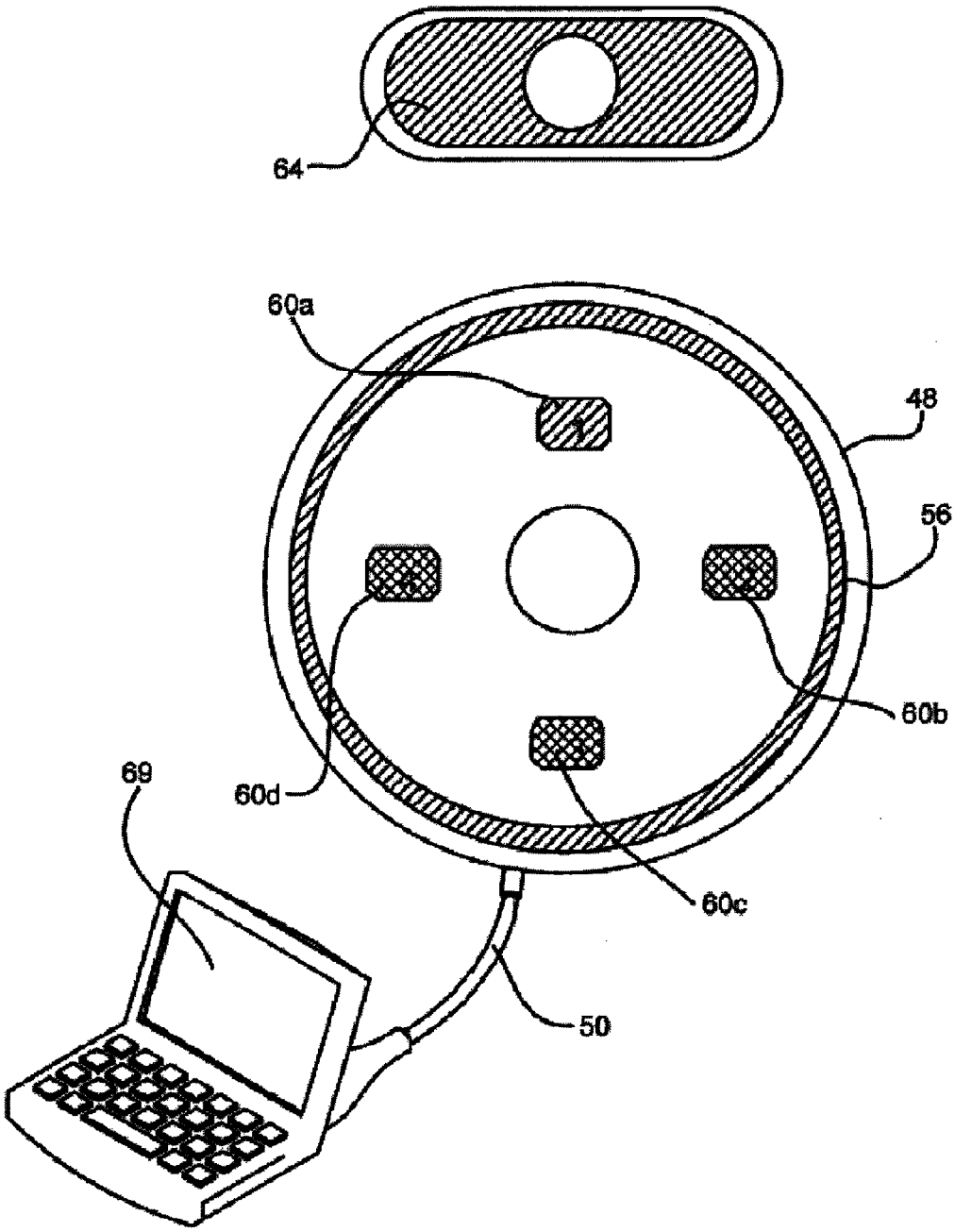

FIG. 11

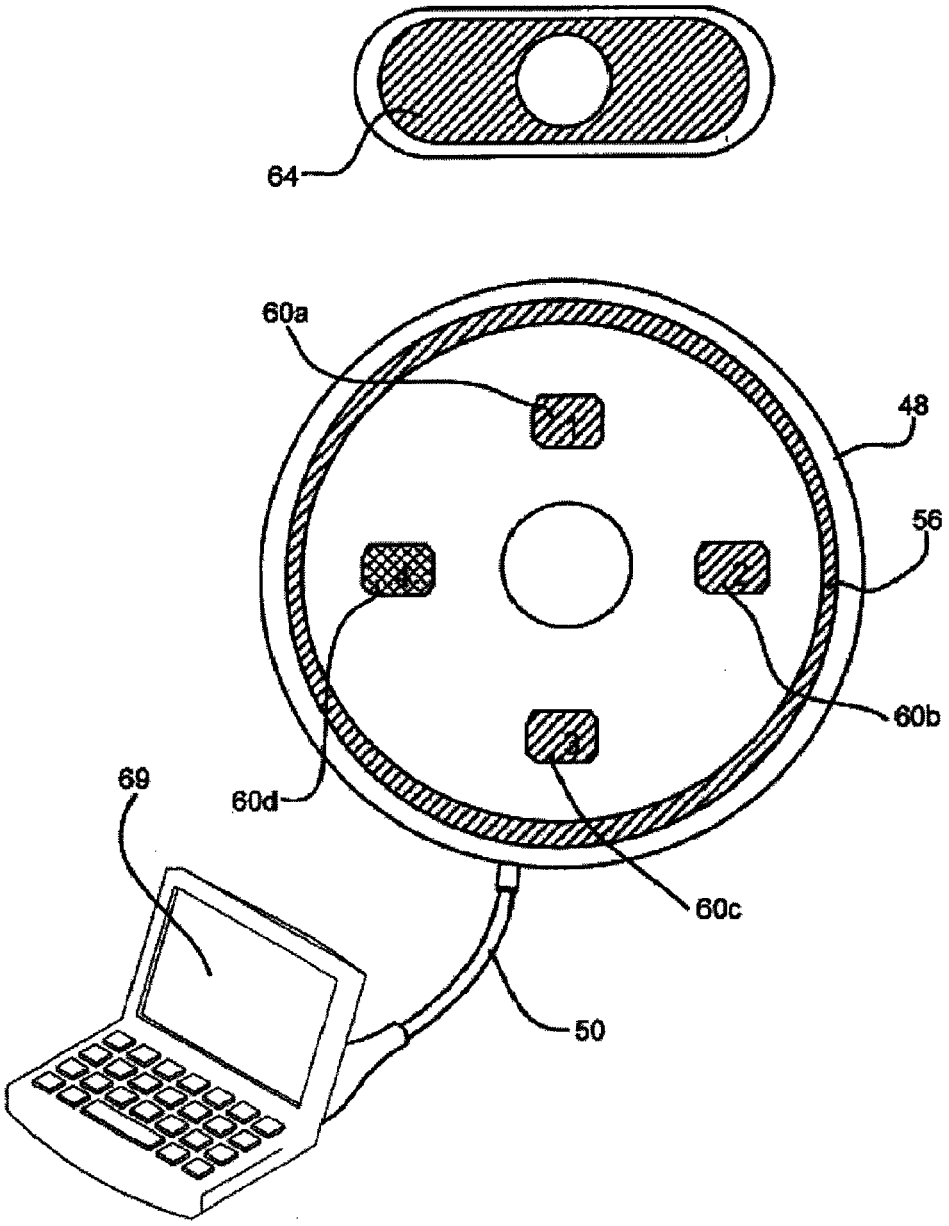

FIG. 12

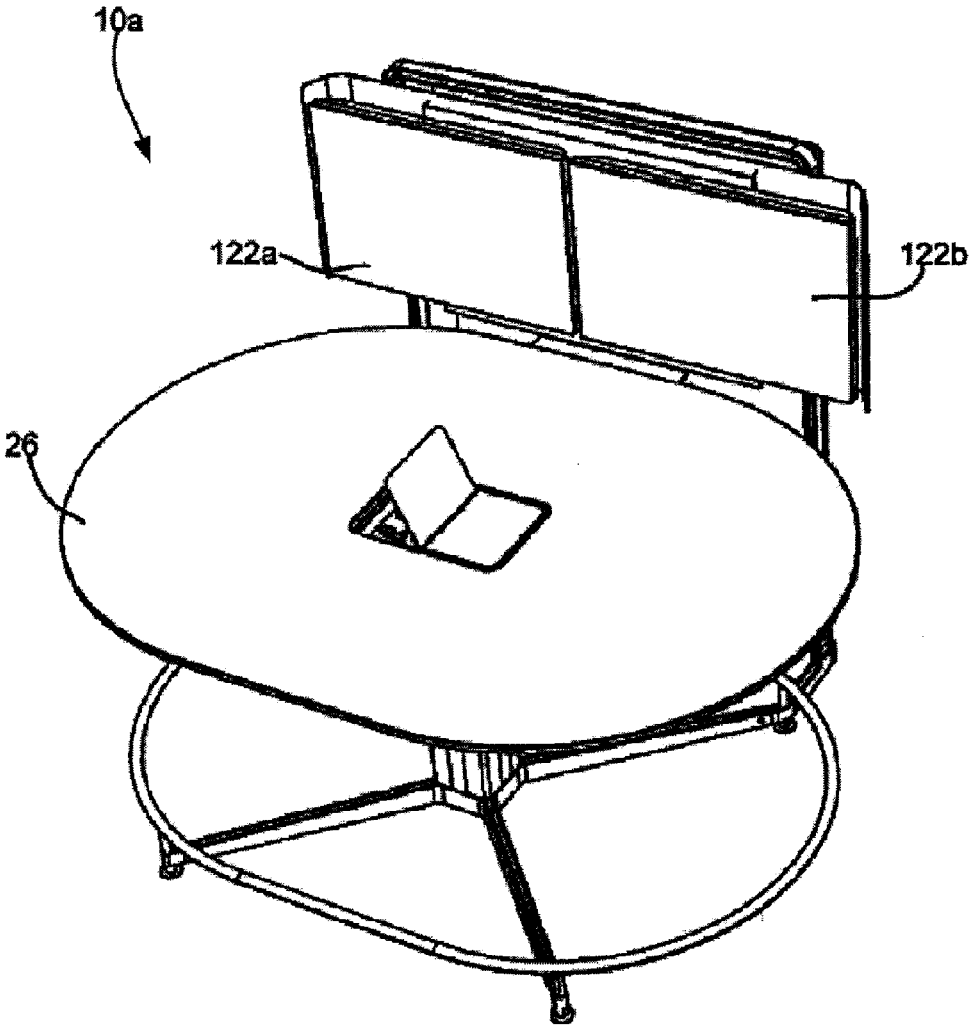

FIG. 13

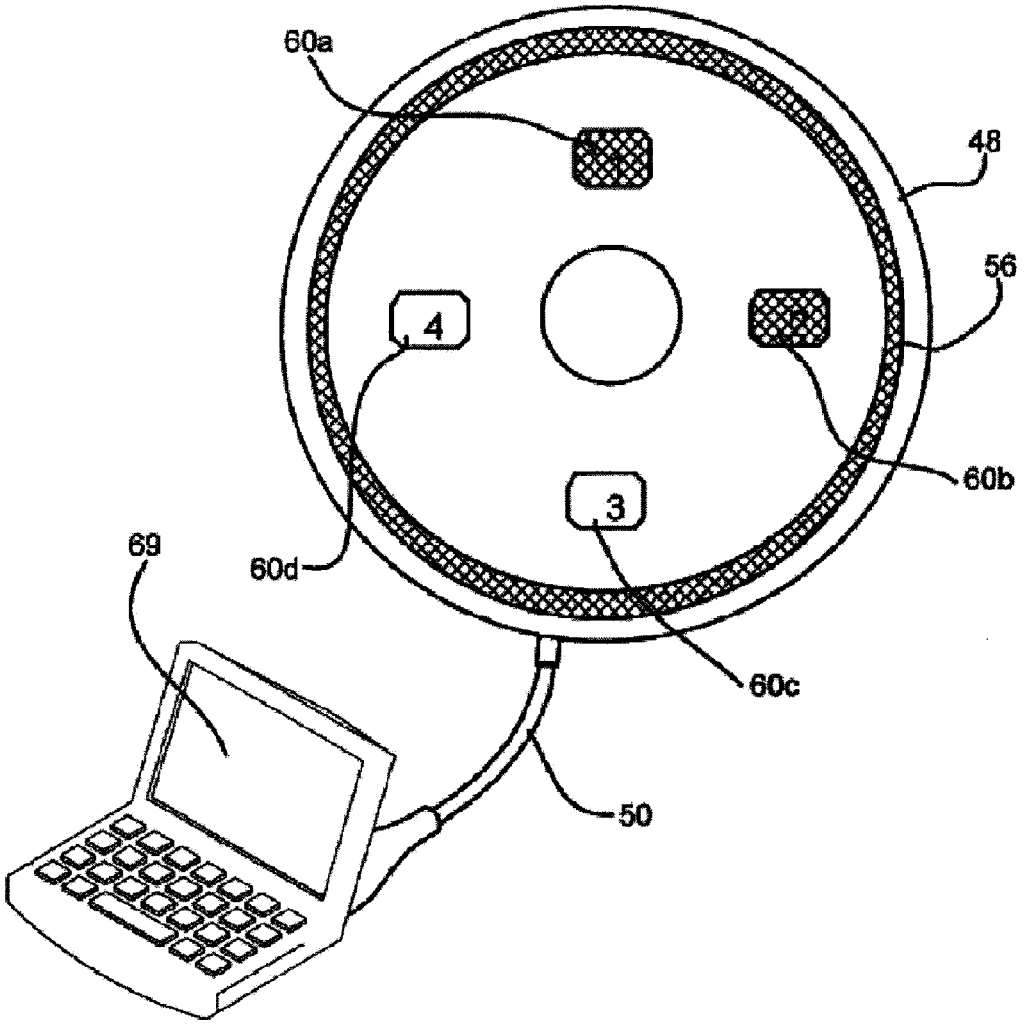

FIG. 14

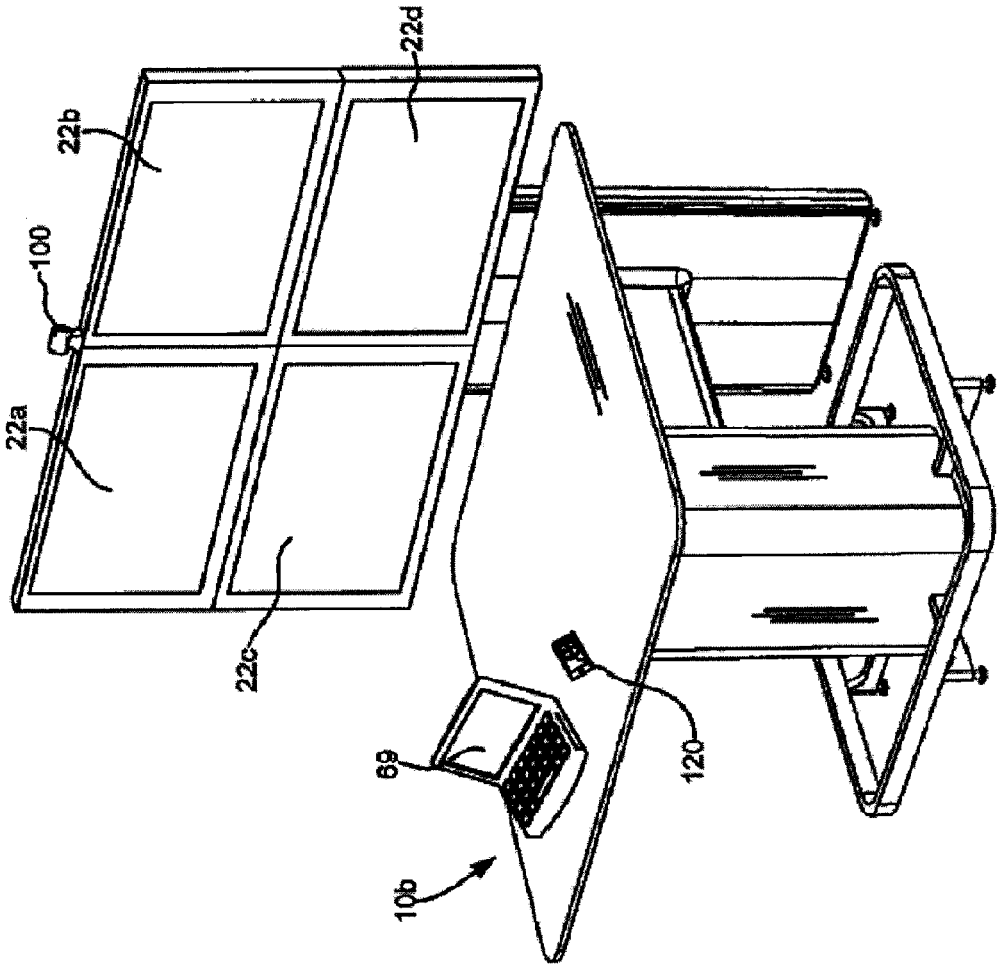

FIG. 15

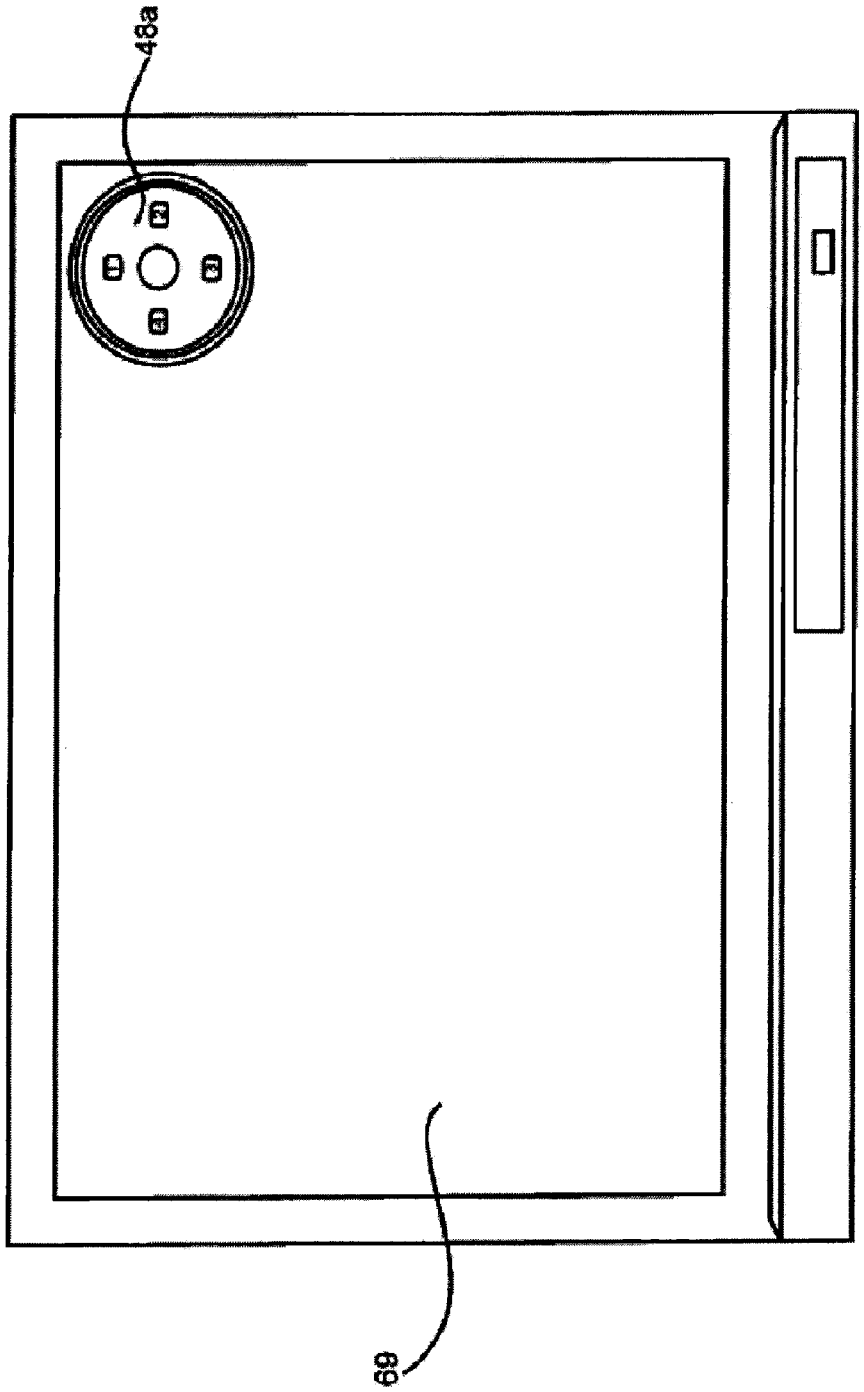

FIG. 16

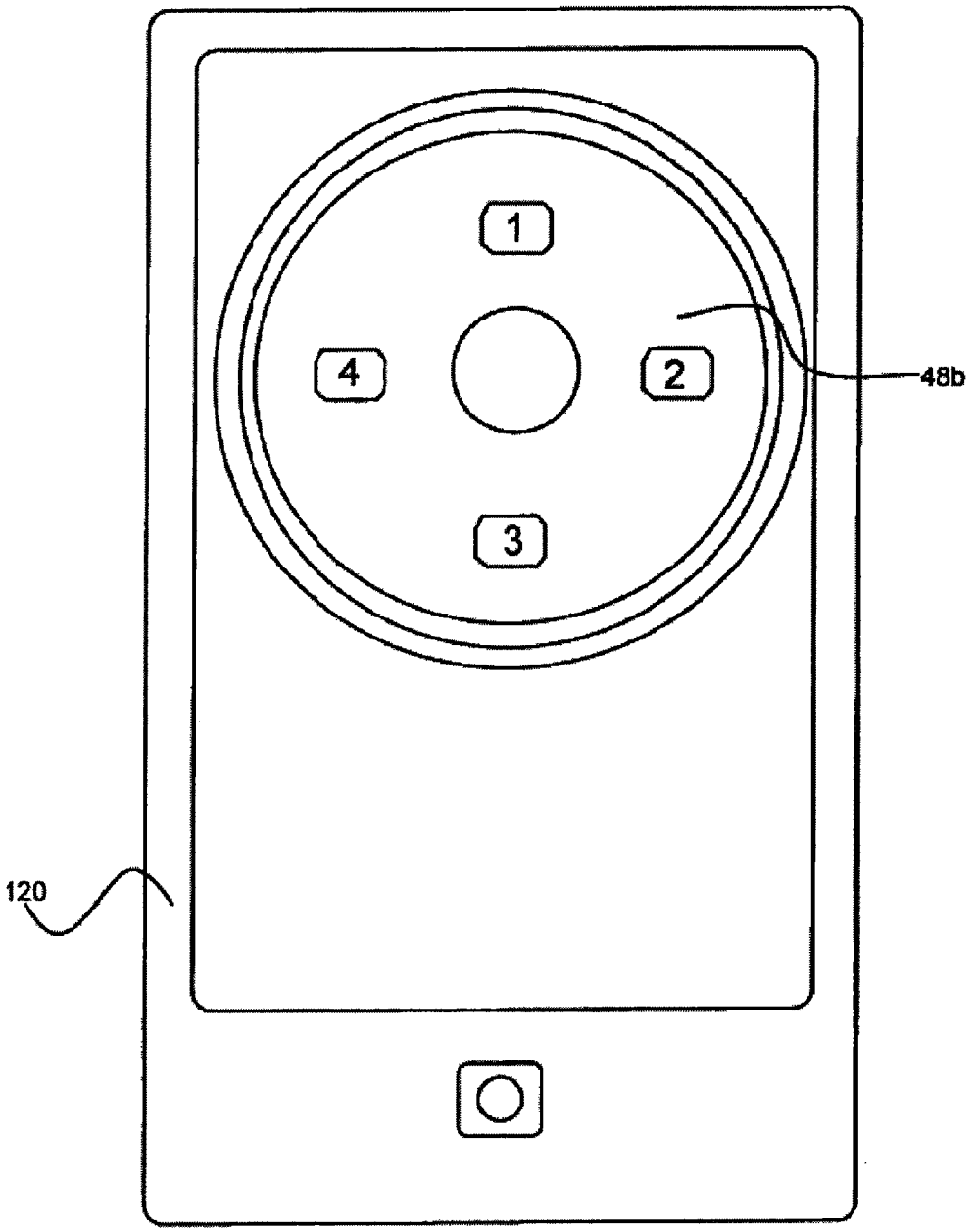

FIG. 17

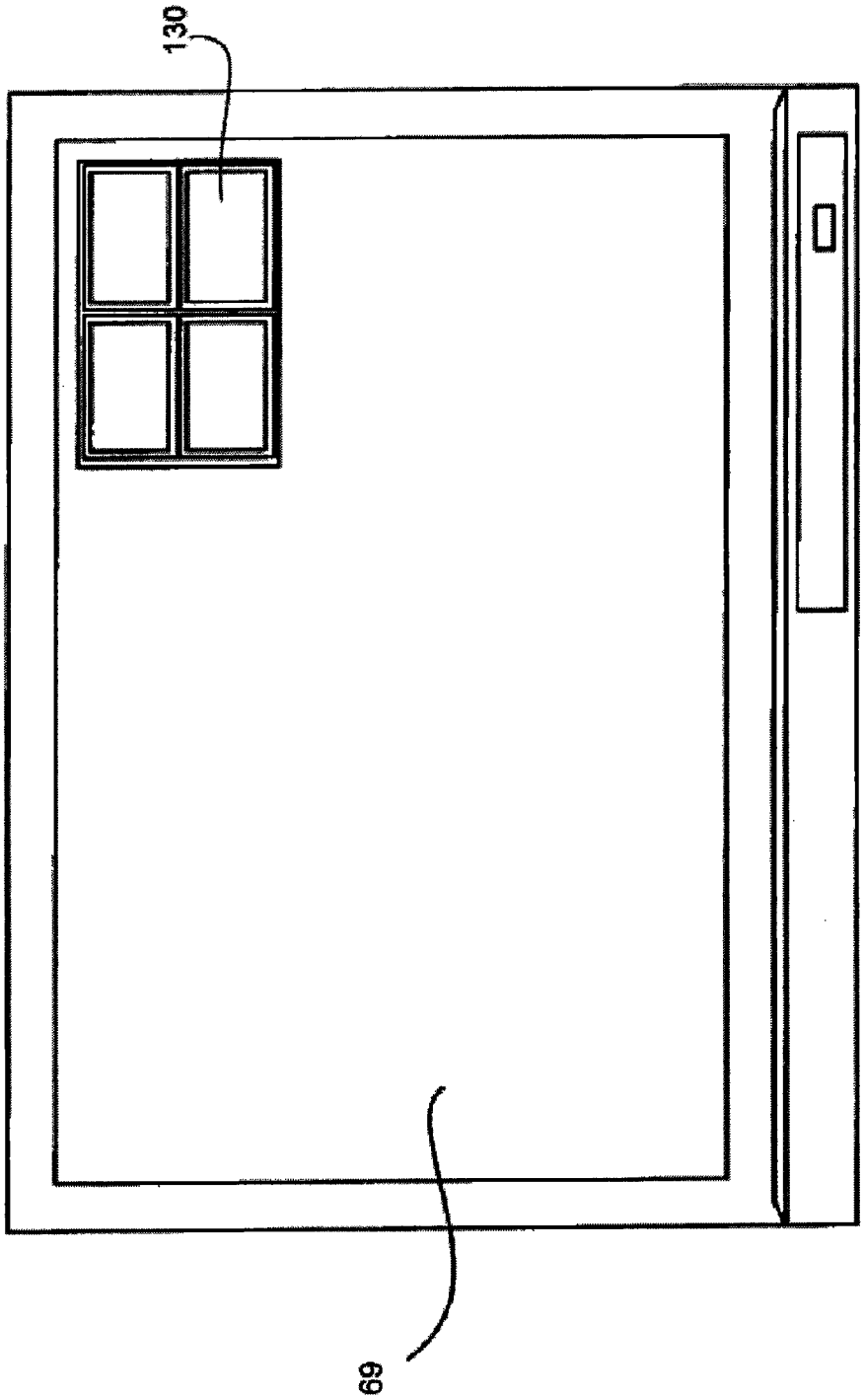

FIG. 18

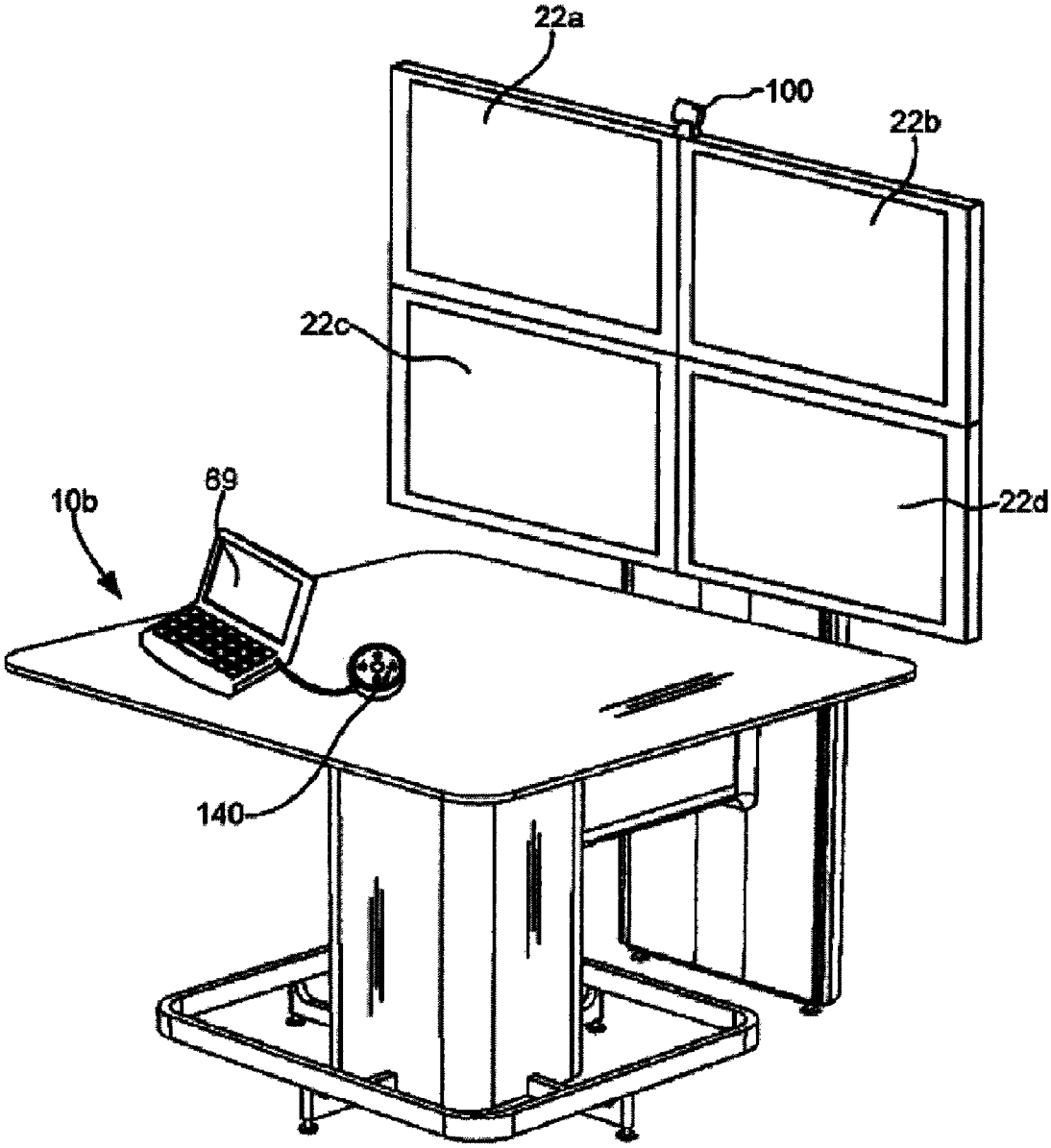

FIG. 19

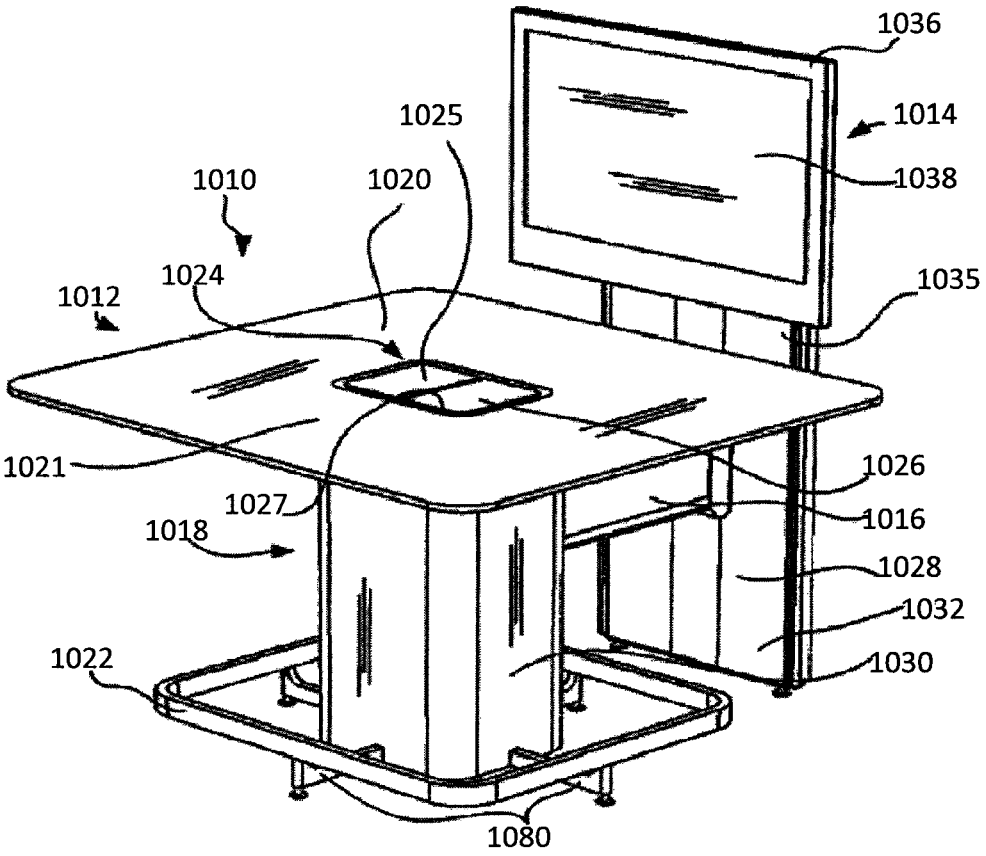
1036
1014
1025
1038
1010
1020
1024
1035
1012
1021
1026
1027
1016
1018
1028
1032
1022
1030
1080

FIG. 20

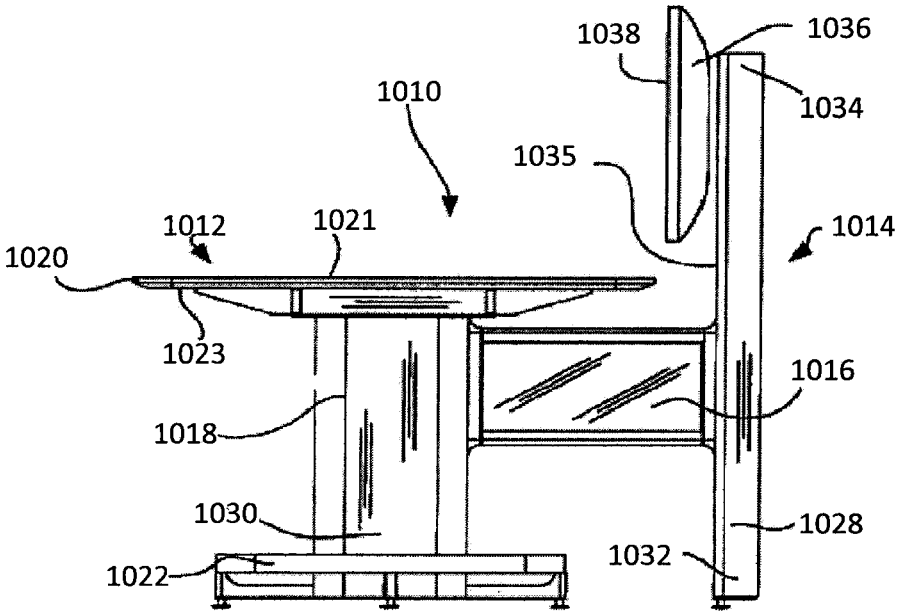
1038
1036
1034
1010
1035
1014
1012
1021
1020
1023
1016
1018
1030
1028
1032
1022

FIG. 21

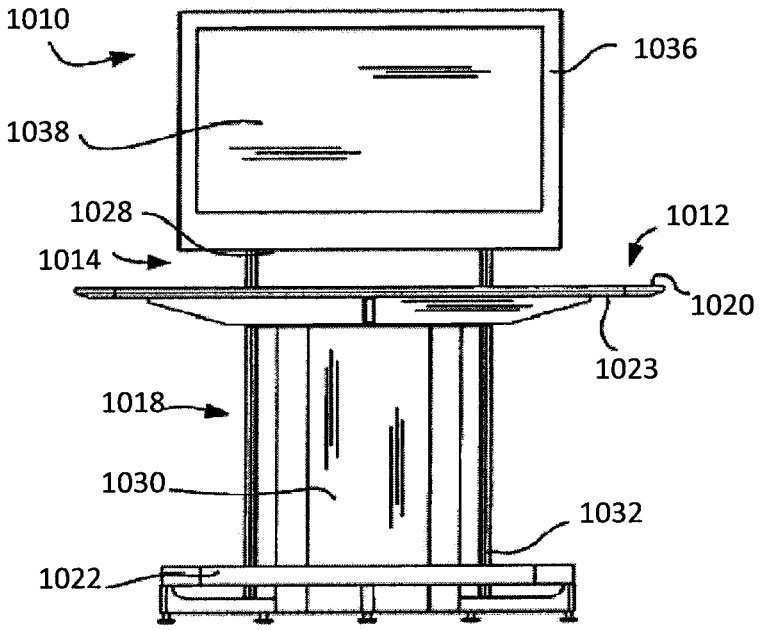

FIG. 22

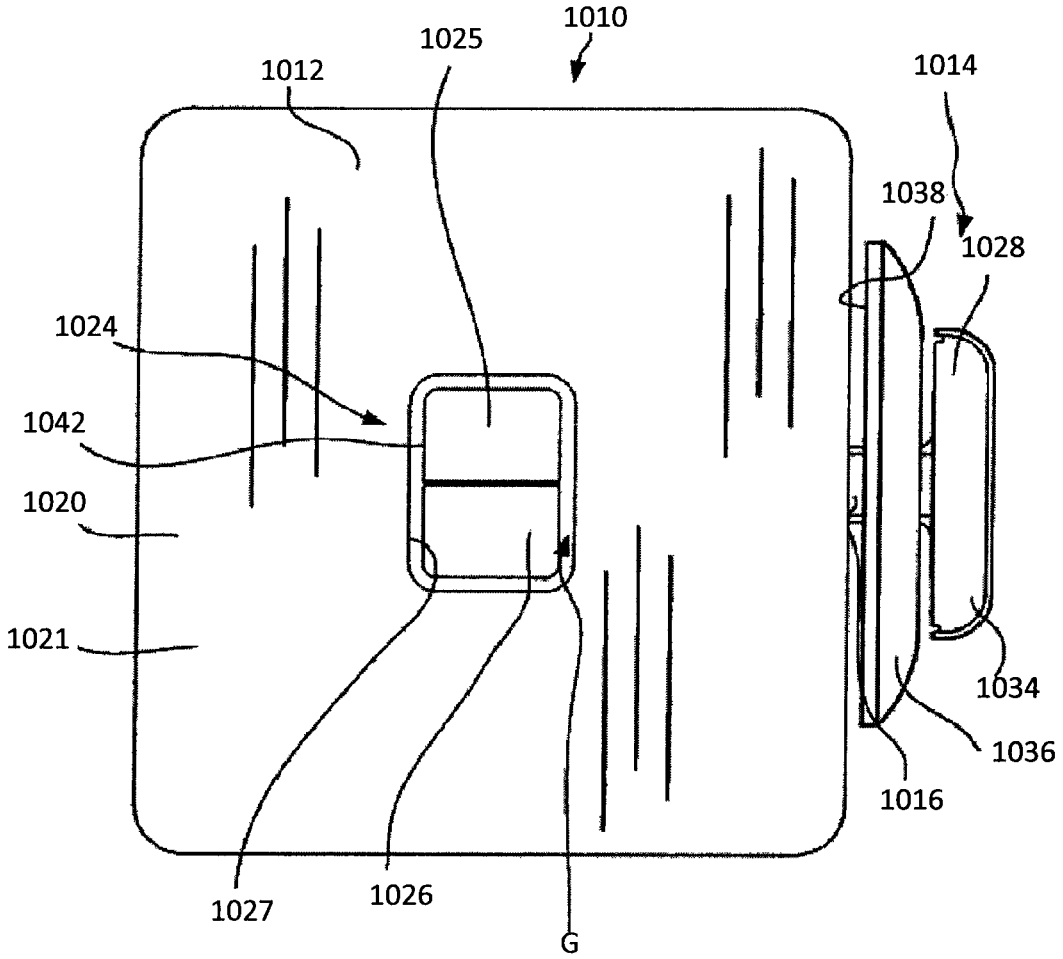
1010
1025
1012
1014
1038
1028
1024
1042
1020
1021
1034
1036
1016
1027
1026
G

FIG. 23

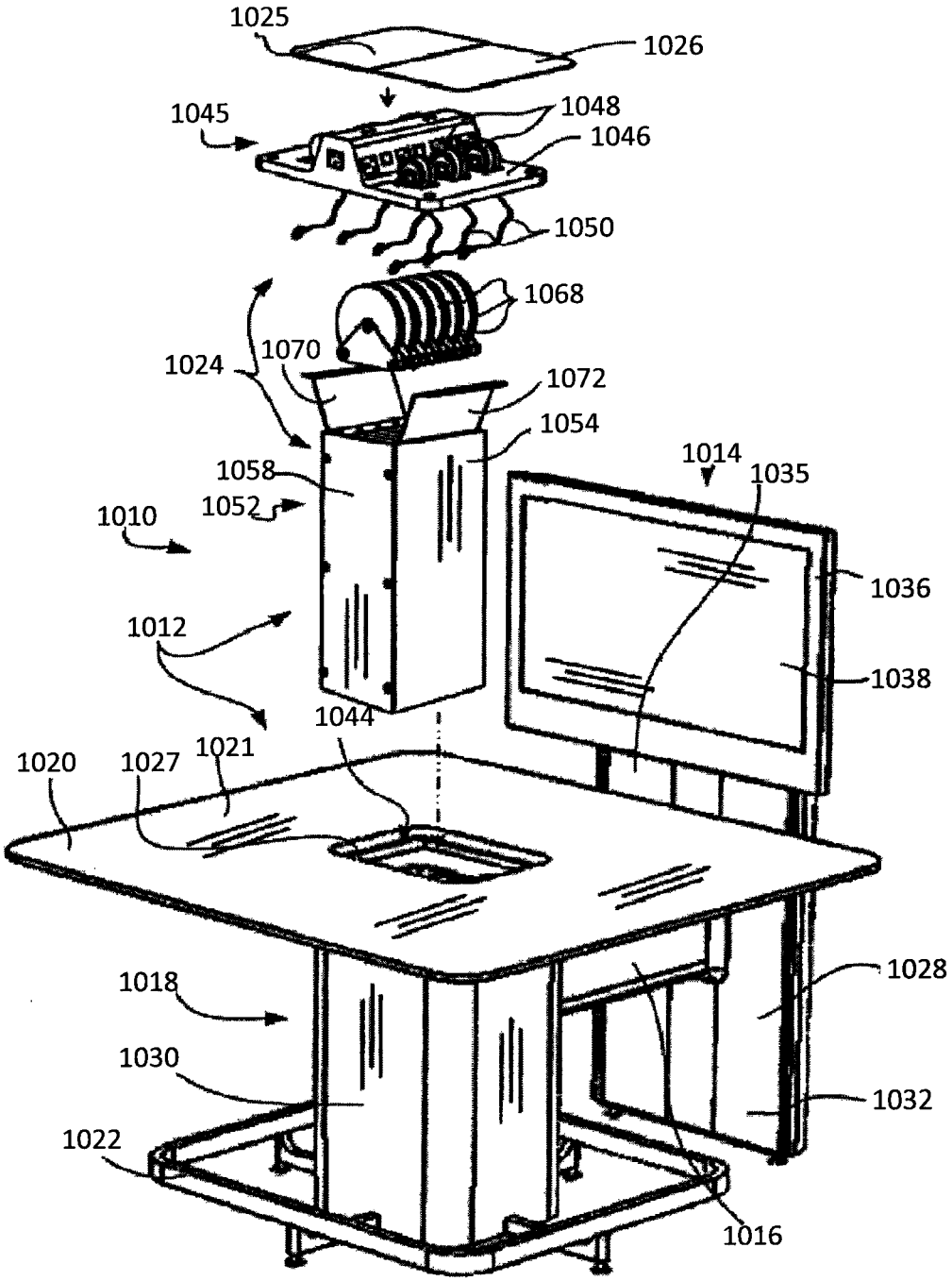
1025
1026
1045
1048
1046
1050
1068
1024
1070
1072
1054
1014
1035
1058
1052
1010
1036
1012
1038
1044
1020
1027
1021
1028
1018
1030
1032
1022
1016

FIG. 24

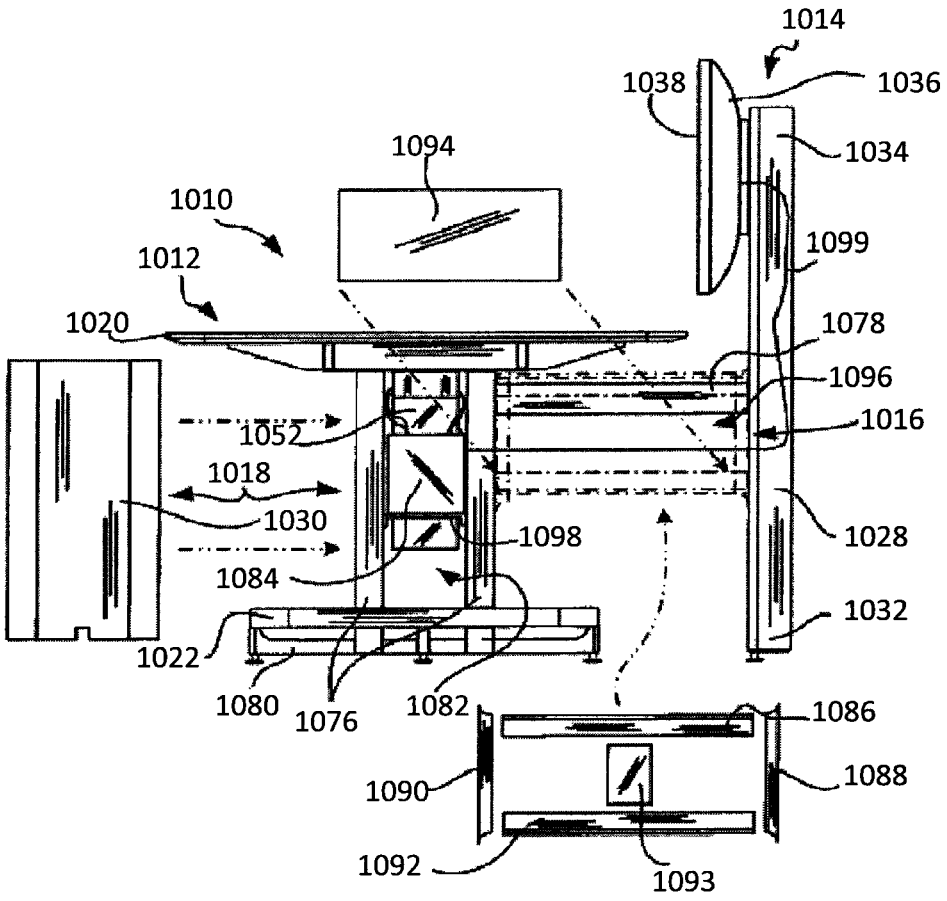
1014
1038
1036
1034
1094
1010
1099
1012
1020
1078
1096
1052
1016
1018
1030
1098
1028
1084
1032
1022
1080
1076
1082
1086
1090
1088
1092
1093

FIG. 25

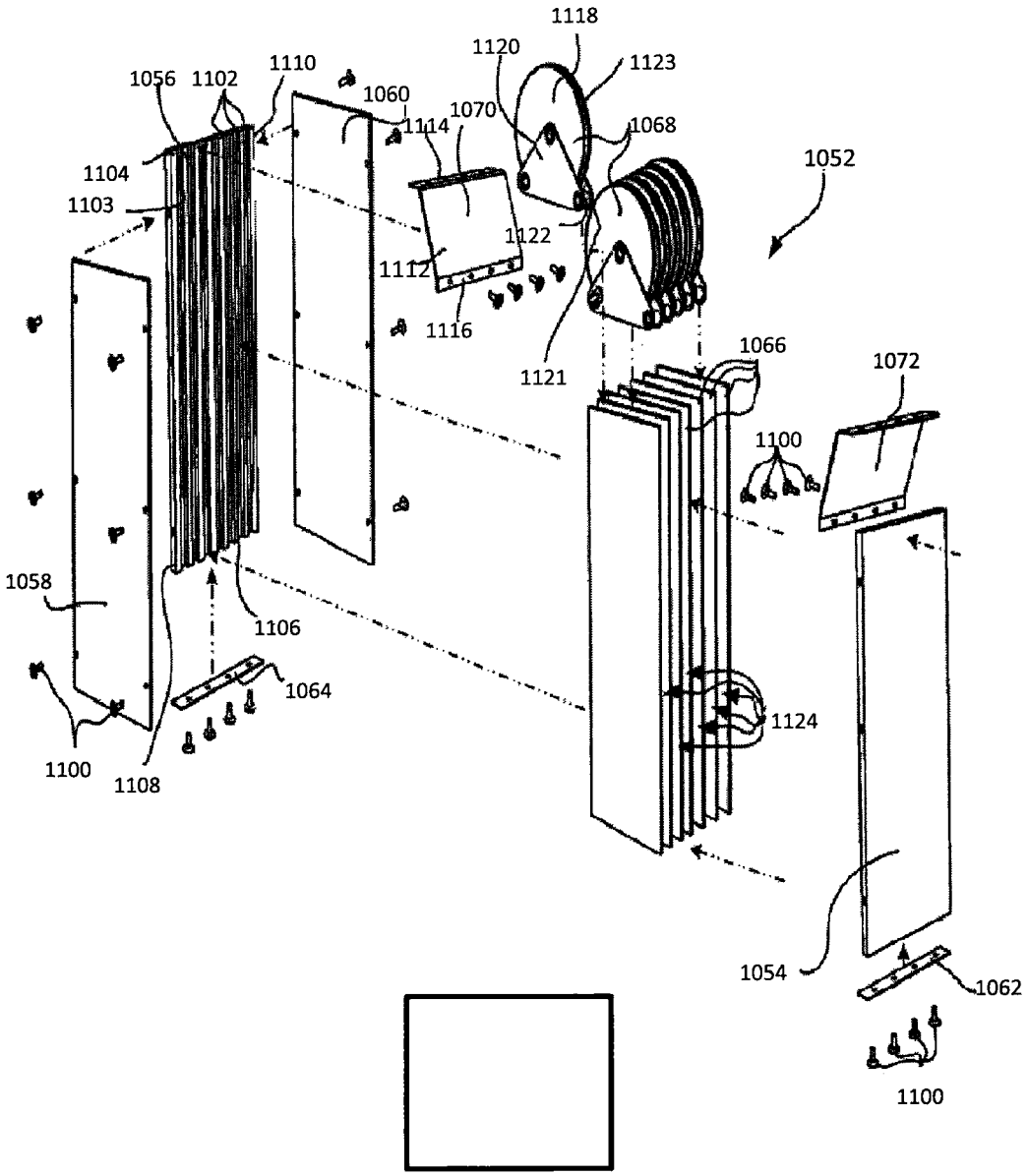
1118
1120
1123
1056
1102
1110
1060
1114
1070
1068
1052
1104
1103
1122
1112
1116
1121
1066
1072
1100
1058
1106
1064
1124
1100
1108
1054
1062
1100

FIG. 26

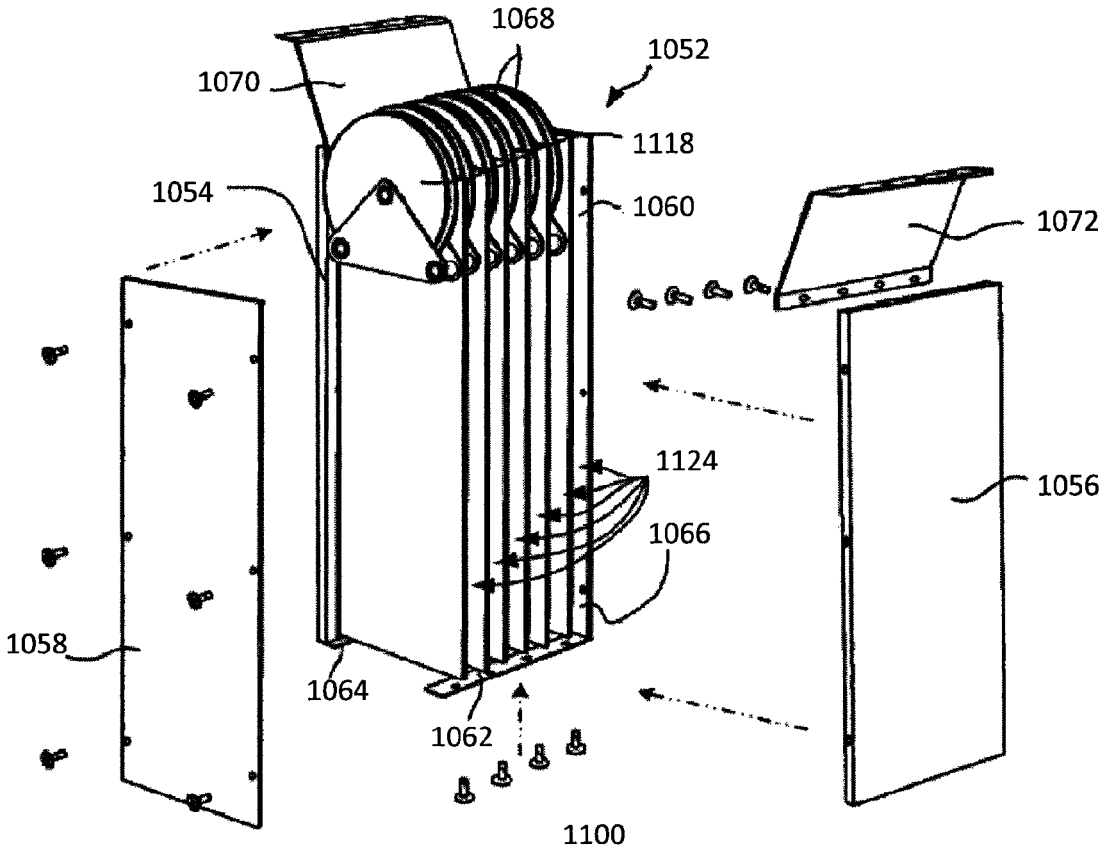
1068
1052
1070
1118
1054
1060
1072
1124
1056
1066
1058
1064
1062
1100

FIG. 27

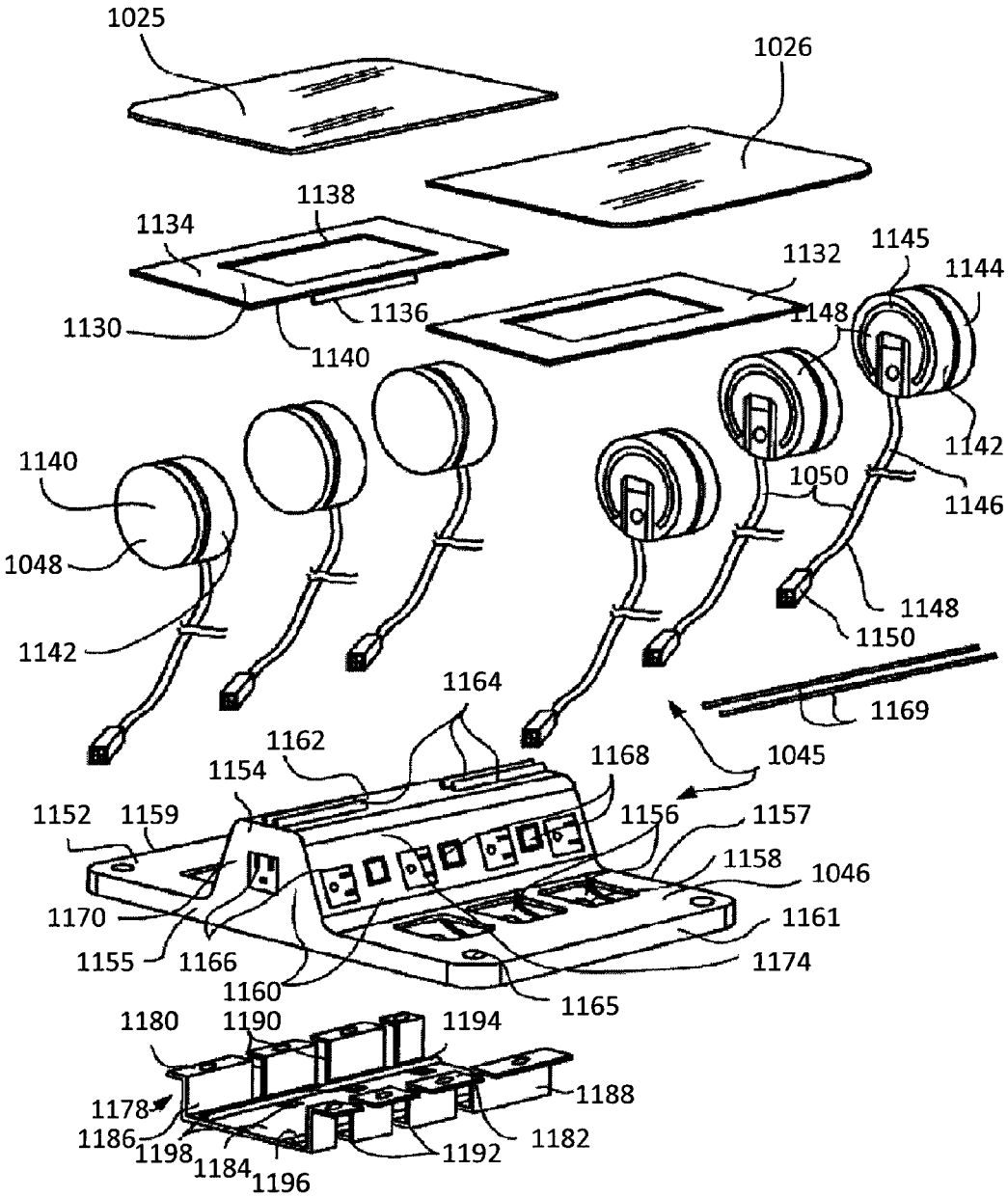
1025
1026
1138
1134
1132
1145
1144
1130
1136
1148
1140
1142
1140
1050
1146
1048
1148
1150
1142
1164
1169
1162
1168
1045
1154
1152
1159
1156
1157
1158
1046
1170
1161
1155
1166
1174
1160
1165
1180
1190
1194
1188
1178
1186
1198
1184
1196
1192
1182

FIG. 28

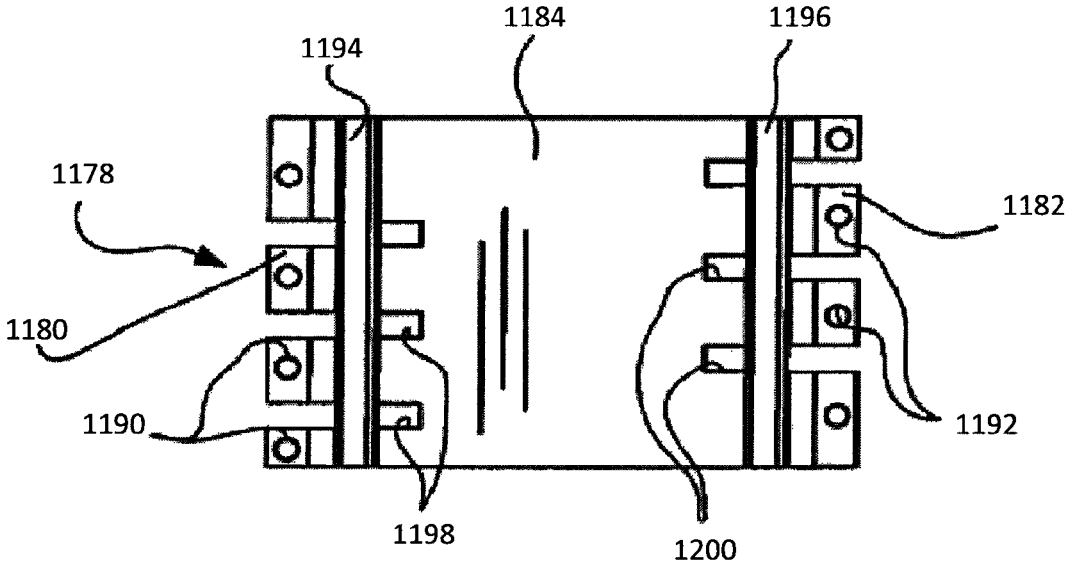

FIG. 29

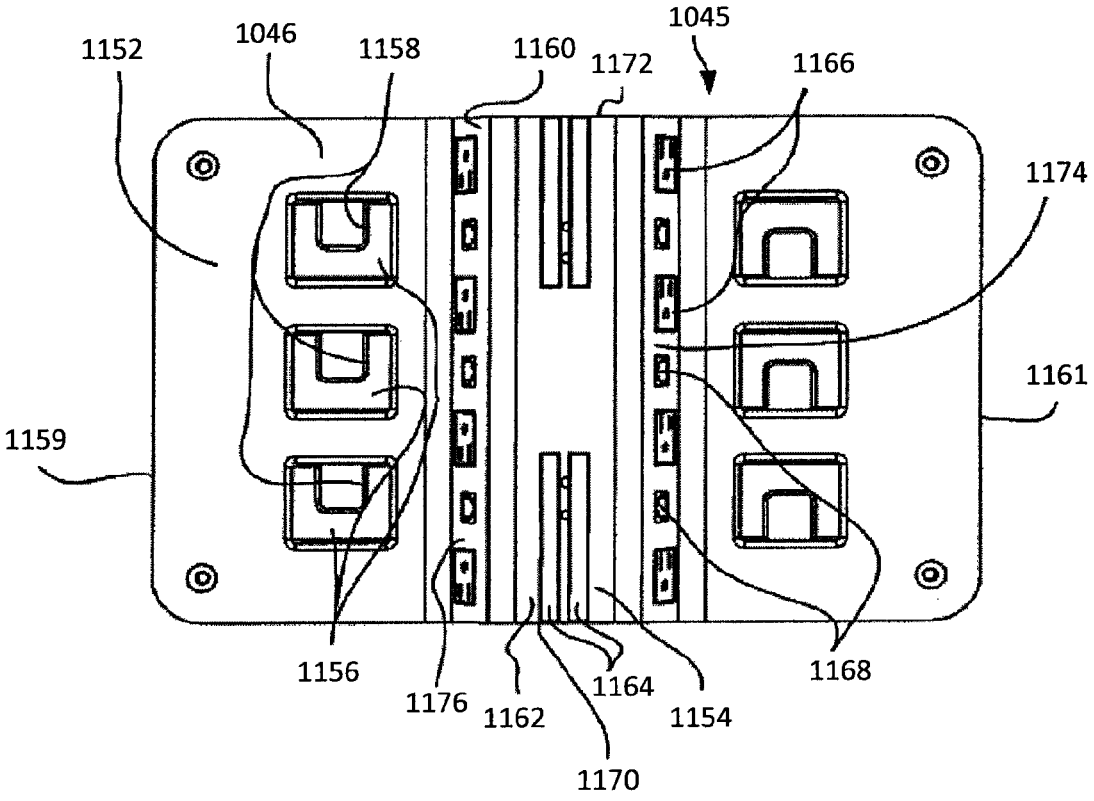
1045
1152
1046
1158
1160
1172
1166
1174
1161
1159
1156
1176
1162
1164
1154
1168
1170

FIG. 30

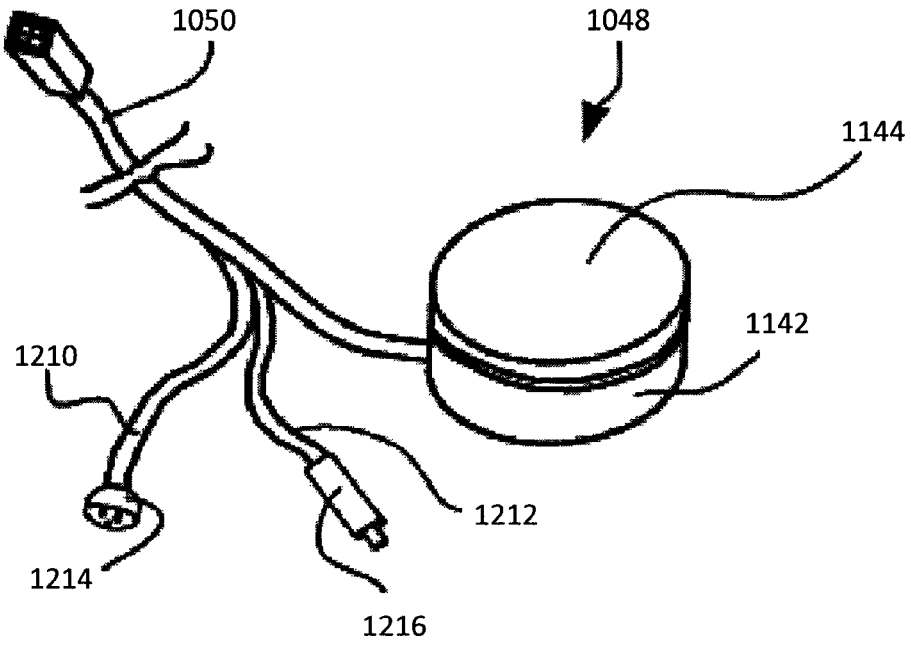

FIG. 31

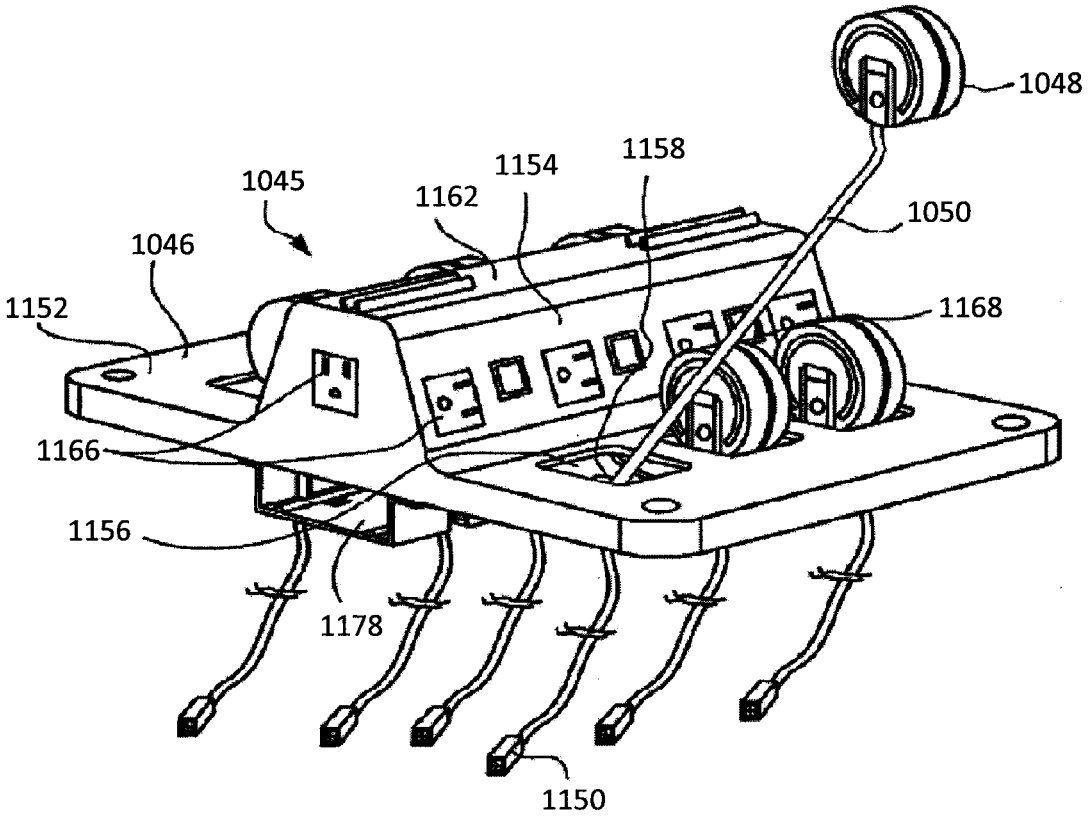
1048
1158
1154
1045
1162
1050
1046
1152
1168
1166
1156
1178
1150

FIG. 32

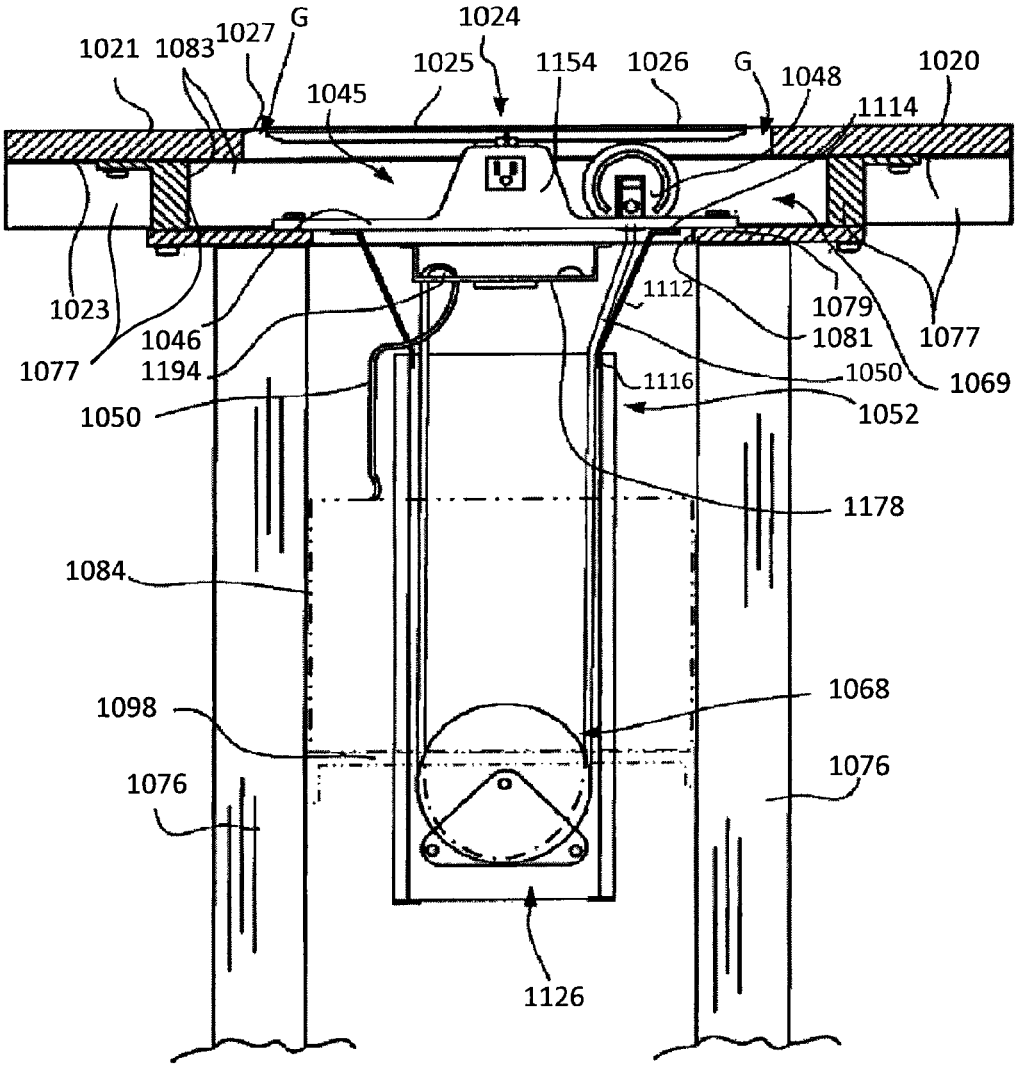
1021
1083
1027
G
1024
1025
1154
1026
G
1048
1020
1045
1114
1023
1046
1194
1077
1050
1112
1079
1081
1077
1069
1116
1050
1052
1178
1084
1068
1098
1076
1076
1126

FIG. 33

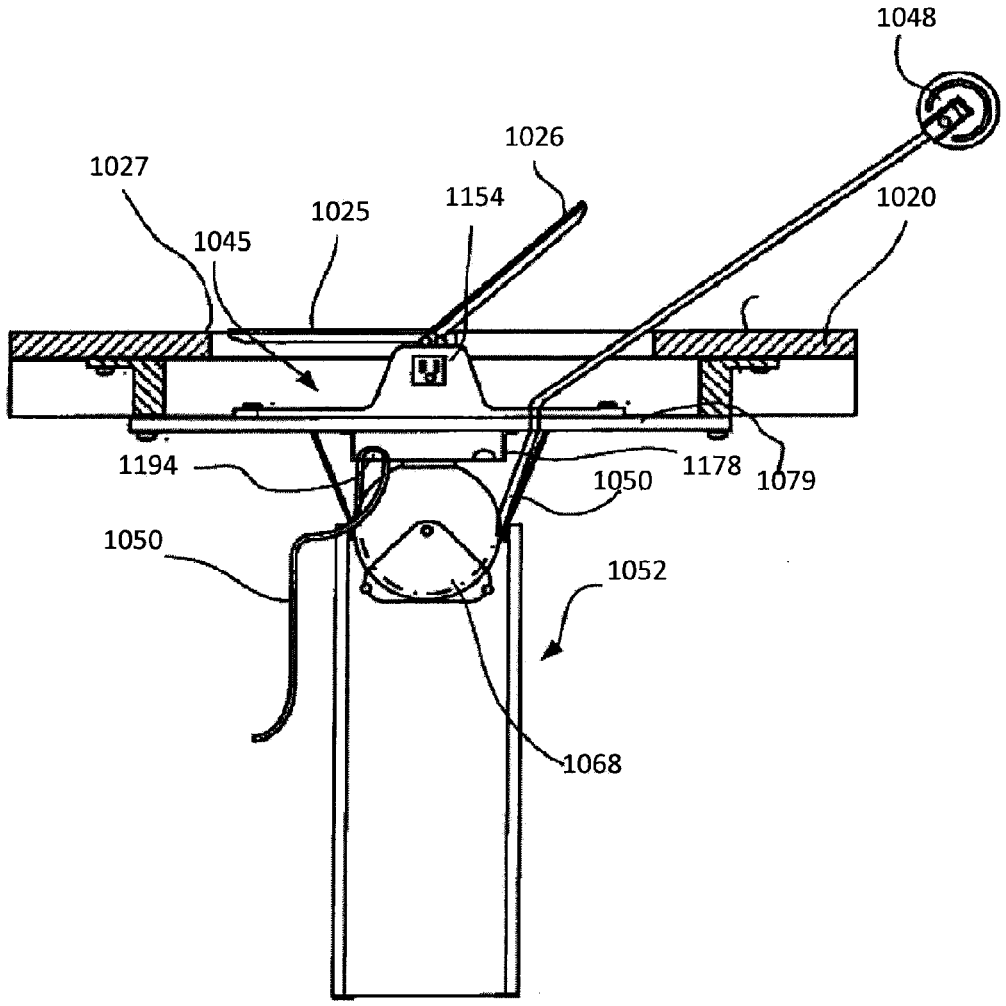
1048
1026
1027
1154
1025
1020
1045
1194
1178
1079
1050
1050
1052
1068

FIG. 34

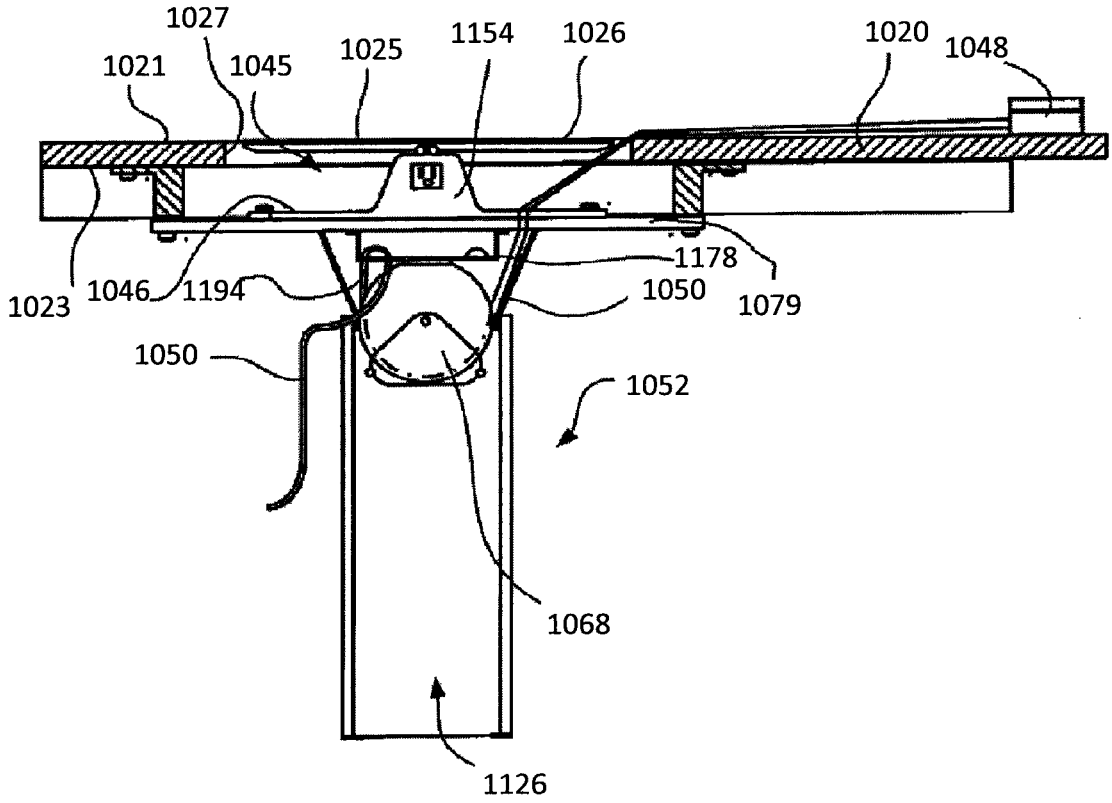
1027
1021
1045
1025
1154
1026
1020
1048
1023
1046
1194
1178
1050
1079
1050
1052
1068
1126

FIG. 35

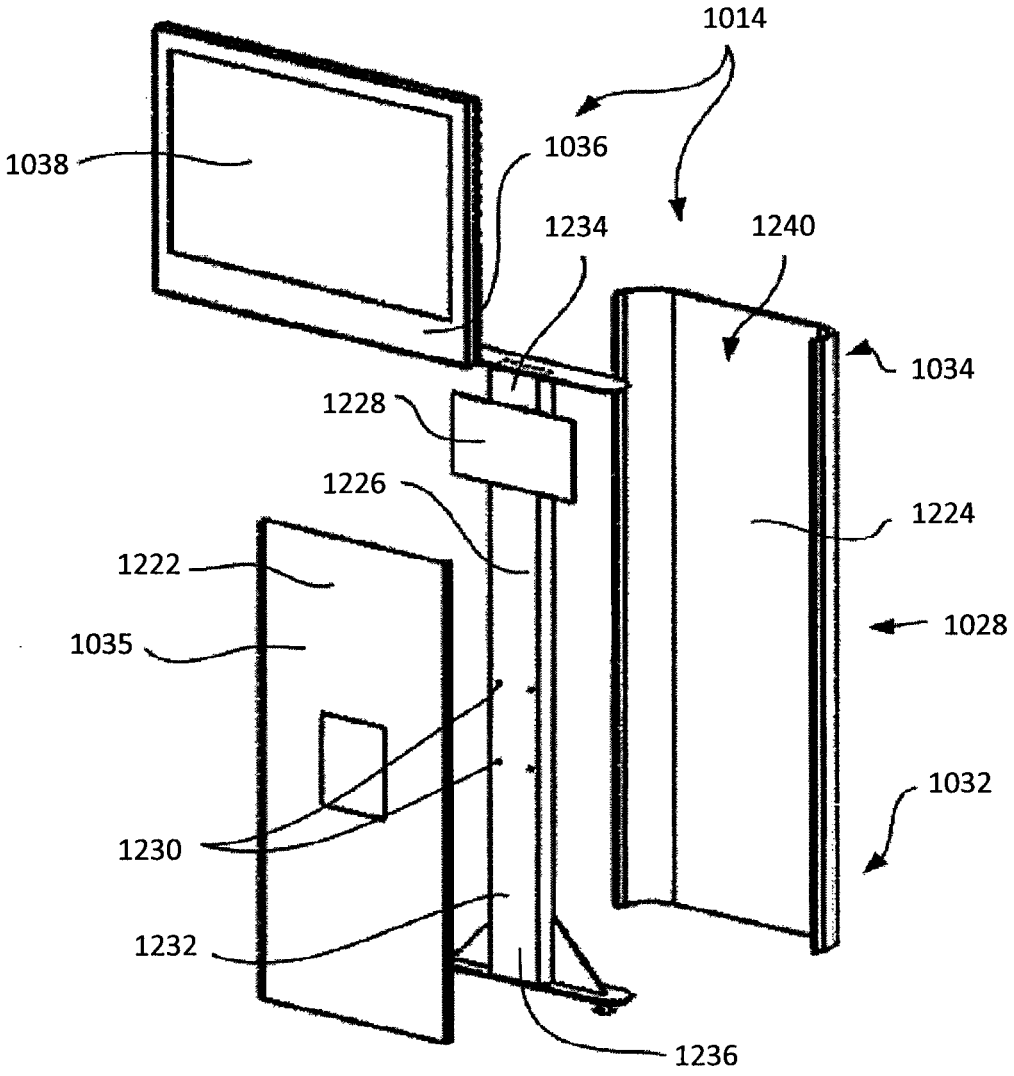
1014
1038
1036
1234
1240
1034
1228
1226
1224
1222
1028
1035
1032
1230
1232
1236

FIG. 36

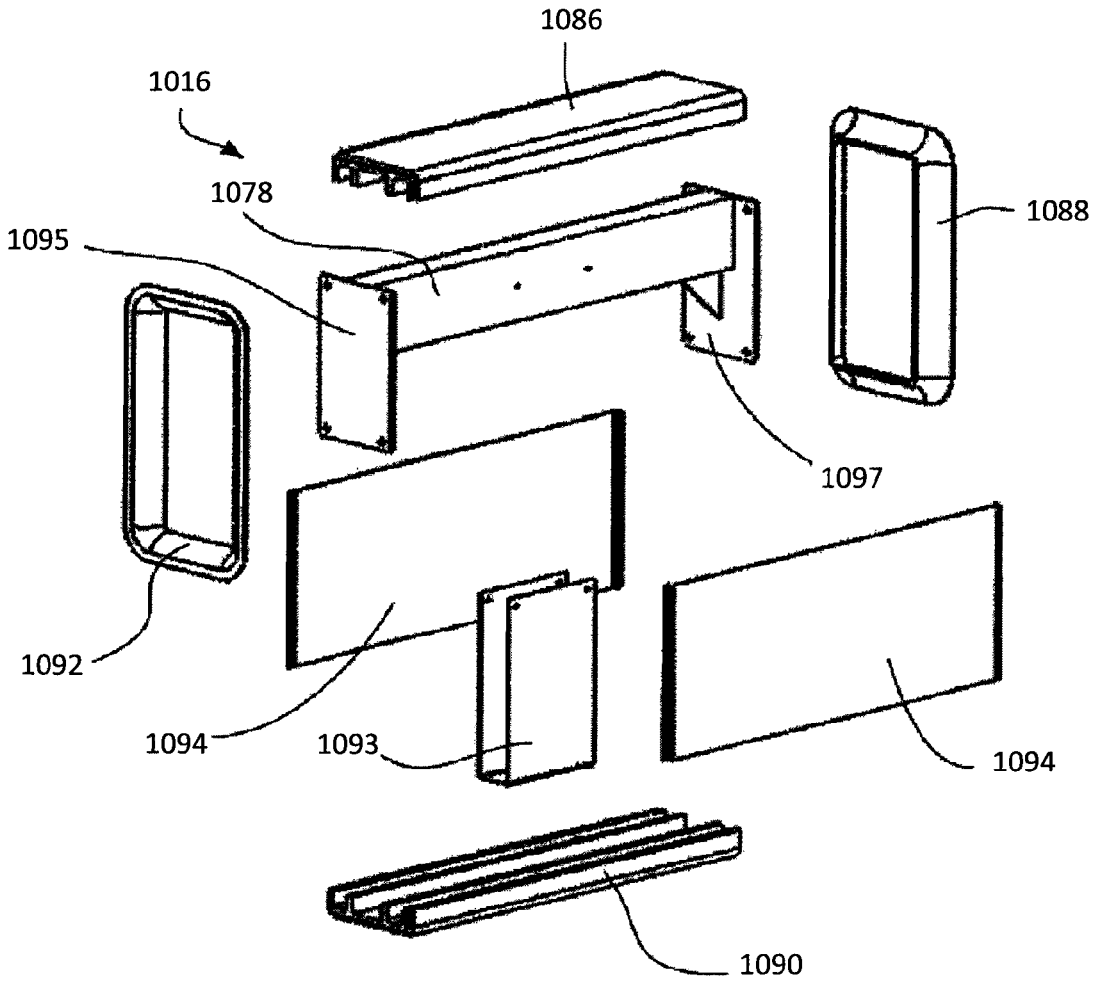

FIG. 37

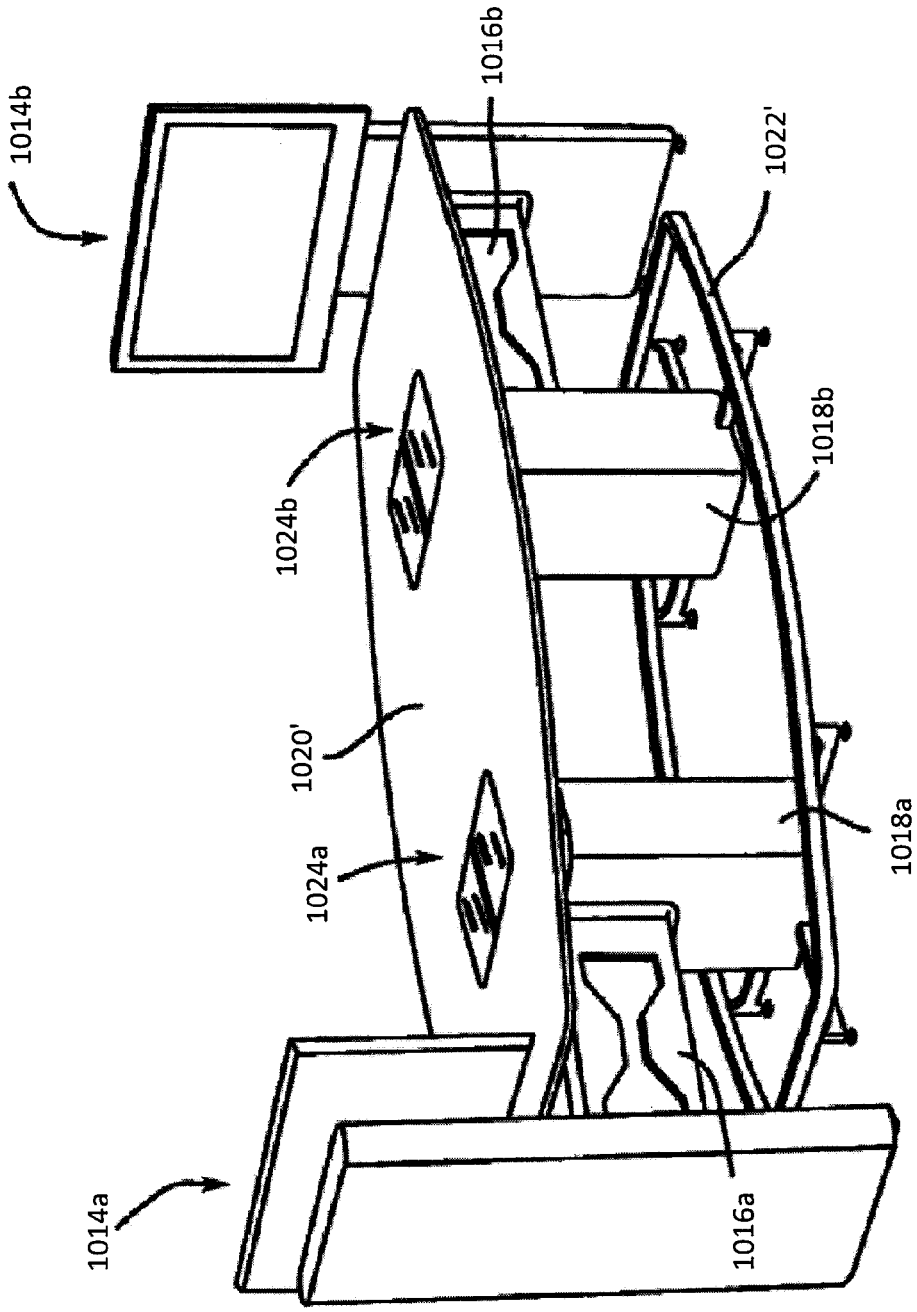

FIG. 38

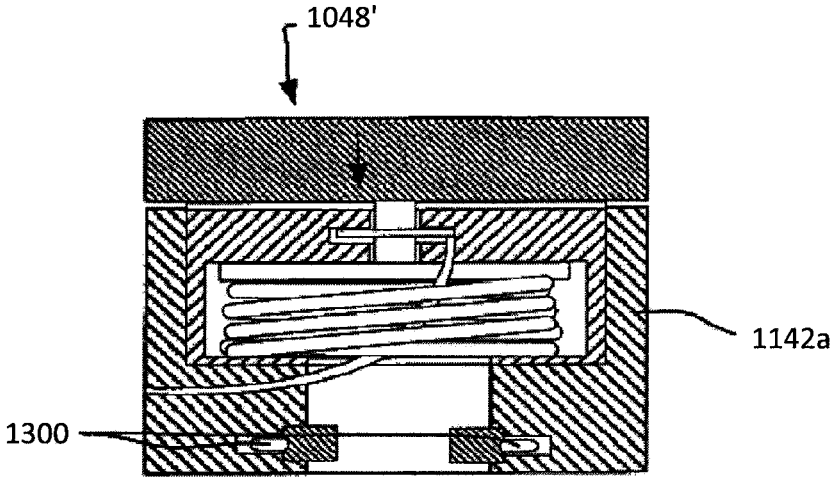

FIG. 39

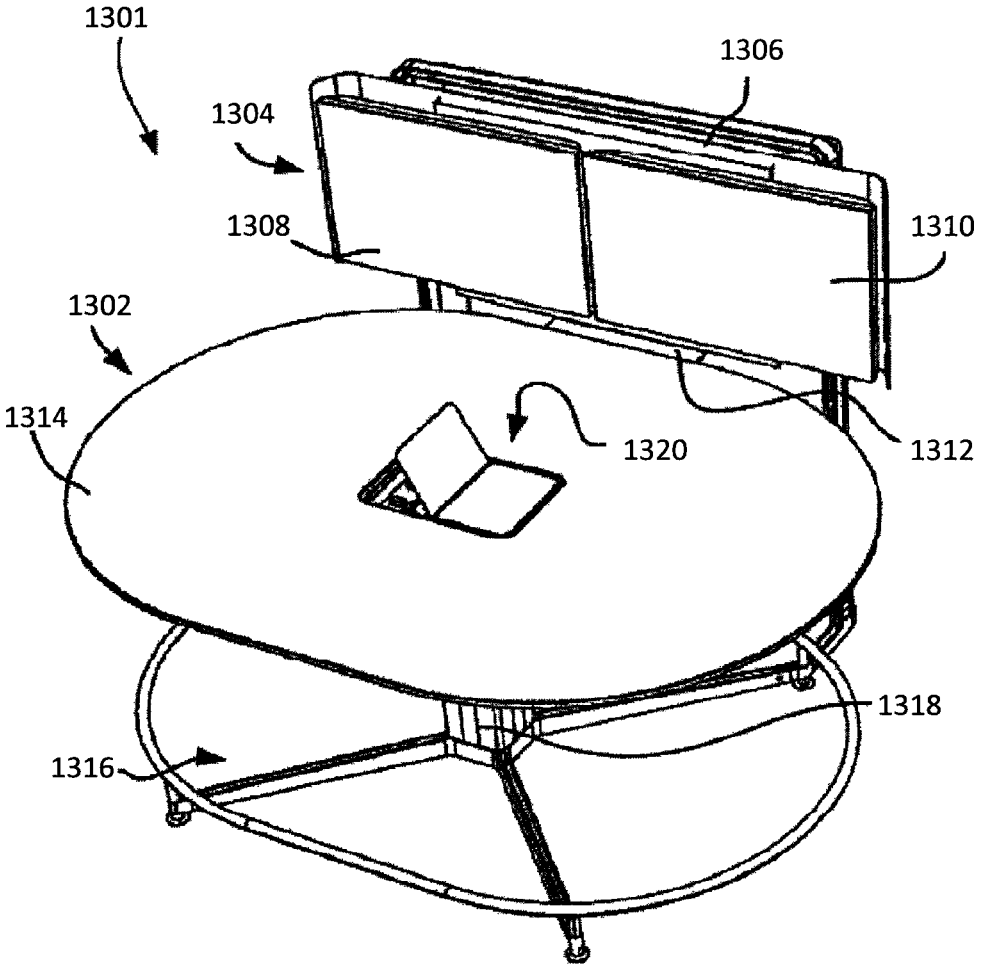

FIG. 40

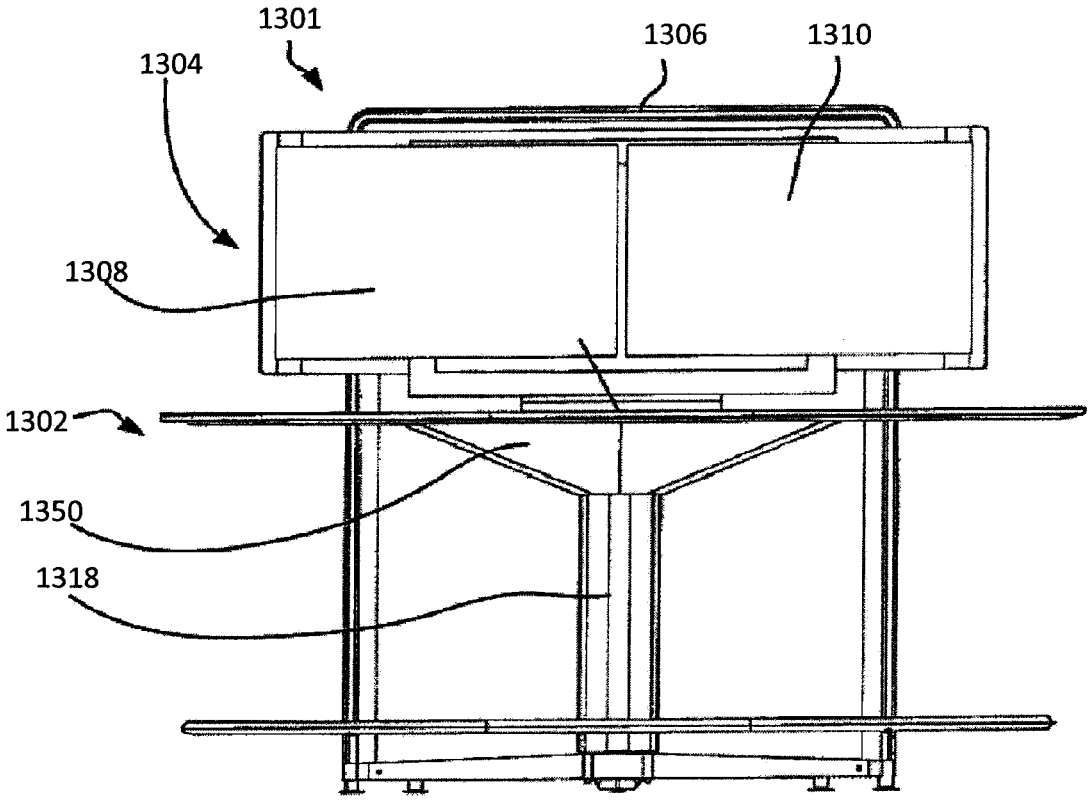

FIG. 41

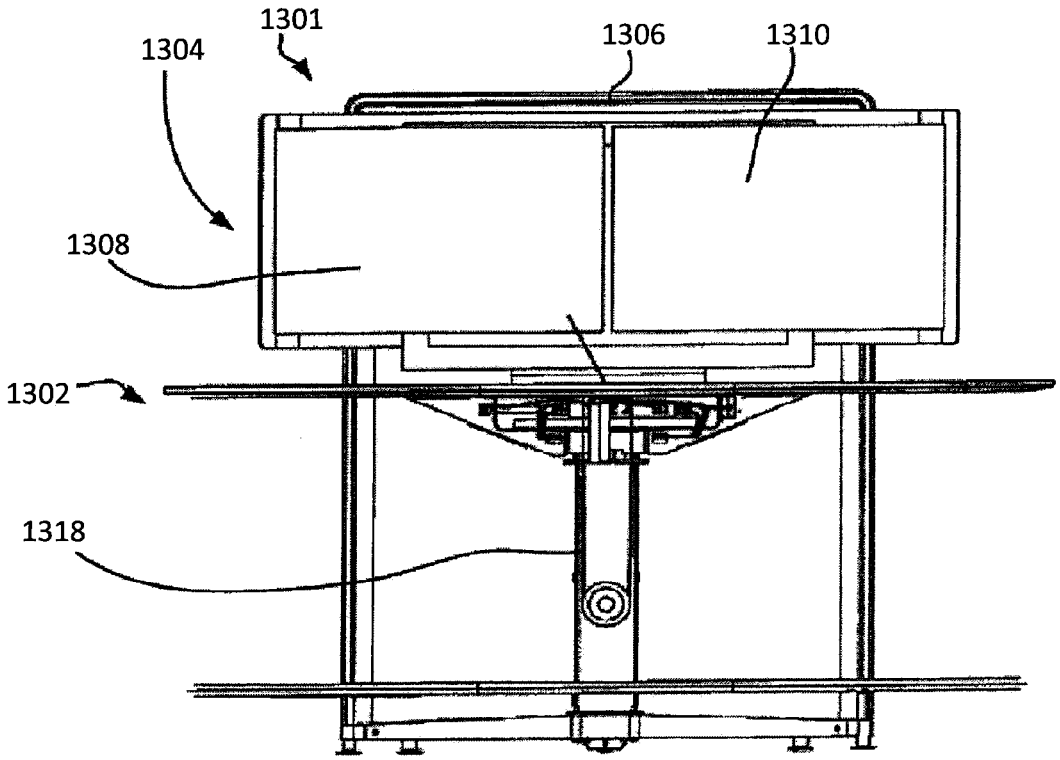

FIG. 42

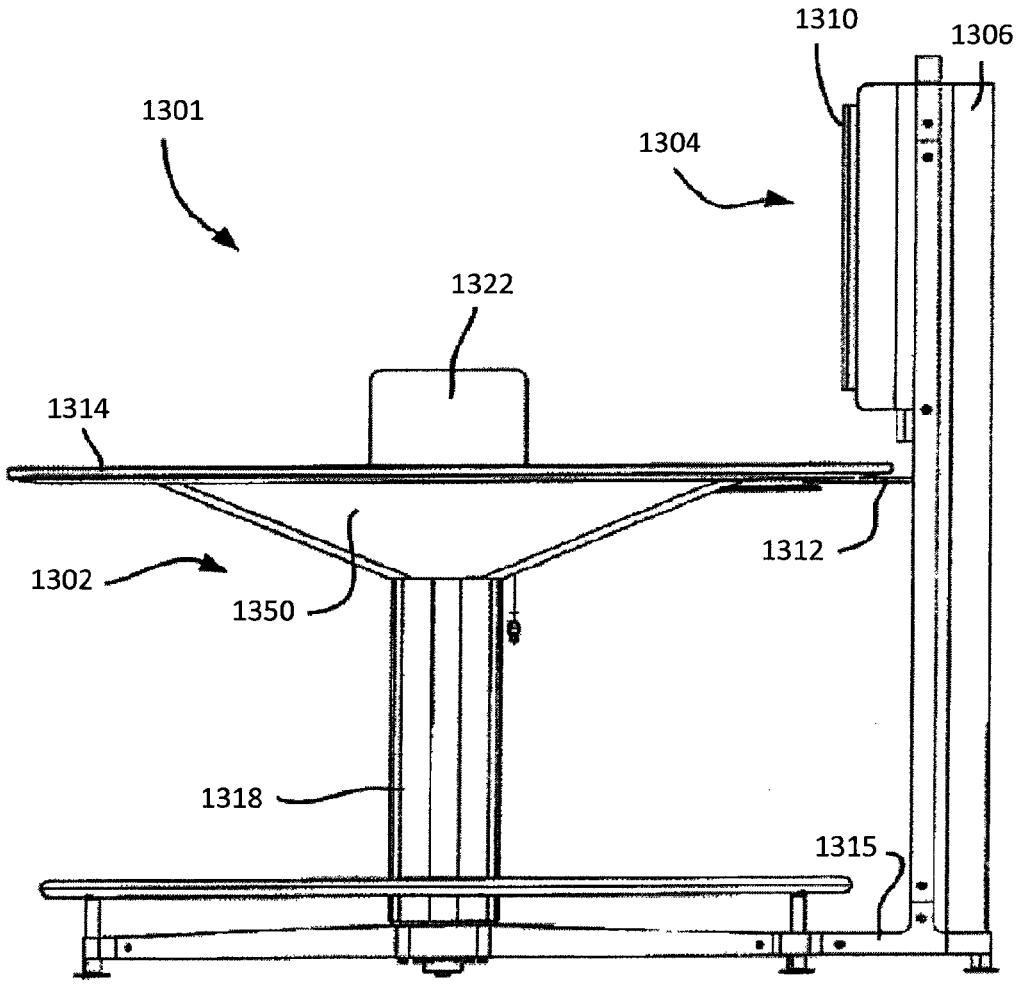

FIG. 43

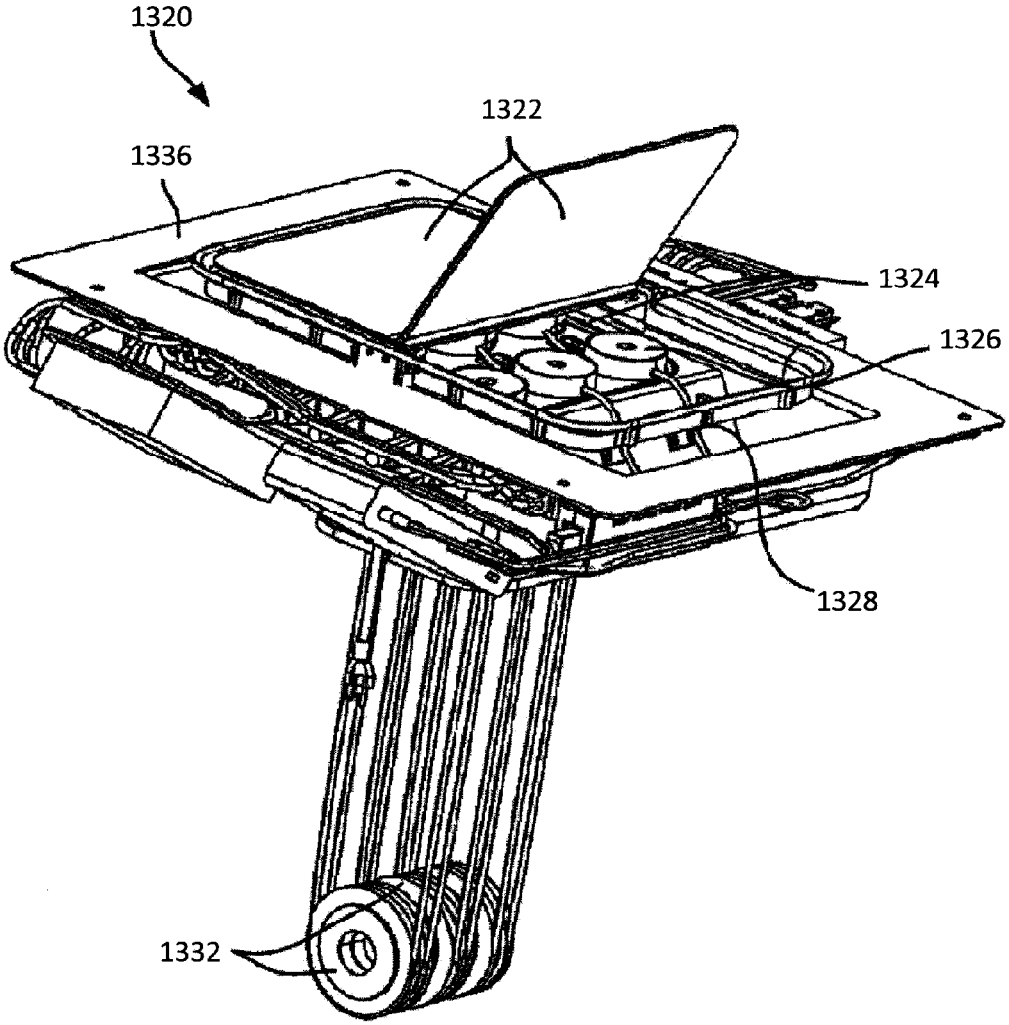

FIG. 44

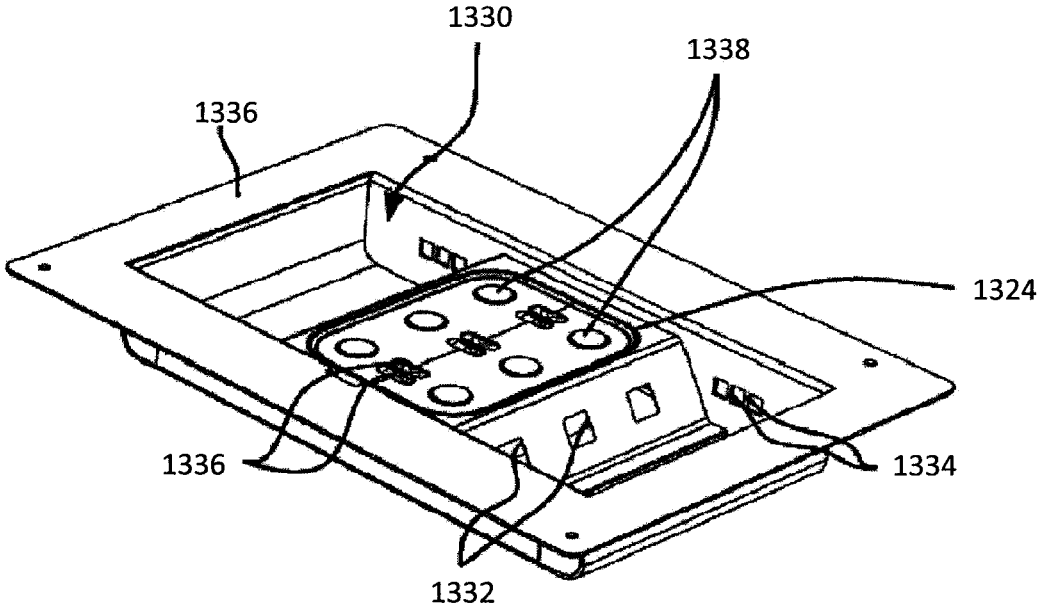

FIG. 45

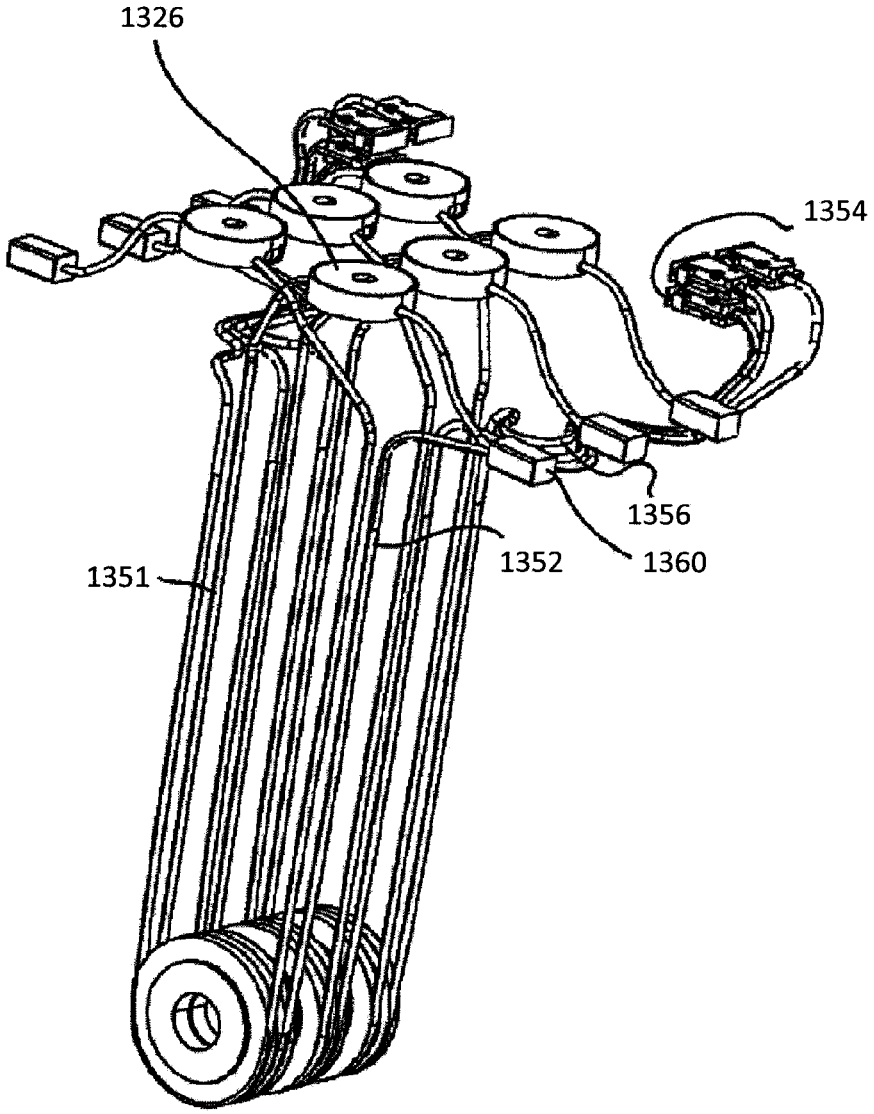

FIG. 46

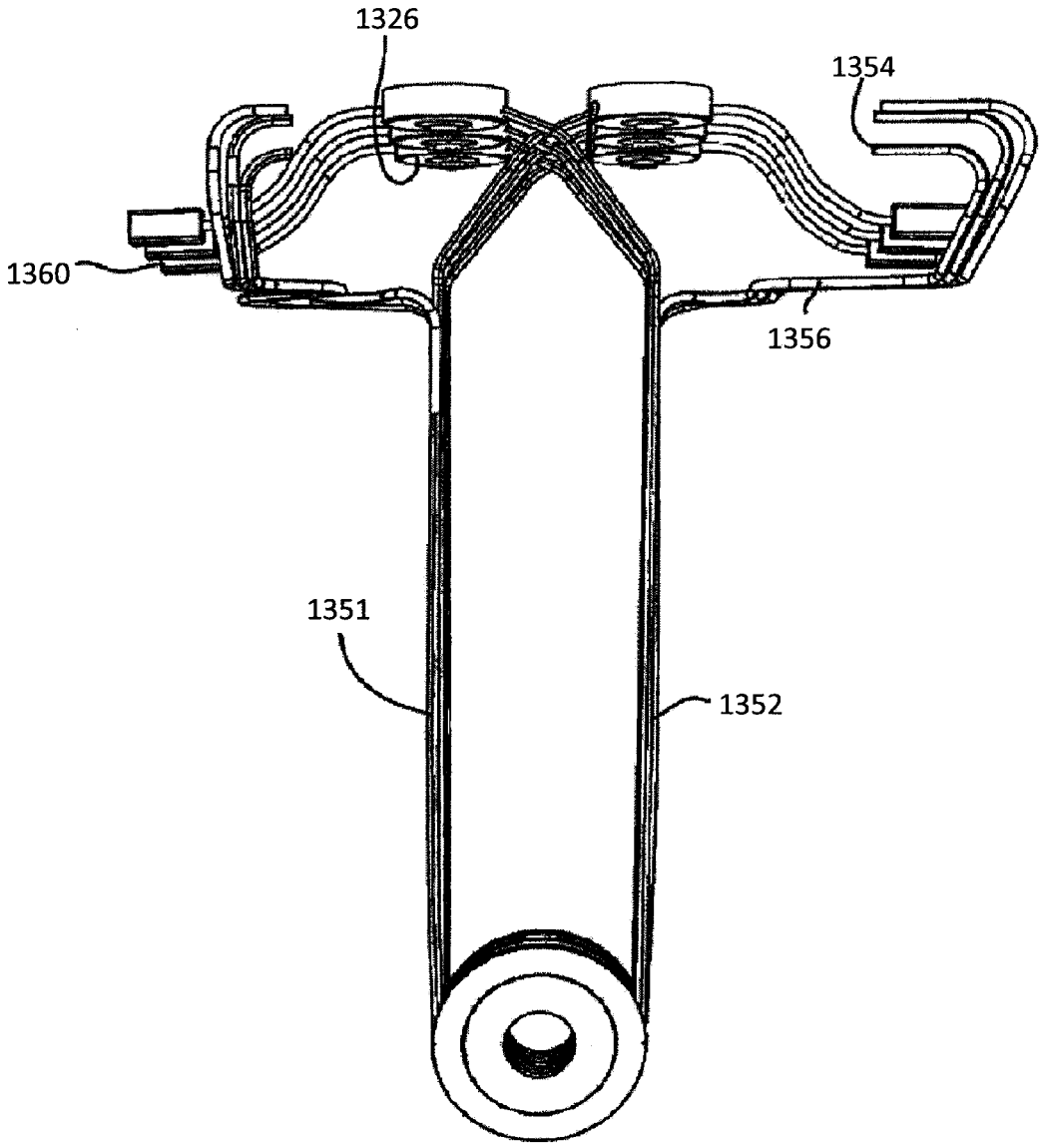

FIG. 47

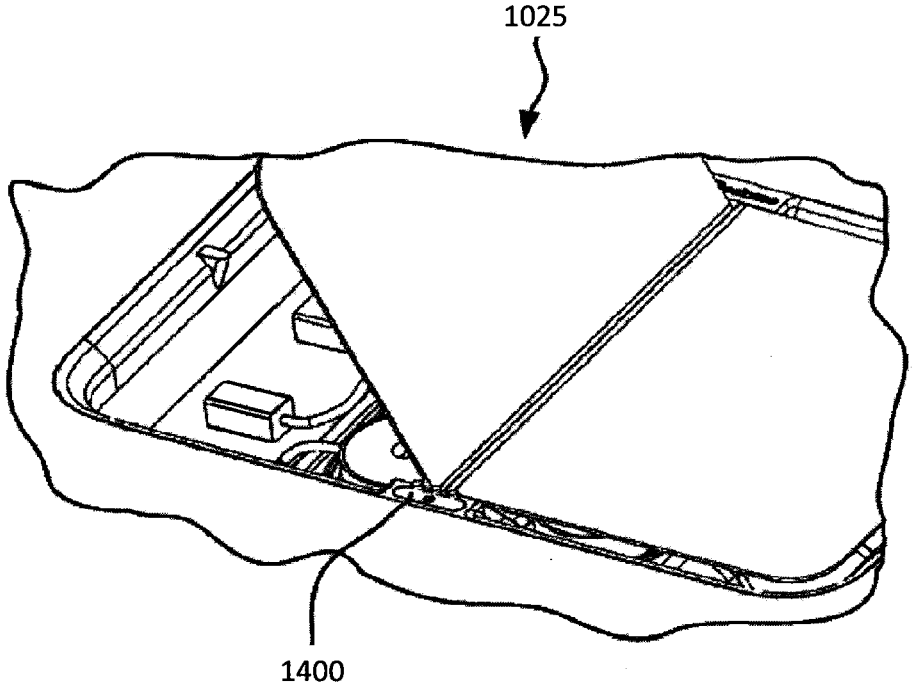

FIG. 48

PERSONAL CONTROL APPARATUS AND METHOD FOR SHARING INFORMATION IN A COLLABORATIVE WORKSPACE

CROSS-REFERENCE TO RELATED APPLICATIONS

This application is a continuation of U.S. application Ser. No. 12/474,670 which was filed on May 29, 2009 and which is titled "Control Apparatus And Method For Sharing Information In A Collaborative Workspace" which is a continuation of U.S. Pat. No. 8,074,581 that was filed on Oct. 13, 2008, that issued on Dec. 12, 2011 and which is titled "Conference Display Configuration" which claimed priority to U.S. provisional patent application No. 60/979,668 that was filed on Oct. 12, 2007.

STATEMENT REGARDING FEDERALLY SPONSORED RESEARCH OR DEVELOPMENT

Not applicable.

BACKGROUND OF THE INVENTION

The present invention relates to the presentation of audio-visual information via one or more large format common displays in a collaborative workspace and more specifically to a fast and intuitive controller allowing a meeting participant with a laptop computer to quickly and easily control the presentation of laptop information on common displays.

Small group conference tables usable as collaborative workspaces have been designed with one or more large video displays such as a LCD flat-panel monitor or a wall suitable for having images projected thereon, connected to or adjacent the conference table. The basic intent behind such workspace designs is to provide information at or near a table edge for attendees to refer to during discussions and presentations. In many cases, the video display is connected to and driven by a dedicated computer.

Oftentimes, more than one attendee needs to be able to control the information presented on the video display at different times during a conference. One way to allow several attendees to present information on a video display screen is to have each presenter sequentially connect their laptop computer directly to the display or projector with a dedicated audio/video cable. Though straightforward and simple, having to repeatedly disconnect and connect the cable from one laptop computer to another takes time and is disruptive.

Another way of enabling several attendees to share audio-visual information from their own laptop computers via a common large video display screen is to provide separate audio/video cables for each presenter and connect each of the laptops to an audiovisual switching device that enables the attendees to take control of the common display screen via selection of a button associated with each of the audio/video cables.

While such an arrangement provide a relatively quick transition between presenters, such arrangements typically require a separate controller or control program and a number of less-than-intuitive steps that must be followed to transition from one presenter to another. Further, known such arrangements do not provide a quick and intuitive indication as to which presenter is sharing their information via the video display screen. As a result, meeting presenters and participants may experience confusion and delay between transitions. Such user experiences may result in a

loss of productivity and in general, can be significant impediments to the successful collaboration between conference participants and willingness of participants to use the system.

Thus, while solutions for managing and controlling the flow of information from interconnected computing devices have been developed, known solutions do not provide simple and intuitive steps for selecting which information is shared via the video display and for indicating which of several video/audio resources currently control presented information.

BRIEF SUMMARY OF THE INVENTION

It has been recognized that a simple control interface may be provided where the interface provides feedback to configuration users indicating which of several different conference attendees is presenting information via one or more common display screens or presentation spaces. To this end, a separate control interface is provided for each of a plurality of attendees where each interface includes control buttons or the like and indicators that can indicate visually distinguished states. For instance, when a laptop or other video/audio source is linked to one of the control interfaces, the interface may visually indicate that the laptop is in a state wherein the laptop may be used to present information via one or more common displays but that the laptop is not currently presenting. When a user selects one of the buttons on the interface to present information on the common display, the indicator may change appearance to visually indicate to attendees that the laptop linked to the interface is presenting.

It has also been recognized that where a configuration includes more than one common display, it would be useful to provide an indication to each configuration user as to common display options which can be selected and which common displays are currently being driven via a user's laptop or other source. To this end, in at least some cases each control interface is configured to include a separate selectable buttons for each common display where, when a button is selected so that a source associated with the interface is to drive an associated display, the appearance of the button or an indicator associated therewith is modified to indicate to the user which of the common displays is currently being driven. In particularly advantageous embodiments the indicators include illumination devices wherein different illumination colors indicate different states or conditions.

Consistent with the above, at least some inventive embodiments include a method of selecting information from a video source to be displayed on at least a first common display screen in a collaborative workspace having a switching device, the method comprising the steps of providing a selectable control interface that includes at least one indicator that can indicate at least first and second different states, associating a video source with the switching device so that video information from the video source is presented to the switching device, when the video source is associated with the switching device, causing the at least one indicator to indicate a first state and, when the selectable control interface is selected, causing the at least one indicator to indicate the second state and providing the video information from the video source to the common display screen via the switching device.

In at least some cases the step of providing a selectable control interface includes providing a mechanical interface that includes at least one selectable button. In at least some

cases the mechanical interface includes a first cable linkable to the video source and a second cable which links to the switching device and wherein the step of associating a video source with the switching device includes linking the first cable to the video source. In at least some cases the indicator includes at least a first illumination device wherein the steps of causing the at least one indicator to indicate the first and second states includes causing the illumination device to light up first and second different colors, respectively.

In at least some cases the control interface forms a substantially flat upper surface and wherein the at least a first illumination device transmits light around a periphery of the flat upper surface. In at least some embodiments the method further includes the step of, while the video information from the video source is provided to the shared display screen via the switching device, when the selectable control interface is selected a second time, causing the at least one indicator to indicate the first state and blocking the video information from the video source to the shared display screen via the switching device.

In at least some cases the method is for use with a system that includes a plurality of common display screens wherein the selectable control interface includes a separate selectable control for each of the plurality of display screens and wherein the at least one indicator includes a separate illumination device for each of the separate selectable controls, the step of causing the at least one indicator to indicate the first state including causing each illumination device associated with a common display screen to generate light of a first color indicating the first state and wherein, when any one of the control interfaces is selected, the method further includes the steps of causing the illumination device associated with the selected control to indicate the second state and providing the video information from the video source to the common display screen associated with the selected control.

In at least some embodiments the method further includes the steps of providing a second selectable control interface that includes at least one indicator that can indicate at least first and second different states, associating a second video source with the switching device so that video information from the second video source is presented to the switching device, when the second video source is associated with the switching device, causing the at least one indicator on the second control interface to indicate the first state and when the second selectable control interface is selected, causing the at least one indicator on the second control interface to indicate the second state and providing the video information from the second video source to the common display screen via the switching device irrespective of which source was providing video information to the common display screen prior to selection of the second selectable control interface device.

In some embodiments the video source is a computer including a display screen and wherein the control interface appears on the computer display screen for selection. In some embodiments communication between the computer and the switching device is wireless.

Other embodiments include a method of selecting information from a video source to be displayed on a subset of M common display screens in a collaborative workspace having a switching device, the method comprising the steps of providing a control interface that includes N selectable controls wherein N is at least as great as M and wherein each control is associated with a separate indicator and each indicator may assume at least first and second visually distinguishable states, associating a video source with the switching device so that video information from the video source is presented to the switching device and when the video source is associated with the switching device, causing a separate indicator for each of the M common display screens to assume the second visual state while the other N−M indicators remain in the first visual state.

In some embodiments each control includes a separate illumination device which may be illuminated to indicate at least one of the first and second states. In some embodiments each control indicates the second state by exciting an associated illumination device and indicates the first state by cutting off power to the illumination device. In some embodiments each of the indicators may assume a third visually distinguishable state, the method further including the steps of, when any of the selectable controls is selected, causing the indicator associated with the selected control to indicate the third state and providing the video information from the video source to the common display screen via the switching device.

In some embodiments the control interface is provided via a representation on a computer display screen. In some embodiments the step of providing a control interface includes providing a mechanical interface that includes a cable and wherein the step of associating a video source with the switching device includes linking the video source to the mechanical interface via a cable.

Still other embodiments include an apparatus for selecting information from a video source to be displayed on at least a first common display screen in a collaborative workspace having a switching device, the apparatus comprising a control interface that includes at least a first indicator that can visually indicate at least first, second and third visually distinguished states wherein the control interface indicates the first state when a video source is disassociated with the switching device, the second state when the video source is associated with the switching device and video information from the video source is not presented via the common display and the third state when the video source is associated with the switching device and video information from the video source is presented via the common display.

In some embodiments the at least a first indicator includes an illumination device and wherein the first state is indicated by cutting power to the illumination device, the second state is indicated via illumination of a first color and the second state is indicated via illumination of a second color. In some embodiments the control interface includes at least a first selectable control which, when selected, causes the video information from the video source to be presented via the common display and causes the indicator to change from the first state to the second state.

Other embodiments include an apparatus for selecting information from a video source to be displayed on a subset of M common display screens in a collaborative workspace having a switching device, the apparatus comprising a control interface that includes N selectable controls wherein N is at least as great as M and wherein each control is associated with a separate indicator and each indicator may assume at least first and second visually distinguishable states, wherein, when a video source is not associated with the switching device, each indicator indicates the first state and, when a video source is associated with the switching device, a separate indicator for each of the M common display screens assumes the second state while the other N−M indicators remain in the first state.

To the accomplishment of the foregoing and related ends, the invention, then, comprises the features hereinafter fully described. The following description and the annexed draw-

ings set forth in detail certain illustrative aspects of the invention. However, these aspects are indicative of but a few of the various ways in which the principles of the invention can be employed. Other aspects, advantages and novel features of the invention will become apparent from the following detailed description of the invention when considered in conjunction with the drawings.

BRIEF DESCRIPTION OF THE SEVERAL VIEWS OF THE DRAWINGS

FIG. **1** is a perspective view of a collaborative conference table configuration having four display screens in accordance with at least some aspects of the present invention;

FIG. **2** is a view of a portion of the configuration shown in FIG. **1**, albeit where a switcher and other components and cables that are typically hidden under the top surface of FIG. **1** are shown in perspective views;

FIG. **3** includes a top plan view, end views and a side view of the switcher shown in FIG. **2**;

FIG. **4** is an enlarged perspective view showing one of the puck control assemblies that comprises a portion of the configurations shown in FIG. **1**;

FIG. **5** is a schematic illustrating components of an exemplary control interface/puck;

FIG. **6** is a schematic illustrating the puck control assembly of FIG. **4** and a power on button in the first state after the power on button has been selected to cause the system to begin operation;

FIG. **7** is a schematic illustrating an exemplary screen shot corresponding to a portion of an instructional video that may be presented via one or more of the displays shown in FIG. **1** after the power on button is selected;

FIG. **8** is similar to FIG. **7**, albeit illustrating a different portion of the instructional video;

FIG. **9** is similar to FIG. **7**, albeit illustrating yet a different portion of the instructional video;

FIG. **10** is similar to FIG. **6**, albeit illustrating the state of the puck when a laptop is initially connected thereto;

FIG. **11** is similar to FIG. **10**, albeit illustrating the state of the puck after a selection button corresponding to one of the display screens of FIG. **1** has been selected;

FIG. **12** is similar to FIG. **11**, albeit illustrating the puck condition after three buttons corresponding to three of the display screens shown in FIG. **1** have been selected;

FIG. **13** is similar to FIG. **1**, albeit illustrating another configuration embodiment as consistent with at least some aspects of the present invention;

FIG. **14** is similar to FIG. **10**, albeit illustrating the puck condition for the system of FIG. **12** where the system only includes two displays;

FIG. **15** is similar to FIG. **1**, albeit illustrating a system that includes a wireless access device so that laptops and other video/audio sources can link provide data to the displays wirelessly;

FIG. **16** shows a puck "widget" that may be presented via a laptop display screen;

FIG. **17** shows a puck "widget" provided on a touch sensitive palm type computing device;

FIG. **18** is similar to FIG. **16**, albeit showing a different appearing virtual control interface; and

FIG. **19** is similar to FIG. **15**, albeit where a mechanical interface is included for use with a source.

FIG. **20** is a perspective view of a conferencing table assembly that is consistent with at least some aspects of the present invention:

FIG. **21** is a side of plan view of the conferencing table assembly of FIG. **20**;

FIG. **22** is a front plan view of the conferencing table assembly of FIG. **20**;

FIG. **23** is a top plan view of the conferencing table assembly of FIG. **20**;

FIG. **24** is a partially exploded perspective view of the conference table assembly of FIG. **20**;

FIG. **25** is a partially exploded side plan view of the conferencing table of FIG. **20**;

FIG. **26** is an exploded view of the retractor assembly shown in FIG. **24**;

FIG. **27** is a partially exploded view of the retractor assembly of FIG. **26**;

FIG. **28** is a partially exploded view of the deck assembly of FIG. **24**;

FIG. **29** is a top plan view of the cable tie bracket shown in FIG. **28**;

FIG. **30** is a top plan view of the deck member of FIG. **28**;

FIG. **31** is a perspective view of an exemplary handset and cable assembly including video and audio cables and jacks;

FIG. **32** is a perspective view of the deck assembly shown in FIG. **28**;

FIG. **33** is a partial cross sectional view showing the wire management assembly installed in a leg cavity with a single handset in a stowed position;

FIG. **34** is similar to FIG. **33**, albeit showing the single handset pulled out of a cavity;

FIG. **35** is similar to FIG. **33**, albeit showing the handset in a use position with a cavity door member in a closed position;

FIG. **36** is an exploded view of the totem/display assembly shown in FIG. **20**;

FIG. **37** is an exploded view of the bridge assembly of FIG. **20**;

FIG. **38** is a perspective view of a two display conferencing table;

FIG. **39** is a cross sectional view of a handset that includes LEDs for signaling different conditions;

FIG. **40** is a perspective view of yet another table assembly that is consistent with at least some aspects of the present invention;

FIG. **41** is a front plan view of the assembly shown in FIG. **40**;

FIG. **42** is similar to FIG. **41**, albeit showing the assembly with various housing components removed;

FIG. **43** is a side plan view of the assembly shown in FIG. **40**;

FIG. **44** is a perspective showing a wire management assembly that forms part of the assembly shown in FIG. **40**;

FIG. **45** is a perspective view showing a sub-set of the housing components shown in FIG. **44**;

FIG. **46** is a perspective view showing handsets, associated cables and pulleys used to form part of the assembly shown in FIG. **44**;

FIG. **47** is a front perspective view of the sub-assembly of FIG. **46**, albeit without data jacks; and

FIG. **48** is a perspective view of a wire management system including a single on/off button.

DETAILED DESCRIPTION OF THE INVENTION

Referring now to the figures wherein like reference numerals correspond to similar elements throughout the several views and more specifically, referring to FIGS. **1** through **4**, one embodiment of a collaborative workspace

configuration **10** that is consistent with at least some aspects of the present invention is illustrated. Workspace configuration **10** includes a display system **12** and a conference table assembly **14**. Various mechanical aspects of configuration **10** are described in co-pending U.S. patent application Ser. No. 12/250,192 that was filed on Oct. 13, 2008 and is titled "Conference Table Assembly" and which is incorporated herein by reference. U.S. patent application Ser. No. 12/250,192 has issued as U.S. Pat. No. 8,074,581.

Hereafter, general mechanical features of the configuration **10** are described that are useful in understanding operation of the current invention. The prior application referenced above should be referred to for more detail regarding the mechanical aspects of configuration **10**.

Display system **12** includes a totem or stand support structure **28** and four relatively large flat panel displays **22** *a*, **22** *b*, **22** *c* and **22** *d*. Totem **28** is vertically oriented and includes a front facing surface **32** to which displays **22** *a* through **22** *d* are mounted. Displays **22** *a* through **22** *d* are arranged so that viewing or presentation surfaces face in the same direction and generally away from totem **28**. Displays **22** *a* through **22** *d* are arranged in a two row and two column arrangement. Although not illustrated, totem **28** includes a housing that forms a cavity in which power and data cables can be received to provide power/data to display **22** *a* through **22** *d*.

Conference table assembly **14** includes a support structure **24**, a table top member **26** and a bridge assembly **30**. Support structure **24** generally forms a vertical leg to support top member **26** in a horizontal orientation. Structure **24** also forms an internal cavity for receiving various power, data and communication components as well as other mechanical components such as cable take up subassemblies described in the co-pending patent application referenced above.

Bridge assembly **30** secures totem **28** to support structure **24** to stabilize totem in a vertical orientation. In addition, although not illustrated, bridge assembly **30** forms an internal channel or cavity for passing power and/or data cables between structure **24** and totem **28**.

Top member **26** is generally a rigid square flat member that forms a top work surface and a central rectilinear opening. A dual door assembly **36** is mounted within the central opening that includes two door members **39**, **41** that have top surfaces that are flush with the top surface of member **26** when the doors are closed. Each door in hinged to open to allow access to table components there below. Together the doors are dimensioned so that when closed as best seen in FIG. **4**, each door **39** and **41** forms a gap (see **43** and **45**) with the opening around a peripheral edge for passing cables.

Referring still to FIG. **4**, adjacent the doors **39** and **41** at the edge of the central opening an illuminated button **64** is provided. Although not illustrated, button **64** is linked to a power source. Button **64** is a dual state push button and, in at lease some embodiments, is illuminated all the time. In some embodiments, button **64** may include a universal power indicator symbol indicating to users that the table is powered. By illuminating button **64** even when the table configuration **10** is not being used, the button invites users to start up a conferencing session and is an indicator that the configuration **10** is operable and ready to use. When not in use button **64** will have a first illuminated color (e.g., white) and when button **64** is selected, the button will be illuminated in a second color (e.g., green) confirming for the user that the button has been selected.

Referring specifically to FIG. **2**, components mounted within structure **24** below top member **26** include a switching device **16**, a user interface assembly **19** and a power source **55**. Referring also to FIG. **3**, where switching device **16** is shown in four different views, switching device **16**, as the label implies, can be used to switch different input video/audio sources at different input ports to change which input is feeding video/audio output ports. To this end, exemplary switching device **16** includes six input ports collectively identified by numeral **17** (three on either end of device **16**), a video conference input port **42**, and a PC input port **40**. Device **16** includes four video/audio output ports collectively labeled **44**. In operation, switching device **16** can be controlled to output video/audio from any one of the input ports **17**, **40** or **42** to any one or more of output ports **44**. In addition, switching device **16** is controllable so that input from two, three or four of the different inputs **17**, **40** or **42** can be output simultaneously to different ones of the output ports **44**.

Referring again to FIG. **2**, interface assembly **19** includes a deck member **21** and six selectable control interfaces referred to as "puck" assemblies, two of which are labeled **20**. Deck member **21** forms a top surface **25** for receiving and supporting the puck assemblies **20** when the puck assemblies are in stored positions below covers **39** and **41** (see again FIG. **1**). Each puck assembly **20** is similarly constructed and operated in a similar fashion and therefore, in the interest of simplifying this explanation, only one puck assembly **20** will be described here in detail.

Referring also to FIG. **4**, exemplary puck assembly **20** includes a puck **48** and first and second video/audio cables **50** and **52**, respectively. Cable **50** is used to link puck **48** to a computer/laptop audio/video output port or other video source while cable **52** links puck **48** through a circuitous path to one of the six input ports **17** shown in FIGS. **2** and **3**. In at least some embodiments, each cable **52** can be taken up by a take up assembly (not shown) below deck member **21** as an associated puck **48** is moved from a use position on top of top member **26** (see FIG. **4**) to a storage position as shown in FIG. **2**. For more detail regarding one possible take up assembly, see U.S. patent application Ser. No. 12/250,192 referenced above. As seen in FIG. **4**, when a puck **48** is pulled into a use position on top of member **26**, cable **52** can pass through gap **43** when door **39** is closed.

Referring still to FIG. **4** and also to FIG. **5**, exemplary puck **48** includes a disc or puck shaped housing **49** that supports a plurality of components including a processor **71**, an on/off button **58**, first through fourth selectable controls or control buttons **60** *a*-**60** *d*, four illumination devices **73** *a* through **73** *d* and an illumination ring **56**. Processor **71** may be a programmable microprocessor or may be configured via digital components. Processor **71** is linked to each of cables **50** and **52** and can sense when cabled **50** is linked to a video/audio source. Processor **50** is also linked to each of buttons **56** and **60** *a*-**60** *d* to sense when any of those buttons are selected. Processor **50** is further linked to each of illumination devices **73** *a* through **73** *d* and ring **56** for providing power to and cutting power from each of those devices.

In at least some embodiments each of illumination devices **73** *a*-**73** *d* and ring **56** can be controlled to generate light in two different colors such as white and green or can be dark so that at least two or three different states can be indicated in visually distinguished ways.

As seen in FIG. **4**, each button **60** *a*-**60** *d* has a different number 1, 2, 3 or 4 indicated thereon. Here, each number 1, 2, 3 or 4 corresponds to a different one of the display screens **22** *a* through **22** *d* in FIG. **1**. For instance, button **60** *a* labeled

"1" may correspond to screen **22** *a*, button **60** *b* labeled "2" may correspond to screen **22** *b*, and so on.

Referring again to FIGS. **4** and **5**, processor **71** is programmed or configured to determine when a video source is linked to cable **50** as well as when any of buttons **58** or **60** *a*-**60** *d* is selected and to indicate a current state of the puck and associated video source via the illumination devices **73** *a*-**73** *d* and ring **56** for the benefit of both the puck user and others gathered around configuration **10**. In addition, processor **71** provides an indication of the display configuration **12** to the puck user. In this regard, in a system including four displays (e.g., the number of common displays is M) as in FIG. **1**, all four screen selection buttons **60** *a*-**60** *d* (where N is the number of selection buttons) may be illuminated prior to selection to indicate four options that can be selected by the puck user. Where another configuration includes less than four displays, only a subset of buttons **60** *a*-**60** *d* would be illuminated prior to selection. For instance, in FIG. **2**, where the configuration only includes two displays and hence there are only two display options, only buttons **60** *a* and **60** *b* would be illuminated prior to selection to indicate only two options to select from. Here, switching device **16** may be configured to sense the number of output ports **44** to which display screens **22** *a*-**22** *d* or other output devices (e.g., projectors) are linked and provide a feedback signal via cable **52** to processor **71** to indicate the number of buttons **60** *a*-**60** *d* to illuminate.

In at least some embodiments the top surface of puck **48** may be formed of a black plastic where, when a button **60** *a*-**60** *d* is not illuminated, the number 1, 2, 3 or 4 appears dark and blends in with the top puck surface so that the number 1, 2, 3 or 4 is essentially unnoticeable.

By providing a puck **48** that includes four screen selection buttons **60** *a*-**60** *d*, a single puck type may be manufactured that can be used with any conferencing configuration including one, two, three or four common displays which reduces design and manufacturing costs appreciably.

Referring again to FIG. **4**, ring **56** is a ring shaped member disposed generally along a circumferential edge of the top surface of the puck **48**. because puck **48** has a generally low profile, light from ring **56** is relatively easily viewable from all directions above top member **26**. Thus, from any vantage point above top member **26** conference participants can see the visual state of ring **56**.

While controls **60** *a*-**60** *d* are described here as buttons, it should be appreciated that controls **60** *a*-**60** *d* may take any of several different forms. For instance, controls **60** *a*-**60** *d* may be provided via a touch sensitive interface surface including a separately selectable location or area associated with each button **60** *a* through **60** *d*.

In at least some embodiments ring **56** is not illuminated until a video/audio source (e.g., a laptop) is linked to cable **50**. Once a source is linked to cable **50**, if the linked source is supplying video/audio to one or more of displays **22** *a*-**22** *d* (see FIG. **1**), ring **56** is illuminated in one color (e.g., white) and if the linked source is not currently driving any of displays **22** *a*-**22** *d*, ring **56** is illuminated in a second color (e.g., green). Thus, ring **56** is useful as an indicator to conference participants around table top **26** that identifies the person or persons that are currently displaying information on one or more of the common displays **22** *a*-**22** *d*.

Referring again to FIGS. **1** and **4**, after a laptop or other video/audio source is linked to cable **50** to provide video via cable **50** to display **22** *a*, button **60** *a* is selected, to provide video to display **22** *b*, button **60** *b* is selected, and so on. Prior to each of buttons **60** *a*-**60** *d* being selected, in at least some embodiments, the buttons **60** *a*-**60** *d* are not illuminated. In other embodiments, prior to selection, each button **60** *a*-**60** *d* may be illuminated, like ring **56**, in one color and after selections, each selected button may change to a second illuminated color to distinguish selected from unselected buttons **60** *a*-**60** *d*.

Referring again to FIGS. **4** and **5**, central button **58** is provided as an on/off button which may be selected by a puck user to effectively cut off the user's linked laptop or other source from driving displays **22** *a*-**22** *d*. Thus, where a laptop is linked to cable **50** but a user does not want to inadvertently present laptop information via the common displays, the user can simply press button **58** to render puck **48** ineffective at passing on video/audio to the displays. Here, when button **58** is selected to "turn off" the puck **48**, ring **56** and buttons **60** *a*-**60** *d*, in at lease some cases, are no longer illuminated.

Referring now to FIGS. **1** and **4**, prior to any laptop or other source being linked to configuration **10** to drive displays **22** *a*-**22** *d*, indicator button **64** may be illuminated with a white color to indicate to persons in the vicinity that configuration **10** is powered and ready for use. Hereinafter, a white light will be indicated in the figures via a double hatch (see **64** in FIG. **4**) and a green light will be indicated via a single hatch (see **64** in FIG. **6**). When a person wants to use configuration **10**, the person presses button **64** which causes button **64** to change from white to green as shown in FIG. **6** to signal to the person that the system is powering up.

In addition, when button **64** is pressed, in at least some embodiments, a short video clip is presented via one or more of displays **22** *a*-**22** *d* providing simple instructions to the person who pressed button **64** regarding how to use configuration **10**. Referring to FIGS. **7**-**9**, exemplary screen shots showing images consistent with a simple instruction video are illustrated. In FIG. **7**, a graphic of the utility bay door **39** opening **51** adjacent a laptop image **53** (i.e., a source image) is shown to indicate that one of the doors **37** or **41** (see FIG. **1**) should be opened. In FIG. **8** a puck **57** is shown moving out of the cavity under the door **51** and onto the work surface where the cable **59** associated with the puck is linked to the laptop **53**. In FIG. **9** a phantom user's hand image **61** is shown moving toward and over the puck image **57** to select one of the buttons provided thereby. Here, the instructional video clip is intentionally extremely simplified and includes only three steps "open", "connect" and "share." In at least some embodiments the instructions are only provided once and the duration is extremely short (e.g., approximately 15 seconds) which gives a user a sense that configuration **10** is particularly easy to use.

Following the instructions, as shown in FIG. **10**, a user pulls one of the pucks **48** from the cavity below a door **39** or **41** and links a laptop **69** to the puck **48** via cable **50** (see also FIG. **1**). Once a laptop **69** is linked to cable **50**, ring **59** as well as selectable buttons **60** *a*-**60** *d* are illuminated white (see double crosshatch in FIG. **9**) to indicate to the laptop user that the user is linked and can opt to present information from the user's laptop screen via any one or combination of displays **22** *a*-**22** *d* corresponding to illuminated buttons **60** *a*-**60** *d*, respectively. Here, the white light ring **56** also indicates that currently the user of puck **48** is not presenting via any of displays **22** *a*-**22** *d*.

Referring to FIG. **11**, when a puck user wants to present information from her laptop **69** display via display screen **22** *a*, the user presses button **60** *a* to indicate intention to drive display **22** *a*. Once button **60** *a* is selected, four things happen. First, information currently displayed via display **22** *a* is replaced by the information from the user's laptop **69** display. Second, if a different laptop was previously pre-

senting information via display **22** *a* when button **60** *a* is selected, the other user's puck illumination may change. For instance, if the other user was only displaying via display **22** *a* when displaced, the other user's puck's ring **56** will change from green back to white illumination indicating the user is no longer driving any of displays **22** *a*-**22** *d*. As another instance, where another user was driving each of displays **22** *a* and **22** *c* when button **60** *a* is selected, the other user's puck ring will remain green after displacement from screen **22** *a* to indicate that the other user is still driving display **22** *c* despite being displaced from display **22** *a*. In addition, in this case, the other user's puck button **60** *a* will be illuminated white after displacement from screen **22** *a* while button **60** *c* will remain green indicating that the other user is still driving display **22** *c*.

Third, to indicate that the user of puck **48** in FIG. **10** is now driving at least one of displays **22** *a*-**22** *d*, ring **56** on puck **48** changes from white to green (see single cross hatch ring in FIG. **10**). Fourth, to let the puck user know which displays **22** *a*-**22** *d* she is currently driving, button **60** *a* illumination changes from white to green. Here, other buttons **60** *b*-**60** *d* that were not selected remain white (i.e., they are shown as double cross hatched).

If the user next wants to display her laptop information via displays **22** *a*-**22** *c*, referring to FIG. **12**, the user selects button **60** *b* and **60** *c* which cause information from the user's laptop screen to replace any existing information on displays **22** *b* and **22** *c*, causes other puck illumination to change accordingly and causes buttons **60** *b* and **60** *c* to change from white to green illumination. At this point, as shown in FIG. **12**, each of buttons **60** *a*-**60** *c* and ring **56** are illuminated green while button **60** *d* remains white.

To relinquish control of a display **22** *a*-**22** *d* currently controlled, in at least some embodiments, the button **22** *a*-**22** *d* corresponding to a display **22** *a*-**22** *d* can be selected a second time. In the iterative, to relinquish control of displays **22** *a*-**22** *d*, on/off button **58** may be selected. Once display control is relinquished, puck **48** illumination is updated accordingly.

After a configuration session is over and all sources have been disconnected from cables **50**, the system will eventually time out (e.g., approximately 15 minutes) and will power down so that button **64** returns to its white illuminated state (see again FIG. **4**).

Referring now to FIG. **13**, a second configuration **10** *a* that is consistent with at least some aspects of the present invention is illustrated. Configuration **10** *a* is different than configuration **10** in two general ways. First, configuration **10** has an oval table shape top member **260** as opposed to rectangular. Second, configuration **10** includes only two displays **122** *a* and **122** *d* instead of four. Here, referring also to FIG. **14**, in at least some embodiments, it is contemplated that when a laptop **69** is linked to a puck **48** initially so ring **56** is illuminated white, only buttons **60** *a* and **60** *b* would illuminate white thereby indicating to a user that there are only two display choices **122** *a* and **122** *b* instead of four. Other operation of configuration **10** *a* is similar to that described above.

Referring now to FIG. **15**, in at least some embodiments it is contemplated that laptops **69** and other visual/audio sources may be able to wirelessly link up to a configuration **10** *b* processor via a wireless access device **100** or the like. In this case the configuration **10** *b* may not need a utility bay and will not require cable hookups or physical pucks. Here, where a source **69** is associated with the configuration for control purposes, referring also to FIG. **16**, a software "widget" puck representation or control interface representation (hereafter a "widget") **48** *a* may be provided on screen. In this case it is contemplated that the widget **48** *a* will have an appearance similar to the appearance of interface **60** and button **58** where different widget areas corresponding to buttons **60** *a*-**60** *d* and **58** will be selectable via a mouse controlled cursor or touch (in the case of a touch sensitive display) for selection. In this case it is contemplated that when a virtual button on the widget is selected, the functionality and illumination described above with respect to puck **48** would occur. When the widget ring **56** is illuminated, the laptop could beep or buzz (i.e., create an audible signal of some type) to indicate which laptop has taken control.

In yet another embodiment where a laptop source user has a touch screen phone or other palm type computing device in addition to the laptop/source, a widget may be provided via the palm type device where the widget size can be enlarged to include much of the display. To this end see FIG. **17** that shows a palm type device **120** that includes a large touch screen where a virtual puck palm device **120** and laptop **69** would have to be associated in some way so that palm device control would cause the correct/associated laptop information to drive appropriate displays **22** *a*-**22** *d*.

In a wireless system where a widget or virtual control interface is presented via a display screen, the control interface may take any of several different forms. For instance, where a configuration includes four common displays (see FIG. **1**), the control interface **130** may have an appearance as in FIG. **18** that shows screen selections in a pattern that mimics the pattern of the four display screens **22** *a*-**22** *d*. Where a system includes only two displays (see FIG. **13**), the virtual control interface may only include an image of two selectable displays, and so on.

Referring to FIG. **19**, in wireless embodiments, a mechanical control interface **140** akin to puck **48** described above may be provided where the interface **140** links to a USB port or the like on a laptop **69**. Here, interface **140** operates in the same fashion as puck **48** described above except that control signals from interface **140** are provided to a switching device wirelessly through the laptop. In this case interface **140** still provides a visual queue to conference participants using configuration **10** *b* indicating which laptop(s)/source(s) is being used to drive the displays.

In some embodiments one or more projectors (not illustrated) may replace the displays **22***a*-**22***d*. Where a system includes a single projector, the projected image may be divided into two, four, etc., separate presentation spaces where each switching device output **44** drives a different one of the presentation spaces so that multiple sources can be used to display in different spaces simultaneously.

Above the specification of U.S. Pat. No. 8,074,571 was incorporated by reference in its entirety. Here, we present the U.S. Pat. No. 8,074,571 specification in full in the interest of providing a single document that includes a complete specification.

Small group (e.g., 4 to 8 attendees) conference tables have been designed that include one or more large display screens adjacent a table top edge or wall mounted or ceiling hung display or projection screens offset a distance from a table top edge. Here, the idea has been to provide information at or near a table edge for attendees to refer to during discussions and presentations. In many cases attendees use laptops or other digital information sources to drive the information presented via the display. To enable laptops to be powered and to access network data, power and data receptacles are often provided within conference tables (e.g., below grommet doors or covers that are flush with the top surface of a

table top). A laptop user typically uses her own power and data cables to link to the receptacles. In addition, conference rooms are often equipped with audio and video cables to link a laptop to a display or to a projector for controlling presented information.

In many cases it is desirable to allow several attendees to control displayed information at different times during a conference. One way to allow several attendees to present information via a display is to sequentially have each presenter link to the display or projector via the audio and video cables. Here, transitions between presenters take time and are extremely disruptive.

One other way to allow several attendees to present is to provide separate audio and video cables for each presenter and a switcher device that enables each of the attendees to take control of the display screen via selection of a button associated with the presenters audio and video cables. One such switcher/cable/button assembly of this type is the DTS-TS8 switcher assembly by Elecom that provides eight separate audio/video cable assemblies and eight associated buttons along with a switcher that has eight input ports and one screen output port.

While a switcher and associated cables enable relatively quick transitions between presenters, these solutions typically require a large number of cables to be strewn across the top surface of a conference table. To this end, in addition to audio and video cables, power and data cables are often disposed on the top surface of the conference table and the garble of cables is unsightly and impedes use of the table top for other purposes (e.g., laying out of papers, etc.).

In addition, because the source selection buttons and associated audio and video cables are needed to interface with the switcher, these cables are typically kept with the switcher. For instance, where a switcher is to be used in a specific conference room, the audio/video/control cables (e.g., eight) are typically kept in the specific conference room and usually will be left linked to the switcher device for subsequent use. Thus, when audio/video/control cables are not being used (e.g., after a conference has been completed), the cables often remain strewn across a table top and the overall scene is unsightly.

Some conference table power and data/communication cable management solutions have been developed. To this end, cable systems have been developed that include spring loaded cable dispensers for dispensing network communication types cables (e.g., CAT-5 cables) for use at a conference table. Here, a dispenser housing is provided that mounts to the top surface of a table top or the like and a plurality (e.g., 8) of cable dispensers are mounted within the housing. One end of each cable can be pulled against the force or the spring out of each dispenser and plugged into a laptop. When a cable is not in use, the cable can be retracted via the spring force back into the dispenser and housing. While this solution works well for relatively thin communication type cables, this solution has several shortcomings. First, because the dispenser housing is located on top of the table top, the housing is always observable and reduces the elegance of an associated conference table and space. Second, where larger diameter cables such as audio and video cables are used, a simple spring loaded dispenser may need to be relatively large and the spring force would have to be relatively high to accomplish the retracting activity and therefore the overall size of the dispensing system would have to be increased appreciably. Thus, a spring loaded table top mounted dispensing system is not practical for many applications and, at best, solves the data cable management problem in a relatively unsightly manner.

In addition, conference tables are known that include power and data receptacles mounted below a table top member where the top member forms openings for passing cables for receptacle hookup and where cable receiving and retaining cavities have been formed adjacent the receptacles for receiving and storing excess power and data cable lengths. Thus, for instance, where a data cable is ten feet long but a laptop is positioned on a table top surface three feet from a data port/receptacle, the seven additional feet of cable can be tucked away in the cable receiving cavity under the top member.

After a conference has been completed, power and data cables often are removed from the conference space. To this end, currently most laptop computers come with their own power and data cables and therefore attendees plug in to receptacles using their own power and data cables which are removed after use. Thus, in most cases power and data cables do not pose an aesthetic problem when a conference is not being conducted within a conference space.

Thus, while solutions for managing power and data cables have been developed, similar solutions have not been developed for audio/video/control cables that form part of a switcher system and that typically remain within a conference space along with a switcher device after a conference has been completed.

It has been recognized that a storage space can be provided below a table top opening for receiving control cables when the cables are not in use or to receive portions of control cables that are not in use. It has also been recognized that a weight of some type can be linked to each of the control cables below the top surface where the weight tends to pull the cable into the space below the table top to aid a cable user in moving the cable back into the space when not in use. Moreover, it has been recognized that the weight can substantially automatically take up any slack in a control cable between a handset that includes a control button and the table top opening so that excess cable is removed from the table top surface.

The handset can be constructed to be relatively heavy so that the handset can be placed on the table top surface and remain in its disposed position despite the weight tending to pull the handset and cable back into the storage space. Also, to this end, the handset may include rubber or tacky plastic strips or foot members on an undersurface to help maintain the position of the handset after placement on a work surface or the like. Moreover, the handset may include rubber strips or the like on a side or circumferential surface to help retain the handset in a receiving cavity during storage. The handset may, in some cases, include audio and/or video jacks that can be linked to a laptop computer or the like. Here, the handset weight serves the additional purpose of reducing force applied to laptop audio and video jacks. In at least some cases a deck member may be provided in the space below the table top member and on which the handsets can be placed and supported when not in use and door members may be provided to substantially cover (e.g., leave a slot open along one or more edges for cables to pass through) the opening when desired.

Consistent with the above, at least some at least some embodiments of the invention include a conferencing assembly for use with at least one computer, the assembly comprising a table top member having top and bottom surfaces and forming a table top opening, a leg support structure supporting the top member is a substantially horizontal orientation, a display screen associated with the top member and supported adjacent the top surface, a switcher for controlling input to the display screen, a plurality of hand-

sets, each hand set including a selector button usable to send a signal to the switcher thereby causing the switcher to link a computer associated with the selector button to the display, a plurality of handset cables, each handset cable having first and second ends linked to the switcher and an associated selector button, respectively, for passing signals from the selector buttons to the switcher, a take up assembly including a separate weight for each of the handset cables, the take up assembly disposed below the top member and aligned with the table top opening, each handset cable linked to an associated weight, each weight applying a force tending to pull the second end of the associated handset cable into the opening.

In at least some cases each weight includes a pulley wheel, each handset cable passing around an associated pulley wheel. In at least some cases each weight further includes first and second plates mounted on opposite sides of the pulley wheel. In at least some cases the plates are mounted to the pulley wheel axis via a pin.

In at least some cases the assembly further includes a guide structure, the guide structure forming a separate substantially vertical channel for each of the pulley wheels, each pulley wheel moving up and down within a channel as the second end of an associated cable is pulled away from and allowed to move toward the opening, respectively. In at least some cases the assembly includes at least four separate handsets. In at least some cases the take up assembly further includes a deck member having a top deck surface below the top surface of the table top member, the deck member forming a separate opening for each of the handsets, each cable passing through a separate one of the openings formed by the deck member, the handsets received on the deck surface of the deck member thereby limiting downward movement through the opening formed by the deck member.

In at least some cases the deck surface forms a recess proximate each of the openings formed by the deck member, each recess formed to receive an associated one of the handsets. In at least some cases the deck surface is substantially parallel to the top surface of the table top member. In at least some cases the assembly further includes at least one utility wall member extending upward from the deck surface below the table top member and at least one of a power and a data receptacle mounted in the wall member for access through the table top opening.

In at least some cases the assembly further includes a utility island extending upward from the deck surface, the utility wall forming a circumferential wall about the island, the island further including a top mounting surface that is substantially parallel to the top surface of the table top member. In at least some cases the island includes at least first, second, third and fourth receptacles, the first and second receptacles facing in substantially opposite directions and the third and fourth receptacles facing in substantially opposite directions. In at least some cases the assembly further includes first and second door members hingedly mounted to the mounting surface for movement between open and closed positions, each door member including a top door surface, when the door members are in the closed positions, the door members substantially closing the table top opening and the door surfaces substantially flush with the top surface of the table top member. In at least some cases an opening edge defines the shape of the table top opening, the door members forming a gap with the opening edge when in the closed positions.

In at least some cases the deck member has a circumferential edge, the assembly further including a well wall member extending upward from the circumferential edge of the deck member to the bottom of the table top member so that the deck and the well wall member form a cavity below the table top member for receiving cables and the like. In at least some cases each handset cable further includes a video cable and each handset further includes a video jack proximate the button for linking to an associated computer.

In at least some cases each handset cable further includes an audio cable and each handset further includes an audio jack proximate the button for linking to an associated computer. In at least some cases each handset weighs at least one pound.

Some embodiments include a conferencing assembly for use with at least one computer, the assembly comprising a table top member having top and bottom surfaces and forming a table top opening, a leg support structure supporting the top member is a substantially horizontal orientation, a display screen associated with the top member and supported adjacent the top surface, a switcher for controlling input to the display screen, a plurality of handsets, each hand set including a selector button usable to send a signal to the switcher thereby causing the switcher to link a computer associated with the selector button to the display, a plurality of handset cables, each handset cable having first and second ends linked to the switcher and an associated selector button, respectively, for passing signals from the selector buttons to the switcher, a deck member having a top deck surface below the top surface of the table top member and aligned with the table top opening, the deck member forming a separate opening for each of the handsets, each handset cable passing through a separate one of the openings formed by the deck member, the handsets received on the deck surface of the deck member thereby limiting downward movement through the openings formed by the deck member and a take up assembly including a separate pulley wheel for each of the handset cables, the take up assembly disposed below the deck member, each handset cable linked to an associated pulley wheel, each pulley wheel applying a force tending to pull the second end of the associated handset cable toward the deck top.

In some embodiments the leg support structure form a leg cavity, the deck member and take up assembly disposed within the leg cavity. In some embodiments the switcher is also disposed within the leg cavity. Some embodiments further include a totem assembly and a bridge member, the totem assembly having top and bottom ends and a mounting surface, the totem disposed adjacent the top member with the mounting surface above the top surface of the table top member, the bridge member having first and second ends secured to the leg support structure and the totem assembly, respectively, the display screen mounted to the mounting surface adjacent the top surface of the table top member.

Other embodiments include a conferencing assembly for use with at least one computer, the assembly comprising a table top member having top and bottom surfaces and forming a table top opening, a leg support structure supporting the top member is a substantially horizontal orientation, a display screen associated with the top member and supported adjacent the top surface, a switcher for controlling input to the display screen, a plurality of handsets, each hand set including a selector button usable to send a signal to the switcher thereby causing the switcher to link a computer associated with the selector button to the display, a plurality of handset cables, each handset cable having first and second ends linked to the switcher and an associated selector button, respectively, for passing signals from the selector buttons to the switcher and a deck member having a top deck surface below the top surface of the table top member and aligned

with the table top opening, the deck member forming a separate opening for each of the handsets, each handset cable passing through a separate one of the openings formed by the deck member, the handsets received on the deck surface of the deck member thereby limiting downward movement through the openings formed by the deck member.

Some cases further include a take up assembly including a separate weight for each of the handset cables, the take up assembly disposed below the deck member, each handset cable linked to an associated weight, each weight applying a force tending to pull the second end of the associated handset cable toward the deck top.

To the accomplishment of the foregoing and related ends, the invention, then, comprises the features hereinafter fully described. The following description and the annexed drawings set forth in detail certain illustrative aspects of the invention. However, these aspects are indicative of but a few of the various ways in which the principles of the invention can be employed. Other aspects, advantages and novel features of the invention will become apparent from the following detailed description of the invention when considered in conjunction with the drawings.

Referring now to the drawings wherein like reference numerals correspond to similar elements throughout the several views and, more specifically, referring to FIGS. **20-25**, the present invention will be described in the context of an exemplary conferencing table configuration or assembly **1010** including a table assembly **1012**, a totem/display assembly **1014** and a bridge assembly **1016**. Table assembly **1012** includes a leg support structure **1018**, a table top member **1020** and wire management assembly **1024**. Referring also to FIGS. **25** and **33**, leg support structure **1018** includes vertical leg members **1076**, horizontal foot members **1080**, a foot rail **1022**, horizontal shoulder members **1077** and a top plate **1079**. In at least some embodiments, four vertical leg members **1076** are provided (only two illustrated) and the leg members are spaced apart to form a rectilinear leg cavity **1082**. Four foot members **1080** extend from the vertical leg members **1076** or other leg structural components (e.g., horizontal members that extend between bottom ends of the vertical leg members **1076**) in four opposite directions that provide stability to the leg members **1076** and other assembly components thereabove. Foot rail **1022** is mounted to the top ends of vertical standoffs (not labeled) that extend up from distal ends of the foot members **1080** and, in the illustrated embodiment, forms a generally square shaped foot rest that circumscribes and is spaced apart from the vertical leg members **1076**.

The top plate **1079** is a rigid rectilinear member that forms a square plate opening **1081** (see FIG. **33** specifically). Top plate **1079** is mounted via welding or mechanical fasteners to the top ends of vertical leg member **1076** opposite foot members **1080** with the plate opening **1081** aligned with leg cavity **1082** there below. Although not illustrated or separately labeled, top plate **1079** forms a plurality of screw holes for passing screws used to mount other assembly components thereto. Screws are used to secure shoulder members **1077** to a top surface **1085** of top plate **1079**. Once shoulder members **1077** are secured to top plate **1079**, internal surfaces **1083** of shoulder members **1077** and the top surface **1085** of top plate **1079** form a separate well or cavity **1069** (see FIG. **33**) that resides generally above leg cavity **1082**.

In at least some embodiments, leg housing member **1030** is a three-sided leg structure that can be slid over and mechanically fasten to the vertical leg members **1076** to enclose the leg channel **1082**.

Referring once again to FIGS. **20-24**, table top member **1020** is a rectilinear, planar and rigid member having top and bottom surfaces **1021** and **1023**, respectively. Referring also to FIG. **33**, top member **1020** forms a central substantially rectilinear opening **1027**.

Referring now to FIG. **24**, wire management assembly **1024** includes first and second door or cover members **1025** and **1026**, respectively, a deck assembly **1045** and a retractor assembly **1052**. Referring also to FIGS. **26**, **27** and **33**, retractor assembly **1052** includes a first slotted wall member **1054**, a second slotted wall member **1056**, a first end wall member **1058**, a second end wall member **1060**, a first bottom plate or bracket **1062**, a second bottom plate or bracket **1064**, seven separate divider members collectively identified by numeral **1066**, six separate pulley/weight assembly collectively identified by numeral **1068**, a first sloped mounting bracket **1070**, a second sloped mounting bracket **1072** and a plurality of screws for securing the retractor assembly components together, at least a subset of the screws collectively identified by numeral **1100**. The first and second slotted wall members **1054** and **1056** are similarly constructed and operate in a similar fashion and therefore, in the interest of simplifying this explanation, only the second slotted wall member **1056** which is best shown in FIG. **26** will be shown here in detail. Slotted wall member **1056** is generally a rigid rectilinear member including an external surface (not labeled) and an oppositely facing internal surface **1103** as well as top and bottom ends **1104** and **1106**, respectively, and first and second lateral edges **1108** and **1110**, respectively. As the label implies, member **1056** forms a plurality of slots collectively identified by numeral **1102** in internal surface **1103**. Each slot **1102** is a straight slot that extends from the top end **1104** to the bottom end **1106** of member **1056** and all of the slots **1102** are parallel to a length dimension of member **1056**. In addition, member **1056** forms threaded openings along each of the top, bottom, first lateral and second lateral edges for receiving shafts of screws to facilitate fastening of other retractor assembly components.

Referring still to FIGS. **26** and **27**, each of the first and second end wall members **1058** and **1060** is similarly constructed and operates in a similar fashion and therefore, only end wall **1058** will be described in any detail. Wall member **1058** is a flat, rigid and rectilinear member that forms mounting openings (not labeled) along first and second lateral edges. The mounting openings formed by member **1058** align with the threaded shaft receiving openings formed in first lateral edge **1108** of member **1056** when wall member **1058** is placed adjacent edge **1108**.

Referring yet again to FIGS. **26** and **27**, first bottom plate or bracket **1062** is an elongated flat and rigid bracket that has a length dimension substantially equal to a width dimension of slotted wall member **1056** between the lateral edges **1108** and **1110** of member **1056** and forms openings for passing screws for attaching member **1064** to bottom edge **1106** of member **1056**. Similarly, second bracket **1062** is a rectilinear rigid bracket having a length dimension equal to a width dimension of first slotted wall member **1054**.

Divider members **1066** are rigid rectilinear members that each have thickness dimension substantially equal to a width dimension of one of the slots **1102** formed by member **1056** so that a lateral edge of each divider member **1066** is receivable within one of the slots **1102**. Divider members **1066** have length dimensions substantially equal to a length dimension of slotted wall member **1056** and have a width

dimension such that, when retractor assembly **1052** is assembled, each divider member **1066** traverses the distance between slotted wall member **1054** and **1056** with lateral edges of each of members **1066** received in oppositely facing slots formed by slotted wall members **1054** and **1056**. Each divider member, in at least some embodiments, may be formed as a thin Plexiglas member.

Referring once again to FIGS. **26** and **27**, each of the pulley/weight assemblies **1068** is similarly constructed and operates in a similar fashion and therefore, in the interest of simplifying this explanation, only one of the weight assemblies **1068** will be described in some detail. Referring specifically to FIG. **26**, an exemplary weight assembly **1068** includes a pulley wheel **1118**, first and second weight plates **1120** and **1122**, respectively, and three post members, one of which is identified by numeral **1121**. Pulley wheel **1118** forms an annular cable receiving channel **1123** and a central hole (not labeled). Each of plates **1120** and **1122** is a generally triangular rigid plate and forms three openings, one at each of the corners of the plate. In at least some embodiments, plates **1120** and **1122** are formed of thick sheet metal so that they are relatively heavy. One corner of each plate is mounted to pulley wheel **1118** via one of the posts **1121** that passes through each of the plates **1120** and **1122** and through the central pulley wheel opening. The other two corners of the plates **1120** and **1122** are mounted via the other two posts **1121** below the circumferential edge of pulley wheel **1118**. The plates **1120** and **1122** are mounted to wheel **1118** in a loose fit manner so that as the wheel **1118** turns, the plates **1120** and **1122** together hang down therefrom.

Each of the sloped mounting brackets **1070** and **1072** is similarly constructed and operate in a similar fashion and therefore, in the interest of simplifying this explanation, only mounting bracket **1070** will be described here in detail. Bracket **1070** includes an intermediate guide plate **1112**, a first mounting plate **1114**, and a second mounting plate **1116**, where the plates **1112**, **1114** and **1116** is integrally formed, preferably from bent sheet metal. First mounting plate **1114** is an elongated plate that forms openings for passing fastening screws. Similarly, second mounting plate **1116** is an elongated plate member forming openings for passing fastening screws. Intermediate plate **1112** is a flat planar member that traverses the distance between one of the elongated edges of plate member **1114** and one of the elongated edges of plate member **1116**. As best seen in FIG. **33**, plates **1114** and **1116** are substantially perpendicular while plate **1112** forms an angle with each of plates **1114** and **1116**.

Referring once again to FIGS. **26**, **27** and **33**, to assemble retractor assembly **1052**, bottom plate/bracket **1064** is secured to the bottom edge **1106** of slotted wall member **1056**. Similarly, bottom plate/bracket **1064** is secured to a bottom edge of slotted wall member **1054**. The first and second sloped mounting brackets **1070** and **1072** are secured, via screws or other mechanical fasteners, to the internal surfaces (e.g., see **1103** in FIG. **26**) of slotted wall members **1056** and **1054**, respectively, near the top edges (e.g., see **1104** in FIG. **26**) thereof. First end wall **1058** and second end wall **1060** are secured via screws **1100** to the first and second lateral edges **1108** and **1110** of wall member **1056** and so that end wall members **1058** and **1060** extend in the same direction. The subassembly including sloped mounting bracket **1072**, slotted wall member **1054** and bracket **1062** are next positioned between the distal elongated edges of wall members **1058** and **1060** and the subassembly is fastened at that location via screws **1100**.

Referring still to FIGS. **26** and **27**, divider members **1066** are next slid into the oppositely facing slots **1102** formed by slotted wall members **1056** and **1054**. Here, it should be appreciated that the bottom plates/brackets **1062** and **1064** stop the divider members **1066** from sliding completely through the other assembled components. At this point the retractor assembly components already assembled form six separate pulley wheel/weight receiving channels collectively identified by numeral **1124** (see FIG. **27**).

Referring now to FIGS. **28**, **29** and **30**, deck assembly **1045** includes a deck member **1046**, six separate hand sets collectively identified by numeral **1048**, control cables collectively identified by numeral **1050** and a cable tie bracket **1178**. Deck member **1046** is a generally rectilinear rigid member including first and second end edges **1155** and **1157**, respectively, and first and second lateral edges **1159** and **1161**, respectively. Deck member **1046** forms a top deck surface **1152**. A deck island **1154** extends upward from top surface **1152**. In the illustrated embodiment, island **1154** is an elongated island that extends between first and second end edges **1155** and **1157** and that is centrally spaced between lateral edges **1159** and **1161**. Island **1154** is formed by a circumferential wall **1160** including, generally, first, second, third and fourth substantially upright wall members **1170**, **1172**, **1174** and **1176** (see specifically FIG. **30**) and a top wall that forms a top mounting surface **1162**. First and second island wall members **1170** and **1172** are substantially flush with deck edges **1155** and **1157**, respectively, and face in opposite directions. Wall members **1174** and **1176** slant slightly toward each other from top deck surface **1152** toward the top mounting surface **1162** and generally face in opposite directions. Mounting surface **1162** is substantially parallel to deck top surface **1152**. The island walls **1170**, **1172**, **1174** and **1176** together form an internal cavity (not illustrated or labeled) in which power and data receptacle boxes or hardware may be mounted. Each wall member **1170**, **1172**, **1174** and **1176** forms at least one opening for receiving a power and/or data outlet connector. In the illustrated embodiment, each of walls **1170** and **1172** forms a single opening for a power outlet (see **1166** in FIG. **28**) while each of walls **1174** and **1176** forms four substantially equi-spaced power outlets **1166** and three data outlets, two of which are collectively identified by numeral **1168**. Island hinge members **1164** are formed or fastened to the top mounting surface **1162** for connecting the door members **1025** and **1026** in a manner to be described in more detail below.

Referring now to FIGS. **28** and **30**, the top surface **1152** of deck **1046** forms six separate deck handset cavities collectively identified by numeral **1156**. Three of the handset cavities **1156** are provided between island **1154** and lateral edge **1161** while the other three handset cavities **1156** are provided between island **1154** and other lateral edge **1159**. Each of cavities **1156** is dimension and, in at least some embodiments, shaped, to snuggly receive one of the handsets **1048** when the handset is in a stowed position. Deck member **1046** also forms a cable passing opening **1158** in each of the handset cavities **1156** for, as the label implies, passing one of the handset cables **1050**.

Referring specifically to FIG. **30**, the cable passing openings between island **1154** and edge **1159** are offset from or staggered between the openings between island **1154** and edge **1161**. Thus, in FIG. **30** observe that openings **1158** adjacent edge **1159** are formed in the top portion of associated cavities **1156** as illustrated while the openings **1158** adjacent edge **1161** are formed in the bottom portion of associated cavities **1156**. In addition, at each of its four

corners, deck member **1046** forms a screw passing opening, one of which is identified by numeral **1165** in FIG. **28**. In at least some embodiments deck member **1046** is formed of molded plastic material.

Referring still to FIG. **28** and also to FIG. **29**, cable tie bracket **1178** is a rigid bracket, preferably formed of bent sheet metal, that includes a first mounting flange plate **1180**, a second mounting flange plate **1182**, an intermediate floor member **1184**, a first wall member **1186** and a second wall member **1188**. The mounting flange plates **1180** and **1812** are each elongated rectilinear members that form screw passing openings and are arranged to be co-planar and substantially parallel to each other and spaced apart from each other. Wall member **1186** is a rectilinear elongated member and is integrally formed along one of its long edges with one of the long edges of the first flange plate **1180**. Wall member **1186** forms a right angle with flange plate **1180**. Similarly, wall member **1188** is an elongated rectilinear member that is mounted along one of its long edges to one of the long edges of flange plate **1182** and forms a right angle with plate **1182**.

Intermediate floor member **1184** is a rigid rectilinear member having opposite edges linked to edges of wall member **1186** and **1188** opposite plates **1180** and **1182**. Thus, facing surfaces of wall members **1186** and **1188** and a top surface of intermediate wall member **1184** form a cavity or channel. Three slots (two of which are identified by numeral **1190**) are formed in flange plate **1180**, first wall member **1186** and an adjacent portion of intermediate floor member **1184** where each of the three slots is continuous through members **1180** and **1186** and passes into a portion of intermediate wall member **1184**. Similarly, three slots **1192** are formed continuously through flange plate **1184**, wall member **1188** and a portion of intermediate floor member **1184**. The slots **1190** and **1192** are interleaved with each other so that, when bracket **1178** is mounted to an undersurface of deck member **1046**, slots **1192** align with deck openings **1158** thereabove that are formed between island **1154** and lateral edge **1159** and slots **1190** align the deck openings **1158** thereabove that are between island **1154** and lateral edge **1161**. In other words, slots **1190** align with deck openings **1158** formed on an opposite side of island **1154** and slots **1192** align with deck openings **1158** formed on an opposite side of island **1154**.

Referring to FIGS. **28** and **29**, half dome bars **1194** and **1196** are secured to a top surface of floor member **1184** approximately midway along the lengths of the portions of slots **1190** and **1192** formed in floor member **1184** so that distal ends of the slots **1190** and **1192** are open and form exit ports **1198** and **1200**. As the label implies, each half dome bar **1194** and **1196** forms a smooth half dome surface and has a half dome cross sectional shape.

Referring again to FIG. **28**, each of the handsets **1048** is similarly constructed and operates in a similar fashion and therefore, in the interest of simplifying this explanation, the handsets **1048** will only be generally described. An exemplary hand set **1048** includes an annular handset housing member **1142** and a button **1144** mounted to the housing **1142**. The button **1144** can be pressed to provide a signal to a switcher box (see **1084** in FIG. **33**). Referring still to FIG. **28**, on an undersurface of the housing **1142** opposite the button **1144**, a slip-resistant pad **1145** is adhered to, as the label implies, impede sliding of the handset **1048** when the undersurface **1145** is placed on a supporting work surface or the like. The slip resistant pad **1145** may be formed of plastic or rubber type material. In at least some embodiments each handset **1048** is constructed to be relatively heavy (e.g., on the order of one-half to two pounds and generally around one to one and one-half pounds) so that when the handset is pulled into a use position, the handset weight will generally retain the handset in the use position until affirmatively replaced in the well **1069**. Each of the cables **1050** has first and second ends **1146** and **1148**, respectively. The first end **1146** is linked to an associated handset **1048** while a connector jack **1150** is secured at the second end **1148**.

In at least some embodiments, referring also to FIG. **31**, in addition to including wires for transmitting select type signals from the handset **1142**, the cable **1050** will include a video cable **1210** and an audio cable **1212** that split off from other portions of the cable **1050** proximate the handset end thereof. As shown in FIG. **31**, a video jack **1214** and an audio jack **1216** are provided at distal ends of the cables **1210** and **1212**, respectively, for linkage to a laptop computer or the like. Although not shown, in at least some cases, video and audio cables will split off from the control cable at the end of cable **1050** opposite handset **1048** and jacks will be provided at that other end for linking to the switcher box **1084**. In still other embodiments, the audio and video cables may be replaced by digital transfer data cables such as USB cables or the like that can carry audio, video and other data types such as control signals from the handsets to the switcher device **1084**.

Referring yet again to FIG. **28**, door members **1025** and **1026** are substantially rectilinear, rigid and flat members, each of which includes a top surface and an oppositely facing bottom surface. Together, the door members **1035** and **1026** form a shape that is substantially similar to the shape of table top opening **1027**, albeit having slightly smaller width and length dimensions than opening **1027** to that, when the door members **1025** and **1026** are in a closed position as shown in FIG. **33**, gaps G exist between adjacent edges of the door members **1025** and **1026** and the edge that forms opening **1027**. The gaps G are sized such that cables **1050** can pass therethrough while the doors **1025** and **1026** are closed (see also FIG. **35** in this regard).

Referring yet again to FIG. **28**, the assembly also includes first and second hinge plates **1130** and **1132**. Each of the hinge plates **1130** and **1132** is similarly constructed and operates in a similar fashion and therefore, in the interest of simplifying this explanation, only hinge plate **1130** will be described here in detail. Plate **1130** is a rigid rectilinear and flat member that forms a top surface **1134**, a rear edge **1140** and a central rectilinear opening **1138**. A hinge member **1136** is integrally formed or attached to an undersurface of member **1130** adjacent rear edge **1140**. The hinge member **1136** is designed to cooperate with hinge members **1164** and hinge pins **1169** to secure plate **1130** to the top mounting surface **1162** of island **1154**.

To assemble deck assembly **1045**, screws (not illustrated) are used to mount bracket **1178** to an undersurface of deck member **1046** with the slots **1190** and **1192** aligned with openings **1158** formed by deck member **1046**. Next, door members **1025** and **1026** are secured to the top surfaces (e.g., **1134**) of hinge plates **1130** and **1132** via adhesive or some type of mechanical fastener. Pins **1069** are used to secure hinge members **1136** on plates **1130** and **1132** to hinge members **1164** on the top mounting surface **1162** so that door members **1025** and **1026** extend above separate halves of the deck top surface **1152**.

Referring now to FIGS. **27**, **28** and **33**, assembly continues as follows. One of the handsets/cable subassemblies is aligned with one of the handset cavities **1156** and the distal end **1148** of the handsets/cable subassembly is passed through the aligned cable passing opening **1158**.

Referring still to FIGS. **27**, **28** and **33**, the distal end **1148** of the cable **1050** is next looped around the pulley wheel (see **1118** in FIG. **26**) of one of the pulley/weight assemblies **1068** and is fed back to toward bracket **1178** and through an aligned one of the slots (e.g., **1190**) and into the cavity formed by bracket **1178**. The distal end **1148** of the cable **1050** is looped over the half-dome bar **1194** and is passed through and aligned exit port (e.g., **1198**). The distal end **1148** is pulled through the exit port until a portion (e.g., one foot) thereof extends down below bracket **1178**. Continuing, a zip strip or other mechanical fastener is used to fasten the portion of cable **1050** adjacent half-dome bar **1194** to bracket **1178** so that at least that portion of the cable **1050** is securely attached to the bracket **1178**. When the handset **1048** is received within the deck handset cavity **1156**, pulley/weight assembly **1068** hangs down below bracket **1178** as shown in FIG. **33**.

Continuing, referring still to FIGS. **27**, **28** and **33**, each of the handset/cable subassemblies **1048** and **1050** is aligned with a separate one of the handset cavities **1156**, the distal ends of the cables are passed through the deck openings **1158** and looped around separate ones of the pulley wheels **1118** and back up through one of the slots **1190** or **1192** into the bracket **1178** cavity and down through an associated one of the exit ports **1198** or **1200**. Again, zip strips or other mechanical fasteners are used to secure intermediate portions of each of the cables **1050** to bracket **1178**. Once each of the handsets/cable subassemblies has been secured to the deck **1046** and bracket **1178**, all of the pulley/weight assemblies **1068** should hang down below the bracket **1178** such that adjacent pulley/weight assemblies **1068** are arranged in a substantially parallel fashion.

Continuing, referring specifically to FIG. **24**, the subassembly including the deck assembly **1045**, door members **1025** and **1026** and pulley/weight assemblies **1068** can be aligned above the already assembled components of the retractor assembly **1052** with each of the pulley/weight assemblies **1068** aligned above a separate one of the channels **1124** (see also FIG. **27**). The deck assembly **1045** and other connecting components can be moved down toward assembly **1052** so that each of the pulley/weight assemblies **1068** slides down into one of the channels **1124** until an undersurface of deck member **1046** contacts mounting plates **1114** of the first and second sloped mounting brackets **1070** and **1072**, respectively (see also FIG. **26**). Screws or other mechanical fasteners are used to secure the mounting plates **1114** to the undersurface of deck member **1046**. At this point, the entire wire management assembly **1024** has been assembled.

Referring now to FIGS. **24** and **33**, to secure the wire management assembly **1024** to the leg support structure **1018**, wire management assembly **1024** is aligned above the table top opening **1027** and is slid down into channel **1082** until an undersurface of deck member **1046** contacts the top surface **1085** of top plate **1079**. Screws passing through deck member openings **1165** (see also FIG. **28**) are used to secure deck member **1046** to top surface **1085**. At this point, when door members **1025** and **1026** are in their closed positions as shown in FIG. **33**, top surfaces thereof should be substantially flush with the top surface **1021** of table top member **1020** and gaps G should exist between adjacent edges of door members **1025** and **1026** and the edge forming opening **1027**. Switcher device or control box **1084** is mounted via a bracket **1098** (see also FIG. **25**) between two of the vertical leg members **1076**. Distal ends **1148** of the cables **1050** are linked to separate ports of the switcher device **1084**. Here, where one of the cables **1050** includes a control line in addition to audio and video cables, each of the control line and audio and video cables may be linked to separate ports on the switcher device **1084**, albeit the video and audio and control ports being associated by the switcher device **1084**.

Referring to FIG. **25**, an output audio/video cable **1099** is linked to an output port of the switcher device **1084** at one end and to display **1036** and, possibly, speakers or the like, at an opposite end.

Referring now to FIGS. **20**, **25** and **36**, the totem/display assembly **1014** includes a totem **1028** and a display screen **1036**. Totem **1035** includes structural and exterior housing members, as the label implies, form an elongated vertical or upright totem having a bottom end **1032** and a top end **1034** that forms a front surface **1035**. More specifically, totem assembly **1028** includes a vertical internal structural beam **1226**, a front housing cover **1222**, a rear housing cover **1224** and a display mounting plate **1228**. Beam **1226** is an elongated rigid beam having top and bottom ends **1234** and **1236**, respectively, and forms a front surface **1232**. Surface **1232** forms four apertures **1230** used to secure a structural bridge member (see **1078** in FIG. **37**) to beam **1226**.

Plate **1228** is a rigid flat and rectilinear member mounted to front surface **1232** via welding or mechanical fasteners proximate top end **1234**.

Cover **1226** is a flat, rigid and substantially rectilinear member that forms an opening **1238** for passing one end of bridge structural member **1278**. Cover **1224** is generally an elongated C-shape in cross-section and includes flanges along long edges thereof for securing front cover **1222**. Covers **1222** and **1224** mount to beam **1228** via mechanical fasteners (not shown) to form the totem **1028** and form an internal cavity **1240** when assembled. Display **1036** mounts to plate **1234**. Display screen **1036** includes a housing structure and a display front surface **1038**. In at least some embodiments, the totem/display assembly **1014** cannot stand in an upright position alone.

Referring still to FIG. **25** and also to FIG. **37**, bridge assembly **1016** includes a rigid elongated support member **1078** that is mechanically fastened via screws or the like or is welded to the vertical leg members **1076** of leg support structure **1018** at one end and to the internal vertical structure beam **1226** of totem assembly **1028** at the opposite end. In the illustrated embodiment, beam **1078** includes first and second mounting plates **1095** at opposite ends for securing to the leg assembly **1018** and the totem structural beam **1226**. In at least some embodiments, member **1078** is a metallic beam type member. Through member **1078**, the table leg structure **1018** provides additional support to totem assembly **1028**.

A cable trough forming bridge housing includes a top housing member **1086**, a bottom housing member **1092**, first and second end shoes **1088** and **1090**, respectively, two side plates **1094** and a U-shaped bracket **1093**. The top and bottom housing members **1086** and **1092** extend between the leg structure **1018** and totem assembly **1028** above and below beam member **1078** and form a bridge channel **1096** there between (see phantom in FIG. **25**). The end shoes **1090** and **1088** abut against the leg structure **1018** and the front surface **1035** of totem assembly **1028** and provide a finished look. U-shaped bracket **1093** mounts to bridge beam **1078** via screws or other mechanical fasteners and extends down therefrom. Bracket **1093** operates as a cable manager and also as a structure to which housing member **1092** can be connected. The bridge cover member **1094** can be mechanically or otherwise fastened to the top and bottom housing members **1086** and **1092** to close off the bridge channel **1096**. In at least some embodiments, the cover members

1094 can easily be removed to access channel 1096 for laying cables therein or routing cable when appropriate.

Referring now to FIG. 33, operation of the retractor assembly 1052 will be described in the context of the illustrated system that includes only a single handset/cable subassembly in the interest of simplifying this explanation. When handset 1048 is not in use, handset 1048 can be received within an associated handset cavity 1156 (see also FIG. 32) which allows the pulley/weight assembly 1068 to slide down in its associated channel 1124 toward the bottom end of the retractor assembly 1052. When a conference attendee wishes to use one of the handsets 1048, referring also to FIG. 34, the attendee can rotate door member 1026 on its hinge to an open position, grasp the handset 1048 and pull the handset out from within the cavity formed below the door member 1026. As the handset 1048 is pulled up and out of the cavity, pulley/weight assembly 1068 slides upward within the channel 1124.

Referring now to FIG. 35, the attendee can place the handset 1048 with its undersurface on top surface 1021 of tabletop member 1020. The attendee can close door 1026. The nonslip undersurface of handset 1048 and the weight of the handset 1048 cooperate to retain the handset 1048 on the top surface 1021 despite the weight of the pulley/weight assembly 1068. Nevertheless, pulley/weight assembly 1068 maintains the portion of the cable 1050 above the top surface 1021 taught. Continuing, where the cable 1050 includes audio and video cables (see FIG. 31), the attendee can link those cables to the attendee's laptop and, when appropriate, select the handset button to take control of information presented via the display screen 1036.

After a conference has been completed, attendees can unlink their laptops from the cables 1050 and replace their handsets 1048 within the cavity or well 1069 below doors 1025 and 1026. To this end, referring once again to FIGS. 34 and 35, an attendee can open door 1026 and lift the attendee's handset 1048 from top surface 1021. As the attendee moves the handset 1048 toward well 1069 below door member 1026, the pulley/weight assembly 1068 moves down within cavity 1124 thereby aiding the attendee in replacing the handset in the stowed position. Referring to FIG. 33, eventually the handset 1048 is placed back in the associated handset cavity 1156 in its stowed position.

While one embodiment has been described above, it should be appreciated that the concepts described above may be applicable in many different embodiments. For example, the exemplary wire management assembly and totem and bridge concepts may be used with tabletop members that have other shapes such as, for instance, oval, round, etc. In addition, all of the concepts described above may be used with table assemblies that do not include a footrail or additional supporting foot members or with leg support structures that have different height dimensions than those illustrated. Moreover, while the embodiment that is described above includes six separate handsets, it should be appreciated that other embodiments are contemplated that may include more or less handsets such as, for instance, embodiments that include four handsets, eight handsets, etc.

Moreover, other embodiments are contemplated that may include two or more wire management assemblies 1024 and associated leg support structures 1018 for supporting larger tabletop members. Furthermore, other embodiments are contemplated that may include a switcher device linked to two or more display screens or that include wall mounted or cart mounted display screens that can be positioned independent of other table assembly components. To this end, see FIG. 37 that shows a two leg table assembly including first and second totem/display assemblies 1014 and 1014*b*, respectively, two leg structures 1018*a* and 1018*b*, respectively, a single table top 1020', a single foot rail 1022', first and second wire management assemblies 1024*a* and 1024*b*, respectively, and first and second bridge assemblies 1016*a* and 1016*b*, respectively. Here, it may be that only one switcher device is provided or, in some cases where two devices are provided, the devices may be linked so that simultaneous control of the display screens results. In some cases one attendee may control one display while another attendee controls the second display screen.

Referring to FIG. 38, in some cases a handset 1048' may include a housing 1142*a*, 1 button 1144*a* and one or more LEDs 1300. In the illustrated embodiment, the housing 1142*a* may be formed of a transparent or semitransparent material (e.g., Plexiglas) so that when the LEDs are illuminated, light shines through the housing. In at least some cases LEDs may be illuminated when a laptop associated with a specific handset is selected to control the displays. In some cases a handset may have several different colors of LEDs to indicate different statuses. For instance, when no laptop is linked and associated with a handset, no LEDs may be illuminated in the handset. Once a handset is linked to a laptop and when the linked laptop is not driving the display, a red LED may be illuminated. When a laptop is currently driving the display, a green LED may be illuminated.

In addition, while the illustrated embodiment shows a retractor assembly 1052 for use with switcher control cables and audio/video cables, it should be appreciated that such a retractor assembly may be used for other types of cable such as power, data and communication cables. Moreover, referring to FIG. 33, in at least some embodiments, intermediate connectors (not illustrated) may be provided on bracket 1178 and cable 1050 may terminate at the intermediate connectors. Here, separate cables would link the intermediate connectors to selector 1084.

Furthermore, other weight types may be employed instead of the pulley/weight assemblies 1068. For instance, a simple weight may be fastened to a portion of cable 1050 to tend to pull the handsets 1048 toward well 1069.

Referring now to FIG. 40, yet one other exemplary conferencing table configuration or assembly 1301 is illustrated that includes a table assembly 1302, a totem/display assembly 1304 and a bridge assembly 1312. Table assembly 1302 includes a leg support structure 1316, a table top member 1314 and a wire management assembly 1320. Referring also to FIGS. 41 through 43, leg support structure 1316 includes a vertical leg sub-assembly 1318 and horizontal foot members and a rail member which are not separately labeled. Vertical leg sub-assembly 1318 supports a central portion of table top member 1314 at a top end thereof.

Referring to FIGS. 40 and 41, the wire management assembly 1320 includes a housing structure 1350 at the top end of sub-assembly 1318 that, as the label implies, houses a sub-set of the components that comprise the wire management assembly 1320. In FIG. 42, an outside cover of sub-assembly 1318 has been removed as well as the housing structure 1350 to show that portions of assembly 1320 reside within the housing structure 1350 as well as extend down into a channel formed by sub-assembly 1318.

Referring once again to FIG. 40, table top member 1314 forms a central opening for receiving a sub-set of the wire management assembly components as will be described in greater detail below. Referring to FIG. 43, bridge assembly 1312 in this embodiment includes a simple bracket that secures an undersurface of table top member 1314 to totem

1304. Here, video and, in at least some case, audio cables, may pass from within housing 1350 to totem 1304 adjacent the bridge bracket 1312 for linkage to display screens. In addition, power may be provided to the components within housing 1350 via a cable running up through totem 1306 and adjacent or under the bracket that forms bridge 1312 into the housing 1350. In still other cases, foot members 1315 (only one of two shown) secure a bottom of totem 1306 to foot structure that forms the understructure of table assembly 1302. Here, in at least some embodiments, power and data cables may run through members 1315 to components within housing 1350.

Referring yet again to FIGS. 40 through 43, totem 1304 includes a generally vertical structure 1306 that supports first and second flat panel video display screens 1308 and 1310, respectively. Here, the two screens may enable separate table users to control content simultaneously, a different user controlling each one of display screens 1308 and 1310. In other embodiments, a large single display screen may be provided as described above with respect to other embodiments where the display screen may be split into two or more separate regions where the content in each of the regions can be controlled by a different one of a plurality of table users via a user unique handset.

Referring now to FIG. 44, an exemplary wire management assembly 1320 is illustrated which includes a plurality of housing component as well as power and data cables, a power brick, an Ethernet switching component, a video player, a plurality of power and data receptacles, six handsets, one identified by numeral 1326, and pulley-type weights, two of which are collectively identified by numeral 1332. Assembly 1320 is similar to assembly 1052 described above with a few differences. With respect to differences between the assemblies, referring to FIGS. 44 through 47, it should be appreciated that a handset receiving housing 1336 that mounts to an undersurface of the table top 1314 (see again FIG. 40) below the central opening forms a recess 1330 in which an island forming member 1324 is centrally mounted (see specifically FIG. 45). Generally vertical or angled surfaces formed by member 1336 and the island forming member 1324 form power and data receptacle receiving openings 1332 and 1334, respectively. Here, a top surface of the island forming member 1324 resides below an undersurface of top member 1314 and forms a space between island forming member 1324 and the plane formed by the table top member 1314 in which the handsets 1326 can generally reside. Thus, in this embodiment, the handsets are positioned relatively higher within the recess 1330 than in the previous embodiment described above.

Referring now to FIG. 46, audio/video cable extension modules 1360 are shown with a separate module 1360 connected via a cable 1369 to each one of the handsets 1326. Thus, here, module 1360 can be used to link to a computer used by a user and can thereby be readily associated with one of the handsets 1326 linked thereto. Computers can be linked to the power and data outlets that reside in openings 1332 and 1334, respectively, as shown in FIG. 45. In other contemplated embodiments power, data, audio and video may be supported by each of modules 1360.

Referring still to FIGS. 44 through 46 and also to FIG. 47, another difference between the embodiment shown in FIGS. 40 through 47 and the embodiments described above is that cables from the handsets 1326 extend down through island forming member 1324 (see again FIG. 45), wrap around an associated weight 1332 and then extend back up toward the undersurface of member 1336 so that the weight 1332 associated with a handset resides below the handset when the handset is in the stored position. Here, see openings 1336 formed in the top surface of island member 1324 for passing handset cable. See specifically FIG. 47 where a cable 1351 extends down from handset 1326, wrap around an associated weight 1332 and then extends back up as indicated at 1351 to under the associated handset 1326 and terminates at 1354. This design results in a more compact wire management structure, operates better than the designs described above and locates the handsets 1326 in a more easily accessible position.

Referring now to FIGS. 45 and 47, in at least some embodiments of the present invention it is contemplated that the top surface of the island forming member 1326 may be fitted with flat tacky plastic or magnetic members 1338 where the handsets 1326 have complementary flat surfaces 1362 (see FIG. 47). Here, when a handset 1326 is placed on one of members 1338, the handset 1326 will generally be captured thereby unless affirmatively removed by a table user. When a handset 1326 is in the stored position as shown in FIGS. 44, 46 and 47, the power and data modules 1360 reside within a lower portion of the recess 1330 formed by housing 1336. Thus, both the handset 1326 and the power/data module are located in easily accessible storage positions when stowed. In still other embodiments parts 1338 of the top surface of the island deck 1324 may be raised or recessed and complimentary recesses or raised portions may be provided on the undersurfaces of the hand sets 1326 so that when a handset 1326 is placed on the deck, the raised portion and the recess cooperate to effectively hold the handset in the stored position unless affirmatively removed by a user.

Several specific embodiments of the present invention have been described above. It should be appreciated that in the development of any such actual implementation, as in any engineering or design project, numerous implementation-specific decisions must be made to achieve the developers' specific goals, such as compliance with system-related and business related constraints, which may vary from one implementation to another. Moreover, it should be appreciated that such a development effort might be complex and time consuming, but would nevertheless be a routine undertaking of design, fabrication, and manufacture for those of ordinary skill having the benefit of this disclosure.

For example, while the pucks 48 described above include illumination devices controllable to indicate different states, it should be appreciated that other indicators that can visually distinguish states are contemplated. For instance, each button 60 *a*-60 *d* in FIG. 4 may include a liquid crystal display type device where different cross hatching indicates different statuses. As another example, in at least some embodiments it is contemplated that each time a presentation state changes, a puck or other system component may generate an audible signal to indicate a state change (see audio generator 77 in FIG. 5). In addition, while the embodiments illustrated include two or four displays supported by a totem, it should be appreciated that the illustrated embodiments are only exemplary and that other numbers of displays may be supported by a totem or that displays may in some cases be mounted to a wall or other supporting structure proximate a conferencing table.

Thus, the invention is to cover all modifications, equivalents, and alternatives falling within the spirit and scope of the invention as defined by the following appended claims.

What is claimed is:

1. An assembly for sharing content from video source devices, the apparatus comprising:

a table assembly having a top member and a table support structure for supporting the top member in a substantially horizontal orientation, the top member forming a top surface and an opening in the top surface;

a display assembly including at least a first display screen generally residing at a height above the height of the top surface of the table top;

a switching device linked to the display assembly for providing content thereto to be presented via the first display screen;

a plurality of control interfaces attached to the table assembly and linked to the switching device, each control interface including at least a first selectable control;

wherein, a video source device is associated with one of the control interfaces by linking the source device to the control interface;

wherein, when a first source device is linked to a first control interface, selection of the first selectable control on the first control interface causes the switching device to provide video information to replicate the content from the display screen of the first source device on the first display screen; and

wherein, when a second source device is linked to a second control interface, selection of the first selectable control on the second control interface causes the switching device to provide video information to replicate the content from the display screen of the second source device on the first display screen.

2. The assembly of claim 1 wherein each of the first selectable controls includes an indicator capable of indicating at least first and second states, the first state indicating that no source is linked to a control interface that includes the indicator and the second state indicating that a source is linked to the control interface that includes the indicator.

3. The assembly of claim 2 wherein the indicator is a light device.

4. The assembly of claim 3 wherein each control interface indicates the second state by illuminating the light device and indicates the first state by turning off the light device.

5. The assembly of claim 4 wherein each interface also includes a speaker.

6. The assembly of claim 2 wherein the second state indicates that a source is linked to the control interface that includes the indicator but that the source content is not replicated on the first display screen, each indicator also capable of indicating a third state when a source is linked to the control interface that includes the indicator and the source content is replicated on the first display screen.

7. The assembly of claim 1 wherein the plurality of control interfaces includes at least four control interfaces.

8. The assembly of claim 1 wherein each control interface is connected to the switching device via a control cable.

9. A method for use with source devices that include display screens and that present content on the display screens, the method for selecting displayed content from source devices to be replicated on at least a first common display screen in a collaborative workspace, the method comprising the steps of:

providing a control assembly that includes:

(i) a first control interface including at least a first interface first control button associated with the at least a first common display screen, the first interface first control button including a first interface first indicator capable of indicating first and second different states;

(ii) a second control interface including at least a second interface first control button associated with the at least a first common display screen, the second interface first control button including a second interface first indicator capable of indicating first and second different states;

upon linking a first source device to the first control interface and while the content on the display screen of the first source device is not replicated on the first common display screen, causing the first interface first indicator to indicate the first state;

when the first interface first control button is selected, replicating the content from the first source device linked to the first control interface on the at least a first common display screen;

upon linking a second source device to the second control interface and while the content on the display screen of the second source device is not replicated on the first common display screen, causing the second interface first indicator to indicate the first state; and

when the second interface first control button is selected, replicating the content from the second source device linked to the second control interface on the at least a first common display screen.

10. The method of claim 9 further including the steps of, prior to linking the first source device to the first control interface, causing the first interface first indicator to indicate the second state and prior to linking the second source device to the second control interface, causing the second interface first indicator to indicate the second state.

11. The method of claim 10 wherein each of the indicators is further capable of indicating a third state, the method further including the steps of, with the first source device linked to the first control interface and while the content on the display screen of the first source device is replicated on the first common display screen, causing the first interface first indicator to indicate the third state and, with the second source device linked to the second control interface and while the content on the display screen of the second source device is replicated on the first common display screen, causing the second interface first indicator to indicate the third state.

12. The method of claim 9 further including the steps of, with the first source device linked to the first control interface and while the content on the display screen of the first source device is replicated on the first common display screen, causing the first interface first indicator to indicate the second state and, with the second source device linked to the second control interface and while the content on the display screen of the second source device is replicated on the first common display screen, causing the second interface first indicator to indicate the second state.

13. The method of claim 10 wherein each indicator includes a light device.

14. The method of claim 12 wherein each indicator includes a light device.

15. The method of claim 9 further including providing a table structure wherein each of the control interfaces is secured to the table structure.

16. The method of claim 9 wherein, when a control button is selected on any of the control interfaces while the control interface is linked to a source device, the content from the display screen of the linked source device is used to replace current content on the common display screen irrespective

of whether or not content from another source device is being presented via the common display screen when the control button is selected.

17. The method of claim **9** wherein the first control interface is separate from the second control interface.

18. The method of claim **17** wherein each control interface also includes an audible sound generator device.

19. An assembly for sharing content from video source devices on at least a first common display screen, the apparatus comprising:

a switching device linked to the display assembly for providing content thereto to be presented via the first common display screen;

a plurality of control interfaces attached to the table assembly and linked to the switching device, each control interface including at least a first selectable control, a connector for connecting to a video source device and at least one indicator;

wherein, a video source device is associated with one of the control interfaces by linking the source device to the control interface;

wherein, when a first source device is linked to a first control interface, selection of the first selectable control on the first control interface causes the switching device to provide video information to replicate the content from the display screen of the first source device on the first display screen and causes the indicator on the first control interface to indicate that the content from the display screen of the first source device is replicated on the first common display screen; and

wherein, when a second source device is linked to a second control interface, selection of the first selectable control on the second control interface causes the switching device to provide video information to replicate the content from the display screen of the second source device on the first display screen and causes the indicator on the second control interface to indicate that the content from the display screen of the second source device is replicated on the first common display screen.

20. The assembly of claim **19** wherein each indicator includes a light device.

21. The assembly of claim **19** wherein each indicator includes a sound generating device.

22. The assembly of claim **1** further including a separate control cable for each of the control interfaces, each control cable including first and second ends, the first end of each cable linked to the switching device and the second end of each cable connectable to a source device to link the source device to an associated control interface, each control interface linked to an associated control cable somewhere along a length of the control cable between the first and second ends.

23. The assembly of claim **22** wherein each first selectable control includes a first control button.

24. The assembly of claim **23** wherein the first display screen includes at least first and second different presentation spaces and wherein selection of a first control button causes replication of content from a source device linked to an associated control interface within the first presentation space and, wherein, each control interface further includes at least a second control button selectable to cause replication of content from a source device linked to an associated control interface within the second presentation space.

25. The assembly of claim **24** wherein the first display screen includes at least third and fourth different presentation spaces and wherein, each control interface further includes third and fourth control buttons selectable to cause replication of content from a source device linked to an associated control interface within the third and fourth presentation spaces, respectively.

26. The assembly of claim **22** wherein each control cable is moveable though the table top opening into a storage position in which the entire control cable and associated control interface are located at a height below the table top and into a use position in which the second end of the cable and the associated control interface are pulled up through the table top opening so that the control interface is accessible above the table top surface.

27. The assembly of claim **26** wherein each control interface further includes an illumination device that lights up to indicate when content from a source device linked to the control interface is replicated on the first common display screen.

28. The assembly of claim **27** further including a retractor assembly for each of the control cables, each retractor assembly supported below the table top member and engaging one of the control cables and at least periodically applying a force to the engaged control cable tending to pull the cable through the table top opening and into the storage position.

29. The assembly of claim **28** wherein each control interface is closer to the second end of an associated control cable than to the first end of the associated control cable.

30. The assembly of claim **29** wherein the each illumination device is visible above the top surface of the table top when an associated cable is pulled into the use position.

31. The assembly of claim **28** further including a deck member mounted to the table top below the table top opening wherein the deck member restricts downward movement of the control cables so that the second ends of the control cables remain proximate and below the table top opening when the control cables are in the storage positions.

32. The assembly of claim **31** wherein the deck member restricts downward movement of the control cables so that the control interfaces also remain proximate and below the table top opening when the control cables are in the storage positions.

33. The assembly of claim **32** wherein the deck member forms at least one opening and wherein a section of at least one of the control cables between the control interface and the first end passes through the at least one opening in the deck member.

34. The assembly of claim **33** wherein the sections of each of the control cables between the control interfaces and the first ends pass through the at least one opening in the deck member.

35. The assembly of claim **34** wherein the deck member forms a separate opening for each of the control cables and wherein the section of each control cable between the control interface and the first end passes through a separate one of the openings formed by the deck member.

36. The assembly of claim **35** wherein the retractor assemblies are supported below the deck member.

37. The assembly of claim **36** wherein each retractor assembly includes a pulley that engages an associated control cable.

38. The method of claim **9** for use with a switching device that includes at least a first output linked to the first display screen and first and second inputs associated with the first and second control interfaces, respectively, a source device linked to the first control interface by linking the source

device to the first input and a source device linked to the second control interface by linking the source device to the second input.

* * * * *