US009120682B2

(12) **United States Patent**
Lawrence et al.

(10) **Patent No.: US 9,120,682 B2**
(45) **Date of Patent: Sep. 1, 2015**

(54) **METHOD AND APPARATUS FOR GENERATING MERCURY (II) SULFIDE FROM ELEMENTAL MERCURY**

(71) Applicant: **BETHLEHEM APPARATUS COMPANY, INC.**, Hellertown, PA (US)

(72) Inventors: **Bruce J. Lawrence**, Hellertown, PA (US); **Scott A. Schreffler**, Bethlehem, PA (US)

(73) Assignee: **BETHLEHEM APPARATUS COMPANY, INC.**, Hellertown, PA (US)

(*) Notice: Subject to any disclaimer, the term of this patent is extended or adjusted under 35 U.S.C. 154(b) by 0 days.

(21) Appl. No.: **14/314,982**

(22) Filed: **Jun. 25, 2014**

(65) **Prior Publication Data**

US 2014/0377163 A1 Dec. 25, 2014

Related U.S. Application Data

(60) Provisional application No. 61/839,245, filed on Jun. 25, 2013.

(51) **Int. Cl.**
C01G 13/00 (2006.01)
A62D 3/30 (2007.01)

(52) **U.S. Cl.**
CPC ***C01G 13/00*** (2013.01)

(58) **Field of Classification Search**
CPC C01G 13/00; A62D 3/30; A62D 2101/00
See application file for complete search history.

(56) **References Cited**

U.S. PATENT DOCUMENTS

5,268,152	A	12/1993	Delzer et al.	
5,298,227	A	3/1994	Hirth et al.	
6,053,187	A	4/2000	Altomonte	
6,156,281	A	12/2000	Akers et al.	
6,399,849	B1	6/2002	Kalb et al.	
6,403,044	B1	6/2002	Litz et al.	
6,579,507	B2	6/2003	Pahlman et al.	
7,060,233	B1	6/2006	Srinivas et al.	
7,691,361	B1 *	4/2010	Boyle et al.	423/566.1
7,914,757	B1 *	3/2011	Bonmann	423/210
2004/0219083	A1	11/2004	Schofield	
2005/0089437	A1	4/2005	Kano et al.	
2007/0180802	A1	8/2007	Parker et al.	
2008/0019900	A1	1/2008	Riviere-Huc et al.	

OTHER PUBLICATIONS

International Search Report and Written Opinion for corresponding International Application No. PCT/US08/80642, dated Dec. 24, 2008, pp. 1-11.

Science Applications International Corporation Engineering and Environmental Management Group, "Technical Background Document: Mercury Wastes Evaluation of Treatment of Bulk Elemental Mercury Final Report", dated Aug. 2, 2002, 379 Pages, Reston, Virginia, United States.

* cited by examiner

Primary Examiner — Timothy Vanoy
(74) *Attorney, Agent, or Firm* — Ditthavong & Steiner, P.C.

(57) **ABSTRACT**

An approach is provided for generating red mercury (II) sulfide from elemental mercury. Elemental mercury is combined with sulfur and heated until vaporized. At least a portion of the elemental mercury reacts with the vaporized sulfur to form the mercury (II) sulfide. Un-reacted elemental mercury is drawn off and condensed by a condenser.

20 Claims, 4 Drawing Sheets

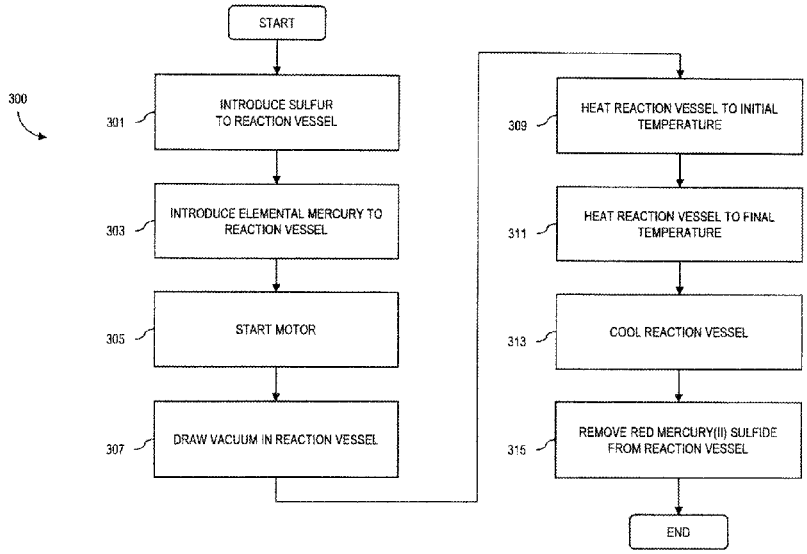

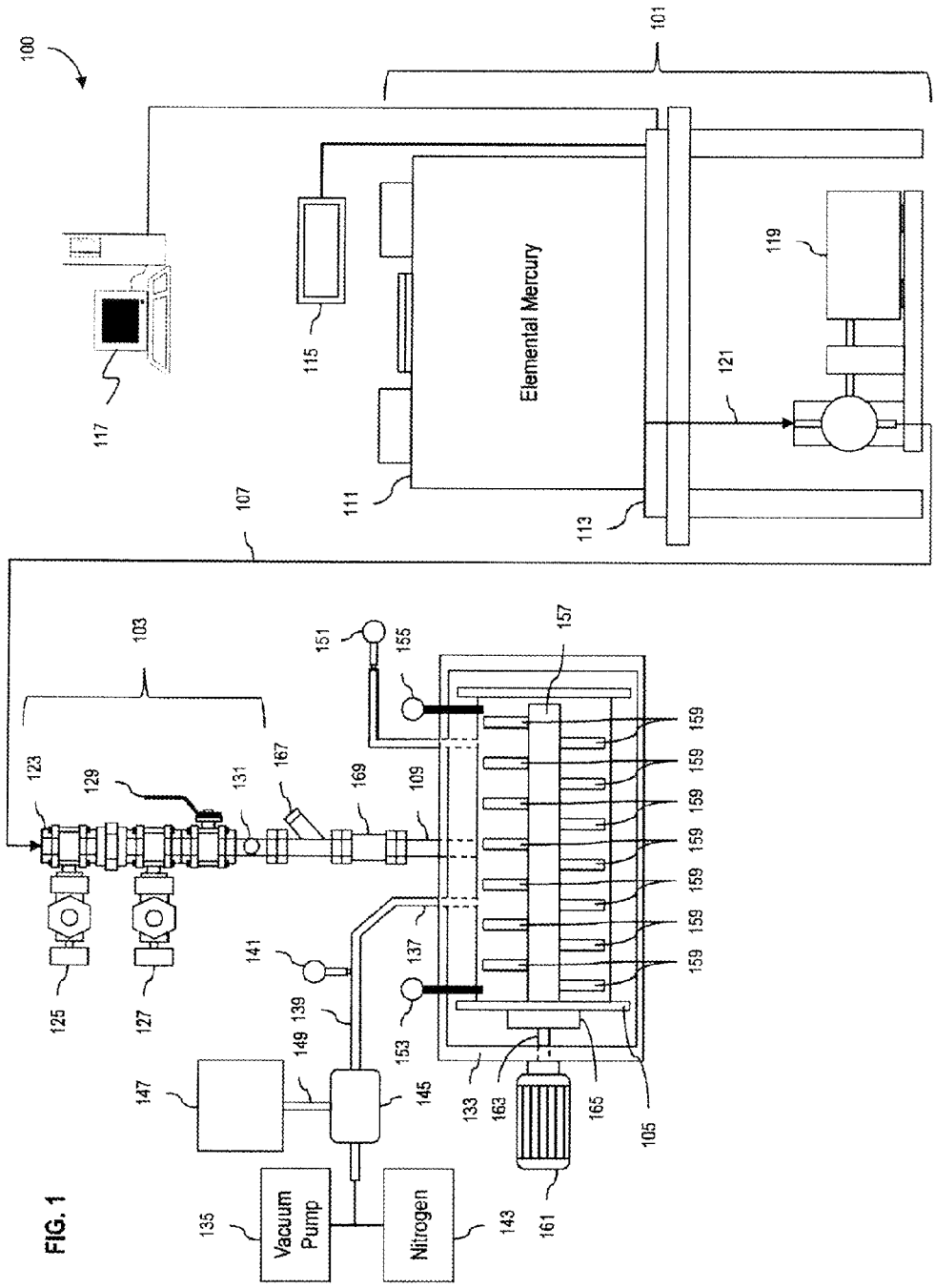
100
101
Elemental Mercury
Vacuum Pump
Nitrogen
103
105
107
109
111
113
115
117
119
121
123
125
127
129
131
133
135
137
139
141
143
145
147
149
151
153
155
157
159
161
163
165
167
169

FIG. 1

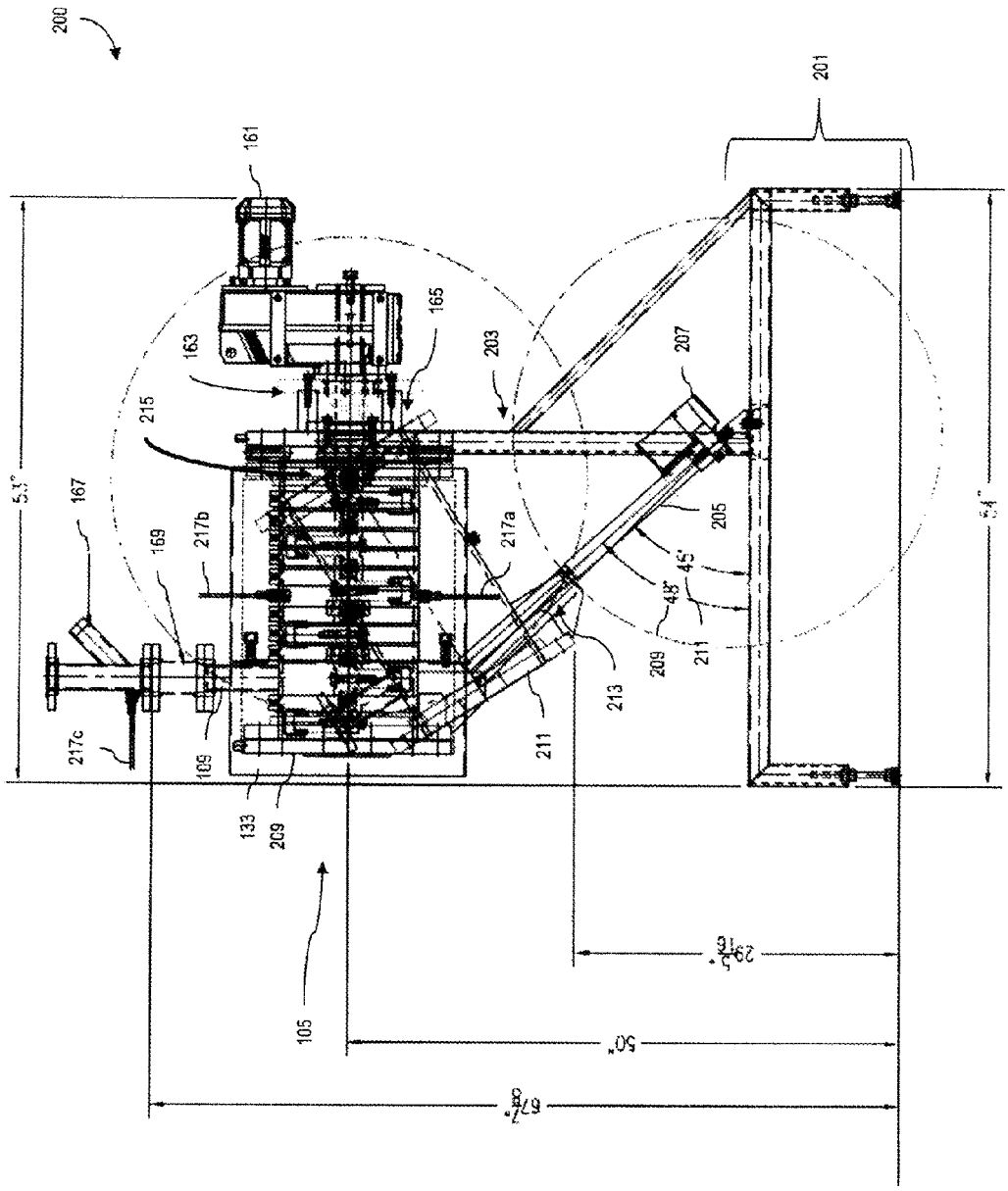
200
201
161
165
163
203
207
215
167
169
217b
217a
205
45°
48°
209
211
213
217c
109
133
209
105
50"

FIG. 2

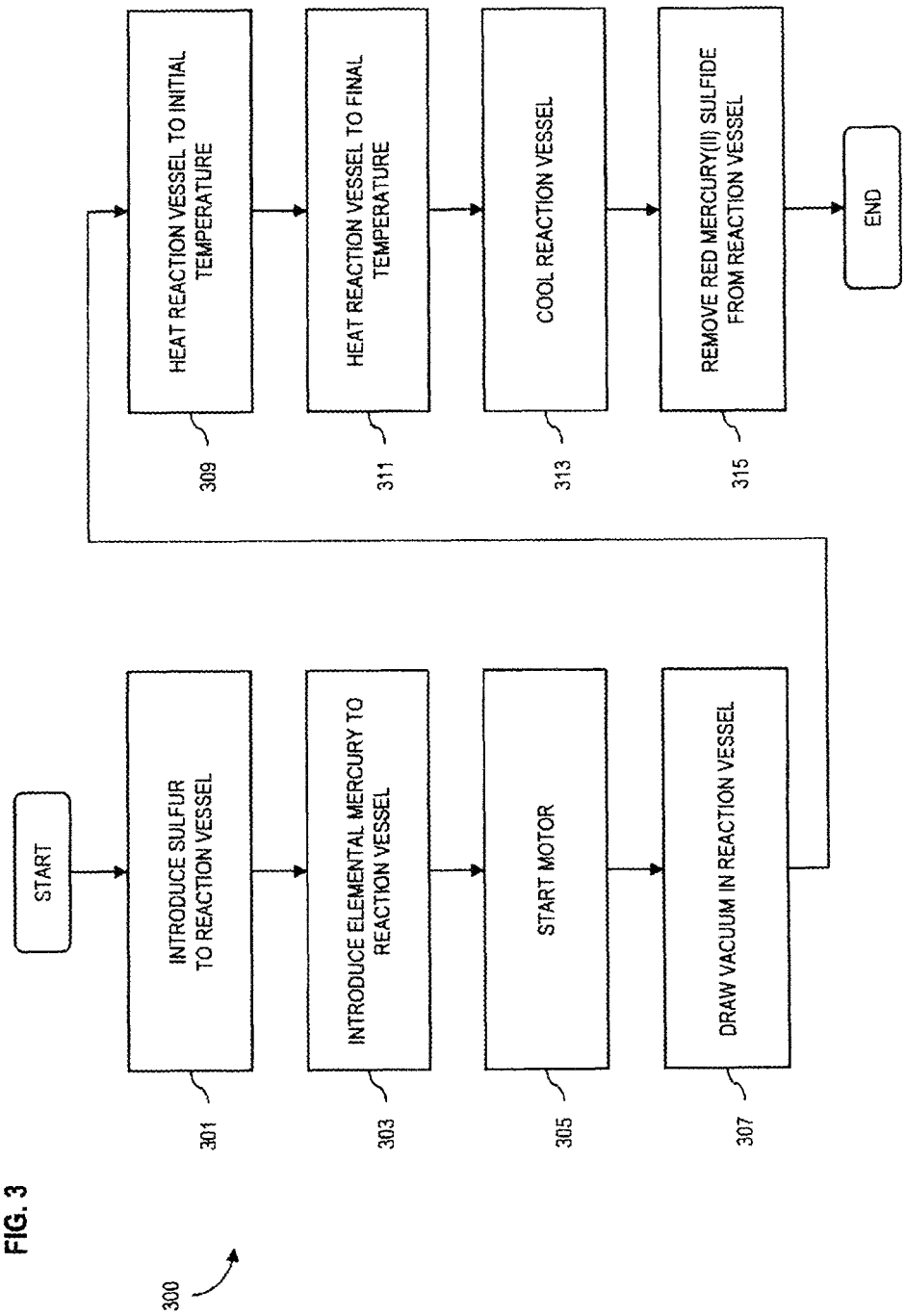
START
INTRODUCE SULFUR TO REACTION VESSEL
301
INTRODUCE ELEMENTAL MERCURY TO REACTION VESSEL
303
START MOTOR
305
DRAW VACUUM IN REACTION VESSEL
307
HEAT REACTION VESSEL TO INITIAL TEMPERATURE
309
HEAT REACTION VESSEL TO FINAL TEMPERATURE
311
COOL REACTION VESSEL
313
REMOVE RED MERCURY(II) SULFIDE FROM REACTION VESSEL
315
END
300

FIG. 3

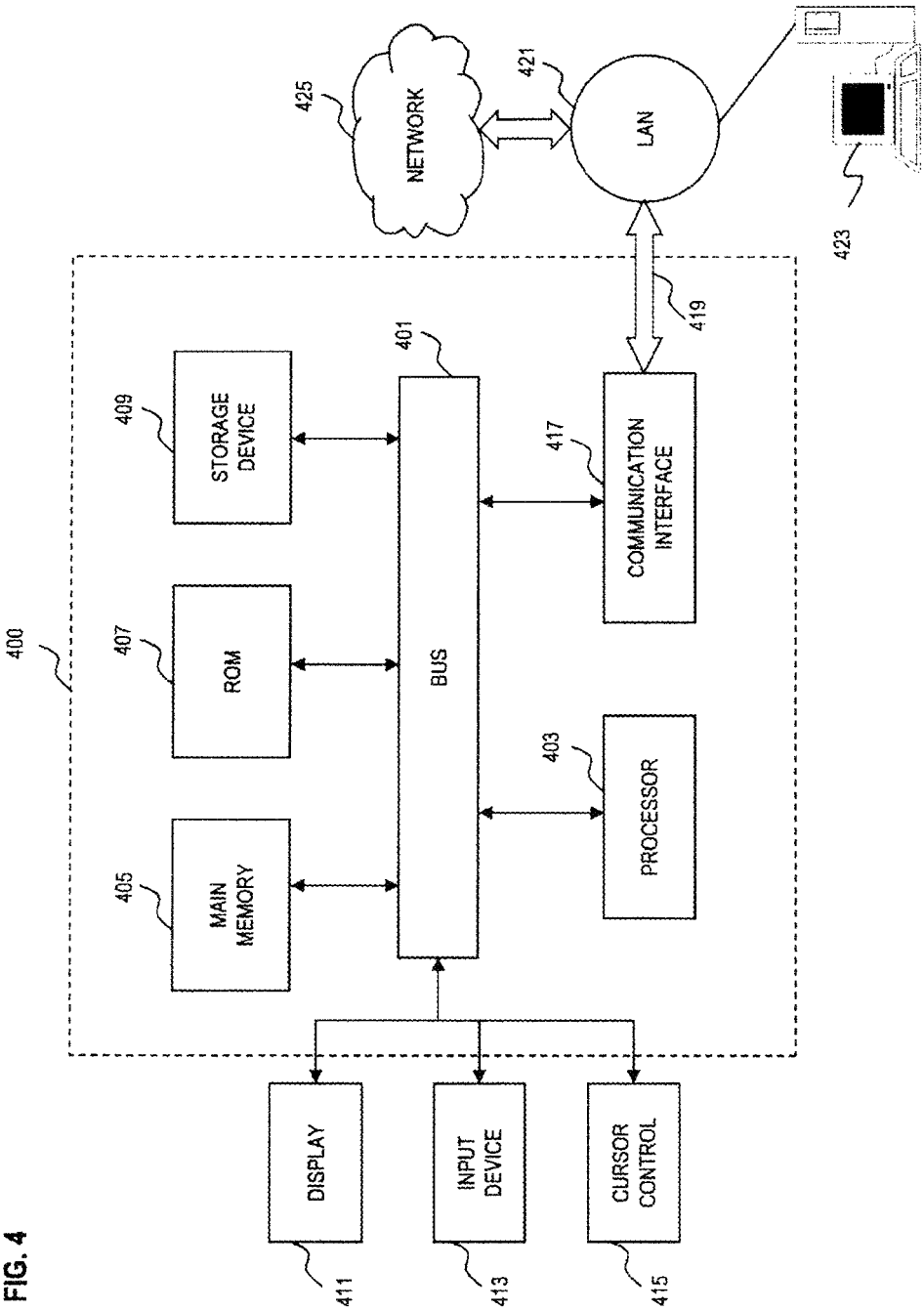
400
MAIN MEMORY
405
ROM
407
STORAGE DEVICE
409
BUS
401
PROCESSOR
403
COMMUNICATION INTERFACE
417
419
LAN
421
NETWORK
425
423
DISPLAY
411
INPUT DEVICE
413
CURSOR CONTROL
415

FIG. 4

METHOD AND APPARATUS FOR GENERATING MERCURY (II) SULFIDE FROM ELEMENTAL MERCURY

RELATED APPLICATION

This application claims the benefit of the earlier filing date under 35 U.S.C. §119(e) of U.S. Provisional Application Ser. No. 61/839,245 filed on Jun. 25, 2013, entitled "Method and Apparatus for Generating Mercury (II) Sulfide from Elemental Mercury," the entirety of which is incorporated herein by reference.

BACKGROUND OF THE INVENTION

The international community has imposed an increasing number of restrictions on the movement and commercial uses of mercury. For instance, some countries have adopted or are experimenting with adopting complete bans on the export of elemental mercury. Once adopted, a mercury ban is likely to have the effect of increasing the supply of elemental mercury beyond the demand for the substance within the affected region. As a result, countries adopting an export ban on elemental mercury could see growing surpluses of mercury.

As noted by the European Union and the United States during debates over their respective mercury regulations, a surplus of elemental mercury is particularly problematic because there is currently no viable long-term storage or disposal technique for elemental mercury. As such, surplus mercury is most commonly stored in its elemental form in iron flasks. These iron flasks are then warehoused and monitored to ensure their ongoing integrity. The long-term strength and durability of these iron flasks is, at least, debatable and, therefore, great concern over potential environmental hazards exists. In response, both the European Union and the United States have cited a need for the development of new technologies capable of converting elemental mercury into solid mercury compounds that are suitable for long-term storage and disposal.

Even in the absence of a mercury ban, some generators of elemental mercury would like to avoid being forced to sell their surplus mercury on the world market. Currently, the law in many jurisdictions (e.g., the United States) requires that all mercury must be sold or recycled. This requirement forces mercury generators to sell their mercury to avoid having to store the mercury indefinitely. The development of a viable mercury treatment option could give mercury generators an alternative to selling their mercury.

Therefore, there is a need for an approach capable of generating a stable solid compound of elemental mercury. A particular need exists for reaction processes capable of minimizing or eliminating the presence of elemental mercury residuals in the resulting mercury compound.

BRIEF DESCRIPTION OF THE DRAWINGS

Various exemplary embodiments are illustrated by way of example, and not by way of limitation, in the figures of the accompanying drawings in which like reference numerals refer to similar elements and in which:

FIG. **1** is a schematic diagram of a system for generating mercury (II) sulfide from elemental mercury, according to an exemplary embodiment;

FIG. **2** is a detailed schematic diagram of a reaction vessel system, according to an exemplary embodiment;

FIG. **3** is a flowchart of a process for generating mercury (II) sulfide from elemental mercury, according to an exemplary embodiment; and

FIG. **4** is a diagram of a computer system that can be used to implement various exemplary embodiments of the process control system.

DESCRIPTION OF THE PREFERRED EMBODIMENT

A preferred method and apparatus for generating mercury (II) sulfide from elemental mercury are described. In the following description, for the purposes of explanation, numerous specific details are set forth in order to provide a thorough understanding of the preferred embodiments of the invention. It is apparent, however, that the preferred embodiments may be practiced without these specific details or with an equivalent arrangement. In other instances, well-known structures and devices are shown in block diagram form in order to avoid unnecessarily obscuring the preferred embodiments of the invention.

FIG. **1** is a schematic diagram of a system **100** for generating mercury (II) sulfide from elemental mercury, according to an exemplary embodiment. In this example, system **100** includes elemental mercury source **101**, valve system **103**, and reaction vessel **105**. While specific reference will be made to these components and their individual parts and configurations, it is contemplated that system **100** may embody many forms and include multiple and/or alternative components and configurations.

According to one embodiment, system **100** utilizes reaction vessel **105** capable of maintaining sufficient reactive conditions (e.g., pressure, temperature, volume, etc.) for vaporizing and combining elemental mercury with sulfur. In exemplary embodiments, this process begins in a non-reactive environment at atmospheric pressure. It is noted that the vaporization of elemental mercury and sulfur facilitates a more complete reaction between the substances introduced to reaction vessel **105**. Further, any un-reacted vaporized elemental mercury can be drawn off and condensed back to liquid form for storage and/or future reaction. As a consequence, system **100** is capable of, but is not limited to, generating mercury (II) sulfide containing no (or substantially no) detectable levels of residual elemental mercury.

Traditionally, mercury (II) sulfide generation technologies have relied on reacting elemental mercury with sulfur at relatively low temperatures (e.g., room temperature or slightly there above). These technologies, however, fail to completely purge residual elemental mercury from generated mercury (II) sulfide. Namely, the reaction between the source elemental mercury and the sulfur reagent is not complete. This occurs primarily because the elemental mercury divides into microscopic beads during physical agitation. The microscopic beads of mercury do not readily interact with the sulfur reagent to generate mercury (II) sulfide and, for the most part, remain un-reacted. Un-reacted elemental mercury results in significant amounts of detectable residual elemental mercury in the produced mercury (II) sulfide.

Furthermore, the approach of system **100**, according to certain embodiments, stems from the recognition that reacting elemental mercury with sulfur under high temperature and pressure conditions, creates a more stable, less soluble form of mercury (II) sulfide (i.e., red mercury (II) sulfide, also known as cinnabar). It is noted that mercury (II) sulfide generally occurs in two crystalline forms: a hexagonal crystalline form known as red mercury (II) sulfide and a cubic tetrahedral crystalline form known as black mercury (II) sulfide. While

both forms are considered inert and insoluble in water and in most acidic conditions, the water solubility of red mercury (II) sulfide (e.g., $K_{sp}=3.0\times10^{-53}$ M^2) is lower than the solubility for black mercury (II) sulfide (e.g., $K_{sp}=1.9\times10^{-15}$ M^2). Thus, red mercury (II) sulfide dissolves less readily than black mercury (II) sulfide under normal environmental conditions. Accordingly, system **100**, in exemplary embodiments, is configured to produce red mercury (II) sulfide. In certain instances, the produced red mercury (II) sulfide is greater than 99.9% pure and is free (or substantially free) of detectable (or trace) amounts of residual elemental mercury.

As previously mentioned, governmental restrictions and regulations are driving the need for an approach capable of converting elemental mercury into stable, solid compounds that are suitable for long-term storage and disposal. For example, the U.S. Environmental Protection Agency (EPA) has historically favored regulations that promote the recycling and recovery of elemental mercury for commercial use over treatment and disposal of elemental mercury. However, EPA has come to recognize that as more regulations restrict the commercial uses of mercury, future commercial demand for mercury could become much less than the available supply. Continued recycling of elemental mercury under these circumstances could contribute to a growing worldwide surplus of elemental mercury. Therefore, EPA has acknowledged that the treatment and disposal of elemental mercury is a potential solution to the problem of surplus elemental mercury. As a result, EPA has developed regulations that approve of certain methods used in the processing of elemental mercury into a stable, solid compound of including mercury. In addition, many generators of elemental mercury would like to avoid selling mercury on the world market and need a viable option for treating their excess elemental mercury that takes advantage of the approved methods for processing elemental mercury.

Accordingly, various exemplary embodiments of system **100** stem from the need to convert surplus elemental mercury into a stable, solid compound that can be either disposed of or stored over long durations while minimizing the risk of potential environmental contamination.

As seen in FIG. **1**, system **100** includes elemental mercury source **101** detachably coupled to valve system **103** via supply line **107** that, in exemplary embodiments, is pressurized for the delivery of relatively high pressure elemental mercury. Valve system **103** is, in turn, detachably coupled to reaction vessel **105** via inlet **109**. According to certain embodiments, elemental mercury source **101** includes mercury supply container **111** having a predetermined elemental mercury storage capacity, such as 2,000 lbs of elemental mercury. It is contemplated, however, that any suitable storage capacity can be utilized. Supply container **111** stores elemental mercury for later reaction within reaction vessel **105** and can be mounted on, for instance, deck scale **113** including or coupled to digital readout **115**. Deck scale **113** is used, in exemplary embodiments, to monitor the amount of elemental mercury processed by system **100**. Namely, by performing continuous, periodic, or on-demand measurements of the weight of supply container **111** and the elemental mercury contained therein, system **100** can track the amount of elemental mercury introduced during a reaction process, such as the mercury (II) sulfide reaction process of FIG. **3**. In other words, a change in weight indicates an amount of elemental mercury processed or being processed. In certain embodiments, deck scale **113** communicates with a control system **117**, such as a computing device, to provide for automated monitoring and control of elemental mercury source **101**. It is contemplated that the control system may communicate with deck scale **113** (or any another suitable component of system **100**) over one or more communication networks, such as any suitable wired or wireless local area network (LAN), metropolitan area network (MAN), wide area network (WAN), etc. As such, system **100** can be configured for remote monitoring and/or controlling.

Elemental mercury source **101** also includes pump **119** coupled to supply container **111** via supply line **121**. In exemplary embodiments, pump **119** is capable of pumping elemental mercury at relatively high pressures. As such, pump **119** can draw and pressurize elemental mercury from supply container **111** via supply line **121** and can deliver the pressurized elemental mercury to valve system **103** via supply line **107**. Accordingly, supply lines **107** and **121** can be manufactured from materials (e.g., iron, iron alloy, steel, steel alloy, etc.) of sufficient strength to withstand the relatively high pressures generated when pumping elemental mercury from supply container **111** to valve system **103**. It is contemplated that alternate means of feeding elemental mercury to valve system **103** or reaction vessel **105** (e.g., manual loading, gravity feed, etc.) may be used in lieu of, or in addition to, one or more of the components described above with respect to elemental mercury source **101**.

According to exemplary embodiments, valve system **103** is detachably coupled to supply line **107** of elemental mercury source **101** through inlet **123**. Inlet **123** provides an input to valve system **103** that includes valves **125** and **127**, as well as shutoff valve **129**. The valve system **103** directs the flow of elemental mercury (such as pressurized elemental mercury) from elemental mercury source **101** to reaction vessel **105** by opening and closing one or more of valves **125**, **127**, or **129** to either permit or block the flow of elemental mercury. Shutoff valve **129** is provided as a manual safety shutoff valve and can, therefore, block the flow of elemental mercury into valve system **103** even when valves **125** and **127** are in an open (or relatively open) position (or state). It is contemplated that alternate embodiments of valve system **103** may include only one valve or any number of valves to manage the flow of elemental mercury from elemental mercury source **101** to reaction vessel **105**. In this manner, opening valves **125** and **127**, as well as shutoff valve **129**, enables elemental mercury to flow from elemental mercury source **101** to reaction vessel **105**. Valve system **103** enables elemental mercury to flow in only one direction, i.e., from inlet **123** to reaction vessel **105**, by the inclusion of ball check valve **131**. That is, any pressure from a backflow of mercury forces the ball of ball check valve **131** against an outlet of the shutoff valve **129** and, thereby, closes off the pathway to potential reverse flows of elemental mercury.

Valve system **103** is detachably coupled to reaction vessel **105** via inlet **109**. Reaction vessel **105** can be surrounded by insulation jacket **133** that contains one or more heating elements for heating reaction vessel **105** to an appropriate reaction temperature. According to particular embodiments, the heating element(s) are capable of heating reagents within reaction vessel **105** to temperatures of about 361.1° C. (or 650° F.). In certain embodiments, insulation jacket **133** also includes one or more active cooling elements for quickly cooling reaction vessel **105** from reaction temperatures to, for instance, room temperature, such as after red mercury (II) sulfide has been produced via system **100**. Active cooling enables system **100** to be capable of processing more elemental mercury in a given time period by shortening a period of time for cooling reaction vessel **105** between processing cycles.

In exemplary embodiments, a vacuum state is created within reaction vessel **105** at the beginning of reaction processes prior to heating reaction vessel **105**. To help create this

initial vacuum state, a vacuum pump **135** can interface with reaction vessel **105** via, for instance, inlet **137** at reaction vessel **105** of vacuum line **139**. Vacuum line **139** can be manufactured from materials (e.g., iron, iron alloy, steel, steel alloy, etc.) of sufficient strength to withstand the vacuum generated by vacuum pump **135**. Vacuum line **139** may include vacuum pressure gauge **141** (such as a mechanical or electrical vacuum pressure gauge) for monitoring a level of vacuum generated by vacuum pump **135**. In certain embodiments, vacuum pressure gauge **141** communicates with control system **117**. Vacuum pump **135**, in exemplary embodiments, creates a vacuum level of greater than about 25 inHg within reaction vessel **105**. In addition, vacuum pump **135** may be attached to a source of a compressed gas that does not react with either elemental mercury or sulfur (e.g., nitrogen gas source **143**) to enable vacuum pump **135** to back fill reaction vessel **105** with the gas before achieving a target vacuum level. This backfilling purges reaction vessel **105** of reactive gases that could potentially interfere with reaction processes (e.g., purging oxygen from reaction vessel **105** to minimize oxidation of elemental mercury and/or sulfur during reaction processes). It is noted, however, that the reaction of elemental mercury with sulfur may nonetheless proceed without this backfilling procedure. Therefore, certain embodiments do not include a source of non-reactive compressed gas (e.g., nitrogen gas source **143**) for backfilling reaction vessel **105**.

Between the vacuum pump **135** and insulation jacket **133** along vacuum line is chilled condenser **145**. Chilled condenser **145** may be any type of condenser that can operate at the conditions within reaction vessel **105** to condense unreacted elemental mercury vapor drawn from reaction vessel **105** to liquid form. Un-reacted, vaporized elemental mercury is drawn from reaction vessel **105** and condensed at chilled condenser **145** back into liquid form. The condensed, liquid elemental mercury is then collected in condensing chamber **147** through condensate line **149**. However, in certain embodiments, the condensed, liquid elemental mercury instead may be collected within the supply container **111** or other container. By including the chilled condenser **145**, the system **100** qualifies as a retort under approved methods of treatment by EPA regulations. Further, drawing off un-reacted elemental mercury by chilled condenser **145** allows for the production of greater than 99.9% pure red mercury (II) sulfide that is free (or substantially free) of detectable (or trace) amounts of residual elemental mercury.

Reaction vessel **105** can also include, for example, pressure gauge **151** (e.g., mechanical or electrical pressure gauge) and temperature gauges **153** and **155** to monitor one or more reaction conditions of reaction vessel **105**. In certain exemplary embodiments, one or more of these gauges **151**, **153**, and **155** communicate with control system **117** so as to enable automated monitoring and controlling of mercury (II) sulfide generation processes. However, in other embodiment, one or more of these gauges **151**, **153**, and **155** may not be included with reaction vessel **105**.

In various embodiments, reaction vessel **105** may be a stainless steel cylindrical container measuring, for instance, substantially 24 inches in length and substantially 12 inches in diameter. A vessel of such dimensions can process approximately 400 to 500 lbs of elemental mercury per reaction process (or batch). It is contemplated that reaction vessel **105** can be alternatively sized, scaled up, or scaled down depending on an anticipated amount of elemental mercury to be processed in any given batch. According to one embodiment, reaction vessel **105** includes ¼-inch thick stainless steel side wall, 1-inch thick top plate, and 1½-inch thick bottom plate. It is noted that the dimensioning of reaction vessel **105** may be suitably modified, such as modified to accommodate reaction conditions (e.g., pressure, temperature, volume, etc.) of reaction vessel **105**. One or more flanges (not shown for illustrative convenience) may surround openings in reaction vessel **105** to accommodate, for example, inlet **109**, inlet **137**, and gauges **151**, **153** and **155**. However, inlet **109**, for example, may be formed as part of side wall of reaction vessel **105** such that no flange is required. The details of reaction vessel **105** are exemplary, and it is contemplated that any equivalent specifications or construction of reaction vessel **105** may be used provided the vessel is sufficiently robust to withstand the reactive conditions (e.g., pressure, temperature, volume, etc.) generated during mercury (II) sulfide generation. Reaction vessel **105** also can be constructed of any suitable material that does not readily react with either elemental mercury or sulfur.

Reaction vessel **105** also includes shaft **157** that extends down the center from one plate (e.g., end) of reaction vessel **105** to the opposite plate (e.g., end), such as from bottom plate towards top plate. In various embodiments, the reaction vessel **105** is configured with one or more mixing systems to act on the reactants (e.g., elemental mercury or sulfur) introduced into the reaction vessel **105**. As shown in FIG. **1**, one example of a mixing system is a paddle system comprising a shaft **157** which may be attached at both plates or at only one plate to reaction vessel **105**. Attached to and extending radially outward from shaft **157** are paddles **159**. Although illustrated as extending from shaft **157** in an alternating sides pattern, paddles **159** may extend from shaft **157** according to any pattern, such as each paddle **159** extending at a 90 degree angle from shaft **157** as compared to a previous paddle **159**. Further, paddles **159** may have various shapes and configurations, and all paddles **159** may have the same shape or have various different shapes. Although not shown (for illustrative convenience), the reaction vessel **105** may also include baffles extending radially inward from the inner surface of reaction vessel **105** that cooperate with paddles **159** in mixing the elemental mercury and sulfur within reaction vessel **105**.

Another example of a mixing system is a ribbon style blender (not illustrated) that can be configured in place of the example paddle **159** assembly described above. In one embodiment, the ribbon style blender is constructed in such a way as to move the outer material (e.g., reactants and/or product) laterally in one direction while an inner ribbon moves the material laterally in the opposite direction. The example paddle **159** assembly and the ribbon style blender assembly are provided for illustration and are not intended as limitations. Accordingly, it is contemplated that any equivalent agitator or mixing system may be used according to the various embodiments of the reaction vessel **105** described herein.

In one embodiment, motor **161** in cooperation with drive shaft **163** is detachably coupled to the mixing system (e.g., to shaft **157** of reaction vessel **105** at a couple point surrounded by seal **165**). Motor **161** is designed with enough power to rotate shaft **157** and paddles **159** to mix elemental mercury and sulfur during reaction, such as at three to ten rotations per minute (rpm), or higher based on a desired degree of mixing. Seal **165** is designed to withstand high reaction conditions (e.g., temperatures and pressures) within reaction vessel **105** during formation of red mercury (II) sulfide.

Although the elemental mercury source **101** and valve system **103** are discussed with respect to inputting elemental mercury into reaction vessel **105**, it is also contemplated that a second source and valve system may be provided for controlled delivery of sulfur to reaction vessel **105**. For example,

second source and valve system for controlled delivery of sulfur to reaction vessel **105** may be attached to threaded connection **167** for delivery of sulfur to reaction vessel **105** through inlet **109**. Further, it is contemplated that the second source and valve system may communicate with control system **117** so as to enable automated monitoring and/or controlling of delivery of sulfur to reaction vessel **105** for system **100**. Further, in certain embodiments, system **100** may include sight glass **169** in communication with inlet **109**. Sight glass **169** allows for a visual indication of delivery of elemental mercury and/or sulfur into reaction vessel **105**.

FIG. **2** is a detailed schematic diagram of reaction vessel system **200**, according to an exemplary embodiment. Although FIG. **2** illustrates dimensions of various components of reaction vessel system **200**, the dimensions are merely exemplary and can vary between embodiments reaction vessel system **200**. Reaction vessel system **200** includes reaction vessel **105** illustrated in FIG. **1** connected to stand **201**. Stand **201** includes support arm **203** and pivot art **205**. Pivot arm **205** is connected to actuator **207** that actuates pivot arm **205** between position **209** and position **211**. At position **209**, pivot arm **205** forms, for example, a 48 degree angle to base of stand **201**. At position **211**, pivot arm **205** forms, for example, a 45 degree angle to base of stand **201**. Pivot arm **205** may also include piston **213** that extends and retracts based on, for example, whether pivot arm **205** is in position **209** or position **211**. Actuating from position **209** to position **211** may allow for removal of red mercury (II) sulfide from inside of reaction vessel **105** upon completion of reaction processes. In one embodiment, the end of reaction vessel **105** that moves from position **209** to **211** may include the ability to open for removal of the red mercury (II) sulfide. In one embodiment, reaction vessel **105** may include a pivot point **215** at the end where shaft **157** couples to drive shaft **163** to allow reaction vessel **105** to pivot between position **209** and **211** while shaft **157** and drive shaft **163** remain coupled. Alternatively, pivot point **215** may connect the end of reaction vessel **105** to support arm **203** and allow reaction vessel **105** to pivot with respect to support arm **203** between position **209** and position **211**. In yet other alternative embodiments, the reaction vessel **105** may be configured with a door (not illustrated) that can be removed following completion of the reactive process. By way of example, a coupling can be added to the door so that the mixing system (e.g., the paddle **159** or the ribbon style blender system discussed above) can be run to that mercury (II) sulfide resulting from the reactive process is pushed out of the reaction vessel **105** and into a receiving system (not illustrated) where it can be transferred to a storage container (not illustrated).

In certain embodiments, reaction vessel **105** may include one or more inlets **217***a*, **217***b*, and **217***c*. For example, inlet **217***c* may correspond to a connection of vacuum line **139** to reaction vessel **105** rather than inlet **137** illustrated in FIG. **1**. Alternatively, inlet **217***a* or **217***b* may correspond to inlet **137** of FIG. **1** that allows vacuum line **139** to directly connect to reaction vessel **105** (rather than going through inlet **109**). In other embodiments, inlet **217***a* may correspond to inlet **137** for vacuum line **139** and inlet **217***b* may correspond to a separate connection for chilled condenser **145** to reaction vessel **105**.

FIG. **3** is a flowchart of a process for generating red mercury (II) sulfide from elemental mercury, according to an exemplary embodiment. For illustrative purposes, process **300** is described with respect to FIG. **1**. It is noted that the steps of process **300** may be performed in any suitable order, as well as combined or separated in any suitable manner Further, process **300** may be monitored and/or controlled via control system **117**, which may communicate other components within system **100** via one or more communication networks.

Process **300** begins with the addition of, for instance, pure reagent-grade sulfur to reaction vessel **105** (step **301**). It is noted that when the sulfur is introduced to reaction vessel **105**, reaction vessel **105** is, in exemplary embodiments, substantially clean and at substantially room temperature at, for instance, atmospheric pressure. The sulfur may be delivered via the aforementioned second source and the valve system under control of, for instance, the aforementioned control system **117**. An amount of sulfur added to reaction vessel **105** is slightly less than the amount stoichiometrically needed to fully react with an amount of elemental mercury to be processed. It is noted that by using an amount of sulfur that is slightly less than stoichiometrically needed can reduce the amount of excess sulfur used during process **300**. For example, if 400 lbs of elemental mercury are to be processed, approximately 60 lbs to 63 lbs of sulfur can be added to reaction vessel **105** at step **301**.

After adding an appropriate amount of sulfur, elemental mercury is added to reaction vessel **105** (step **303**). It is noted that when the elemental mercury is introduced to reaction vessel **105**, reaction vessel **105** is, in exemplary embodiments, at substantially room temperature at, for instance, atmospheric pressure. The elemental mercury may be delivered via the aforementioned elemental mercury source **101** and valve system **103** under control of, for instance, the aforementioned control system **117**. An amount of elemental mercury added to reaction vessel **105** is slightly more than the amount stoichiometrically needed to fully react with an amount of sulfur to be processed. It is noted that by using an amount of elemental mercury that is slightly more than stoichiometrically needed can reduce the amount of excess sulfur used during process **300**. Further, as discussed below, any remaining elemental mercury can be drawn from reaction vessel **105** in vapor form and condensed at chilled condenser **145** back to liquid form into condensing chamber **147**. Upon delivery of elemental mercury to reaction vessel **105**, one or more of valves **125**, **127**, and **129** can be arranged in a closed position (or state) to ensure a proper seal of reaction vessel **105**.

After adding the elemental mercury and sulfur into reaction vessel **105**, motor **161** is started (step **305**). Motor **161** turns shaft **157** and paddles **159** to agitate the elemental mercury and sulfur within reaction vessel **105**. Motor **161** may operate to turn shaft **157** and paddles **159** at, for example, three to ten rpm. Prior to or after motor **161** is turned on, vacuum line **139** is connected to reaction vessel **105** to draw a vacuum within the reaction vessel (step **307**). Vacuum pump **135** can be actuated to create a vacuum within reaction vessel **105** at, for instance, a level greater than 25 inHg. In exemplary embodiments, with reaction vessel **105** sealed, any gas (e.g., air) in reaction vessel **105** can be removed and, thereby, replaced by a non-reactive atmosphere (e.g., nitrogen) from nitrogen gas source **143** prior to drawing the vacuum. Vacuum pump **135** can then backfill reaction vessel **105** with a non-reactive gas before achieving a final vacuum level. According to one embodiment, the non-reactive gas is nitrogen. It is contemplated, however, that any suitable gas (e.g., argon, etc.) that does not react with either elemental mercury or sulfur may be used to create a non-reactive atmosphere in reaction vessel **105**.

In step **309**, one or more electric heating elements of insulation jacket **133** can be actuated to heat reaction vessel **105** to an initial temperature. In certain embodiments, the initial temperature may be between 65 and 205° C., such as 166.67°

C. (or 300° F.). The one or more electric heating elements gradually heat reaction vessel to the initial temperature, such as by increasing the temperature by 1.2° C. every minute. Reaction vessel **105** is, in exemplary embodiments, heated to a temperature sufficient to melt the sulfur so that within reaction vessel **105** is hot sulfur in a liquid state and hot mercury in a liquid state. At this temperature, there may also be some mercury vapor present within reaction vessel **105** but not enough to force the mercury vapor out to vacuum pump **135**. The one or more heating elements can be used to maintain reaction vessel **105** at the appropriate initial temperature. The reaction vessel **105** is maintained at the initial temperature for 15 to 120 minutes.

After initially heating the elemental mercury and sulfur in reaction vessel **105**, the one or more electric heating elements of insulation jacket **133** are actuated to heat reaction vessel **105** to a final reaction temperature (step **311**). Reaction vessel **105** is heated to a final reaction temperature between 315 and 538° C., such as 361.1° C. (or 650° F.), to vaporize the elemental mercury and sulfur and cause a reaction to form red mercury (II) sulfide. According to one embodiment, the temperature of reaction vessel **105** is below the sublimation point of red mercury (II) sulfide. As a result, the red mercury (II) sulfide generated during process **300** can crystallize (such as immediately or after a duration of time) and deposit in reaction vessel **105**. Further, at this temperature, any black mercury (II) sulfide that is formed is converted into red mercury (II) sulfide. During formation of the red mercury (II) sulfide, un-reacted elemental mercury vapor is drawn off to the chilled condenser **145**. At chilled condenser **145**, the elemental mercury vapor is condensed back to liquid form and collected in condensing chamber **147**. By condensing un-reacted elemental mercury vapor, system **100** qualifies as a retort and satisfies certain regulations regarding the processing and/or disposal of mercury, such as EPA regulations. For example, drawing off un-reacted elemental mercury by chilled condenser **145** allows for the production of greater than 99.9% pure red mercury (II) sulfide that is free (or substantially free) of detectable (or trace) amounts of residual elemental mercury while also fully reacting the original sulfur.

After a desired amount of elemental mercury and sulfur are processed, and un-reacted elemental mercury vapor is condensed by chilled condenser **145**, reaction vessel **105** is cooled to enable safe unloading of the mercury (II) sulfide (step **313**). According to certain embodiments, an active cooling system, such as one or more cooling elements of insulation jacket **133**, can rapidly cool reaction vessel **105**. Reaction vessel **105** can also be cooled by simply turning off the one or more heating elements of insulation jacket **133** and allowing reaction vessel **105** to cool through natural ambient heat transfer. Once reaction vessel **105** is cooled, the red mercury (II) sulfide generated within reaction vessel **105** can be removed (step **315**). In certain instances, process **300** produces crusty layers of mercury (II) sulfide in reaction vessel **105** and, therefore, should also be removed.

FIG. **4** is a diagram of a computer system that can be used to implement various exemplary embodiments of control system **117**. The computer system **400** includes bus **401** or other communication mechanism for communicating information and processor **403** coupled to bus **401** for processing information. Computer system **400** also includes main memory **405**, such as random access memory (RAM) or other dynamic storage device, coupled to bus **401** for storing information and instructions to be executed by processor **403**. Main memory **405** also can be used for storing temporary variables or other intermediate information during execution of instructions by processor **403**. Computer system **400** may further include read only memory (ROM) **407** or other static storage device coupled to bus **401** for storing static information and instructions for processor **403**. Storage device **409**, such as a magnetic disk or optical disk, is coupled to bus **401** for persistently storing information and instructions.

Computer system **400** may be coupled via bus **401** to display **411**, such as a cathode ray tube (CRT), liquid crystal display, active matrix display, or plasma display, for displaying information to a computer user. Input device **413**, such as a keyboard including alphanumeric and other keys, is coupled to bus **401** for communicating information and command selections to processor **403**. Another type of user input device is cursor control **415**, such as a mouse, a trackball, or cursor direction keys, for communicating direction information and command selections to processor **403** and for controlling cursor movement on display **411**.

According to an embodiment of the invention, the processes described herein are performed by computer system **400**, in response to processor **403** executing an arrangement of instructions contained in main memory **405**. Such instructions can be read into main memory **405** from another computer-readable medium, such as storage device **409**. Execution of the arrangement of instructions contained in main memory **405** causes processor **403** to perform the process steps described herein. One or more processors in a multiprocessing arrangement may also be employed to execute the instructions contained in main memory **405**. In alternative embodiments, hard-wired circuitry may be used in place of or in combination with software instructions to implement the embodiment of the invention. Thus, embodiments of the invention are not limited to any specific combination of hardware circuitry and software.

Computer system **400** also includes communication interface **417** coupled to bus **401**. Communication interface **417** provides a two-way data communication coupling to network link **419** connected to local network **421**. For example, communication interface **417** may be a digital subscriber line (DSL) card or modem, an integrated services digital network (ISDN) card, a cable modem, a telephone modem, or any other communication interface to provide a data communication connection to a corresponding type of communication line. As another example, communication interface **417** may be a local area network (LAN) card (e.g. for Ethernet™ or an Asynchronous Transfer Model (ATM) network) to provide a data communication connection to a compatible LAN. Wireless links can also be implemented. In any such implementation, communication interface **417** sends and receives electrical, electromagnetic, or optical signals that carry digital data streams representing various types of information. Further, communication interface **417** can include peripheral interface devices, such as a Universal Serial Bus (USB) interface, a PCMCIA (Personal Computer Memory Card International Association) interface, etc. Although a single communication interface **417** is depicted in FIG. **4**, multiple communication interfaces can also be employed.

The network link **419** typically provides data communication through one or more networks to other data devices. For example, network link **419** may provide a connection through local network **421** to host computer **423**, which has connectivity to network **425** (e.g. a wide area network (WAN) or the global packet data communication network now commonly referred to as the "Internet") or to data equipment operated by a service provider. Local network **421** and network **425** both use electrical, electromagnetic, or optical signals to convey information and instructions. The signals through the various networks and the signals on network link **419** and through communication interface **417**, which communicate digital

data with computer system **400**, are exemplary forms of carrier waves bearing the information and instructions.

Computer system **400** can send messages and receive data, including program code, through the network(s), network link **419**, and communication interface **417**. In the Internet example, a server (not shown) might transmit requested code belonging to an application program for implementing an embodiment of the invention through network **425**, local network **421** and communication interface **417**. Processor **403** may execute the transmitted code while being received and/or store the code in storage device **409**, or other non-volatile storage for later execution. In this manner, computer system **400** may obtain application code in the form of a carrier wave.

The term "computer-readable medium" as used herein refers to any medium that participates in providing instructions to processor **403** for execution. Such a medium may take many forms, including but not limited to non-volatile media, volatile media, and transmission media. Non-volatile media include, for example, optical or magnetic disks, such as storage device **409**. Volatile media include dynamic memory, such as main memory **405**. Transmission media include coaxial cables, copper wire and fiber optics, including the wires that comprise bus **401**. Transmission media can also take the form of acoustic, optical, or electromagnetic waves, such as those generated during radio frequency (RF) and infrared (IR) data communications. Common forms of computer-readable media include, for example, a floppy disk, a flexible disk, hard disk, magnetic tape, any other magnetic medium, a CD-ROM, CDRW, DVD, any other optical medium, punch cards, paper tape, optical mark sheets, any other physical medium with patterns of holes or other optically recognizable indicia, a RAM, a PROM, an EPROM, a FLASH-EPROM, any other memory chip or cartridge, a carrier wave, or any other medium from which a computer can read.

Various forms of computer-readable media may be involved in providing instructions to a processor for execution. For example, the instructions for carrying out at least part of the embodiments of the invention may initially be borne on a magnetic disk of a remote computer. In such a scenario, the remote computer loads the instructions into main memory and sends the instructions over a telephone line using a modem. A modem of a local computer system receives the data on the telephone line and uses an infrared transmitter to convert the data to an infrared signal and transmit the infrared signal to a portable computing device, such as a personal digital assistant (PDA) or a laptop. An infrared detector on the portable computing device receives the information and instructions borne by the infrared signal and places the data on a bus. The bus conveys the data to main memory, from which a processor retrieves and executes the instructions. The instructions received by main memory can optionally be stored on storage device either before or after execution by processor.

While certain exemplary embodiments and implementations have been described herein, other embodiments and modifications will be apparent from this description. Accordingly, the invention is not limited to such embodiments, but rather to the broader scope of the presented claims and various obvious modifications and equivalent arrangements.

What is claimed is:

1. An apparatus comprising:

a valve system configured for introduction of elemental mercury and sulfur into a reaction vessel;

the reaction vessel configured with a mixing system for mixing the elemental mercury and the sulfur to form mercury (II) sulfide, a vacuum system for creating a vacuum within the

reaction vessel under seal, and a heating system for heating the reaction vessel to an initial temperature; and

an outlet from the reaction vessel configured for removing mercury (II) sulfide resulting from a reaction of the elemental mercury and the sulfur in the reaction vessel, and for removing an unreacted portion of the elemental mercury.

2. An apparatus of claim **1**, wherein the reaction vessel is at a substantially room temperature and at a substantially atmospheric pressure on the introduction of the elemental mercury and the sulfur.

3. An apparatus of claim **1**, wherein the heating system of the reaction vessel heats the reaction vessel from the initial temperature to a final temperature.

4. An apparatus of claim **3**, wherein the initial temperature is above a melting point of the sulfur and below a boiling point of the elemental mercury, and wherein the final temperature is below a sublimation point of the mercury (II) sulfide.

5. An apparatus of claim **1**, wherein the mixing system includes a ribbon style blender system, a paddle system, or a combination thereof.

6. An apparatus of claim **1**, further comprising:

a condenser configured to draw off the unreacted portion of the elemental mercury, and to condense the unreacted portion.

7. An apparatus of claim **1**, further comprising:

a cooling system configured to cool the reaction vessel for an unloading of the mercury (II) sulfide,

wherein the cooling system is a passive cooling system, an active cooling system, or a combination thereof.

8. An apparatus of claim **1**, wherein the vacuum system is configured to replace a gas within the reaction vessel with a non-reactive gas.

9. An apparatus of claim **1**, wherein the mixing system is configured to mix the elemental mercury and the sulfur at a predetermined rate.

10. A method comprising:

introducing elemental mercury and sulfur into a reaction vessel;

mixing the elemental mercury and the sulfur in the reaction vessel to initiate a reaction of the elemental mercury and the sulfur to form mercury (II) sulfide, wherein the reaction vessel is under a vacuum and heated to an initial temperature;

removing the mercury (II) sulfide via an outlet of the reaction vessel; and

drawing off an unreacted portion of the elemental mercury from the reaction vessel.

11. A method of claim **10**, wherein the reaction vessel is at a substantially room temperature and at a substantially atmospheric pressure on introducing the elemental mercury and the sulfur.

12. A method of claim **10**, further comprising:

heating the reaction vessel from the initial temperature to a final temperature during the reaction.

13. A method of claim **12**, wherein the initial temperature is above a melting point of the sulfur and below a boiling point of the elemental mercury, and wherein the final temperature is below a sublimation point of the mercury (II) sulfide.

14. A method of claim **10**, further comprising:

using a ribbon style blender system, a paddle system, or a combination thereof to mix the elemental mercury and the sulfur in the reaction vessel.

15. A method of claim **10**, further comprising:

condensing the unreacted portion of the elemental mercury.

16. A method of claim **10**, further comprising:

cooling the reaction vessel for an unloading of the mercury (II) sulfide using a passive cooling system, an active cooling system, or a combination thereof.

17. A method of claim **10**, further comprising: replacing a gas within the reaction vessel with a non-reactive gas during the reaction.

18. A method of claim **10**, further comprising: mixing the elemental mercury and the sulfur at a predetermined rate.

19. A system comprising:

a reaction vessel;

a first source of elemental mercury;

a second source of sulfur; and

a control system,

wherein the control system is configured to initiate at least one of:

an introduction of the elemental mercury and the sulfur into the reaction vessel;

a mixing of the elemental mercury and the sulfur in the reaction vessel to initiate a reaction of the elemental mercury and the sulfur to form mercury (II) sulfide, wherein the reaction vessel is under a vacuum and heated to an initial temperature; and a removal of the mercury (II) sulfide and a portion of unreacted elemental mercury via an outlet of the reaction vessel.

20. A system of claim **1**, wherein the reaction vessel is at a substantially room temperature and at a substantially atmospheric pressure on the introduction of the elemental mercury and the sulfur.

* * * * *