US009271281B2

(12) United States Patent
Kuo et al.

(10) Patent No.: US 9,271,281 B2
(45) Date of Patent: Feb. 23, 2016

(54) **METHOD AND APPARATUS TO IMPROVE INTER-BAND CARRIER AGGREGATION (CA) IN TDD (TIME DIVISION DUPLEX) MODE**

(75) Inventors: **Richard Lee-Chee Kuo**, Taipei (TW); **Li-Chih Tseng**, Taipei (TW); **Ko-Chiang Lin**, Taipei (TW)

(73) Assignee: **INNOVATION SONIC CORPORATION**, Taipei (TW)

(*) Notice: Subject to any disclaimer, the term of this patent is extended or adjusted under 35 U.S.C. 154(b) by 684 days.

(21) Appl. No.: **13/477,487**

(22) Filed: **May 22, 2012**

(65) **Prior Publication Data**

US 2012/0281601 A1 Nov. 8, 2012

Related U.S. Application Data

(63) Continuation-in-part of application No. 13/464,472, filed on May 4, 2012, now Pat. No. 8,797,924.

(60) Provisional application No. 61/489,003, filed on May 23, 2011, provisional application No. 61/483,407, filed on May 6, 2011.

(51) **Int. Cl.**

H04W 72/04	(2009.01)
H04L 5/00	(2006.01)
H04L 5/14	(2006.01)
H04L 1/18	(2006.01)

(52) **U.S. Cl.**

CPC ***H04W 72/042*** (2013.01); ***H04L 5/001*** (2013.01); ***H04L 5/1469*** (2013.01); *H04L 1/188* (2013.01)

(58) **Field of Classification Search**

None

See application file for complete search history.

(56) **References Cited**

U.S. PATENT DOCUMENTS

2010/0110897	A1	5/2010	Chun et al.	
2010/0322173	A1	12/2010	Marinier et al.	
2011/0002281	A1	1/2011	Terry et al.	
2011/0105069	A1 *	5/2011	Gaal et al.	455/226.1

(Continued)

FOREIGN PATENT DOCUMENTS

EP	2521415	A1	11/2012
KR	WO 2010/126273	A2 *	11/2010

(Continued)

OTHER PUBLICATIONS

3GPP TS 36.321 V8.6.0 (Jul. 2009).

(Continued)

Primary Examiner — Yemane Mesfin
Assistant Examiner — Peter Chen
(74) *Attorney, Agent, or Firm* — Blue Capital Law Firm, P.C.

(57) **ABSTRACT**

A method and apparatus are disclosed to improve inter-band carrier aggregation (CA) in a UE (User Equipment) in TDD (Time Division Duplex) mode. In one embodiment, the method includes connecting the UE with a PCell (Primary Serving Cell). The method further includes configuring the UE with at least one SCell (Secondary Serving Cell), among which at least one SCell is deactivated, wherein TDD UL-DL (Uplink-Downlink) configurations of the PCell and the at least one SCell may be different. The method also includes taking a TDD UL-DL configuration of an activated serving cell into consideration for defining consecutive PDCCH (Physical Downlink Control Channel) subframes of a drx-InactivityTimer, and not taking a TDD UL-DL configuration of a deactivated serving cell into consideration.

16 Claims, 5 Drawing Sheets

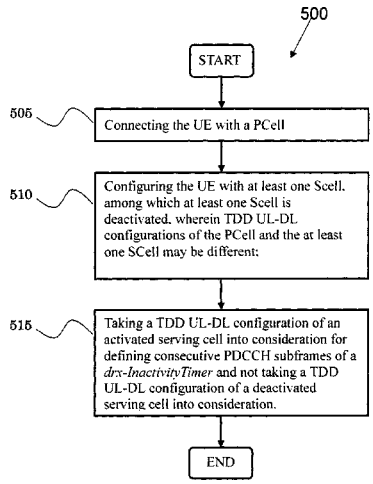

(56) **References Cited**

U.S. PATENT DOCUMENTS

2011/0170420	A1*	7/2011	Xi et al.	370/241
2011/0268087	A1*	11/2011	Kwon et al.	370/331
2012/0014257	A1*	1/2012	Ahluwalia	H04W 72/005 370/241
2012/0057490	A1*	3/2012	Park et al.	370/252
2013/0148535	A1*	6/2013	Baghel	H04L 1/0026 370/252
2014/0036742	A1*	2/2014	Charbit et al.	370/280
2015/0223085	A1*	8/2015	Siomina	H04W 52/0206 370/252

FOREIGN PATENT DOCUMENTS

WO	2010100966	A1	9/2010
WO	2011038625	A1	4/2011

OTHER PUBLICATIONS

Office Action on corresponding foreign application (EP12004024.1) from EPO dated Jul. 4, 2013.

Liu-Jingxiu et alia, "on the impact of realistic control channel constraints in UTRAN LTE TDD system", IEEE.

3GPP TSG RAN WG2 #77, Dresden, Germany, Feb. 6-10, 2012 (R2-120465).

Search Report on corresponding EP Patent Application No. 12004024.1 dated Aug. 16, 2012.

Bibliographic Data Abstract of the corresponding Japanese Application No. JP2012-116930 from Espacenet.

Bibliographic Data Abstract of the corresponding Taiwan Application No. TW 101118283 from Espacenet.

* cited by examiner

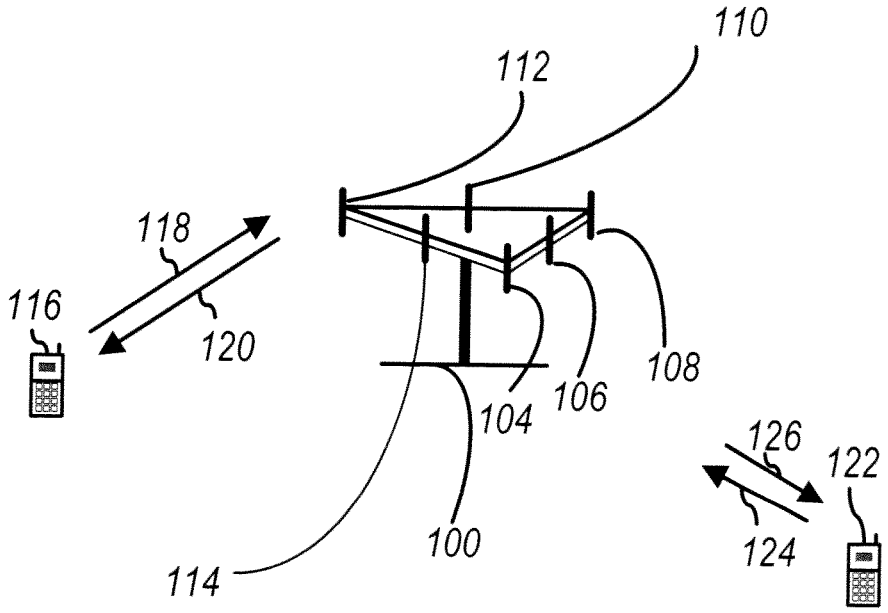

FIG. 1

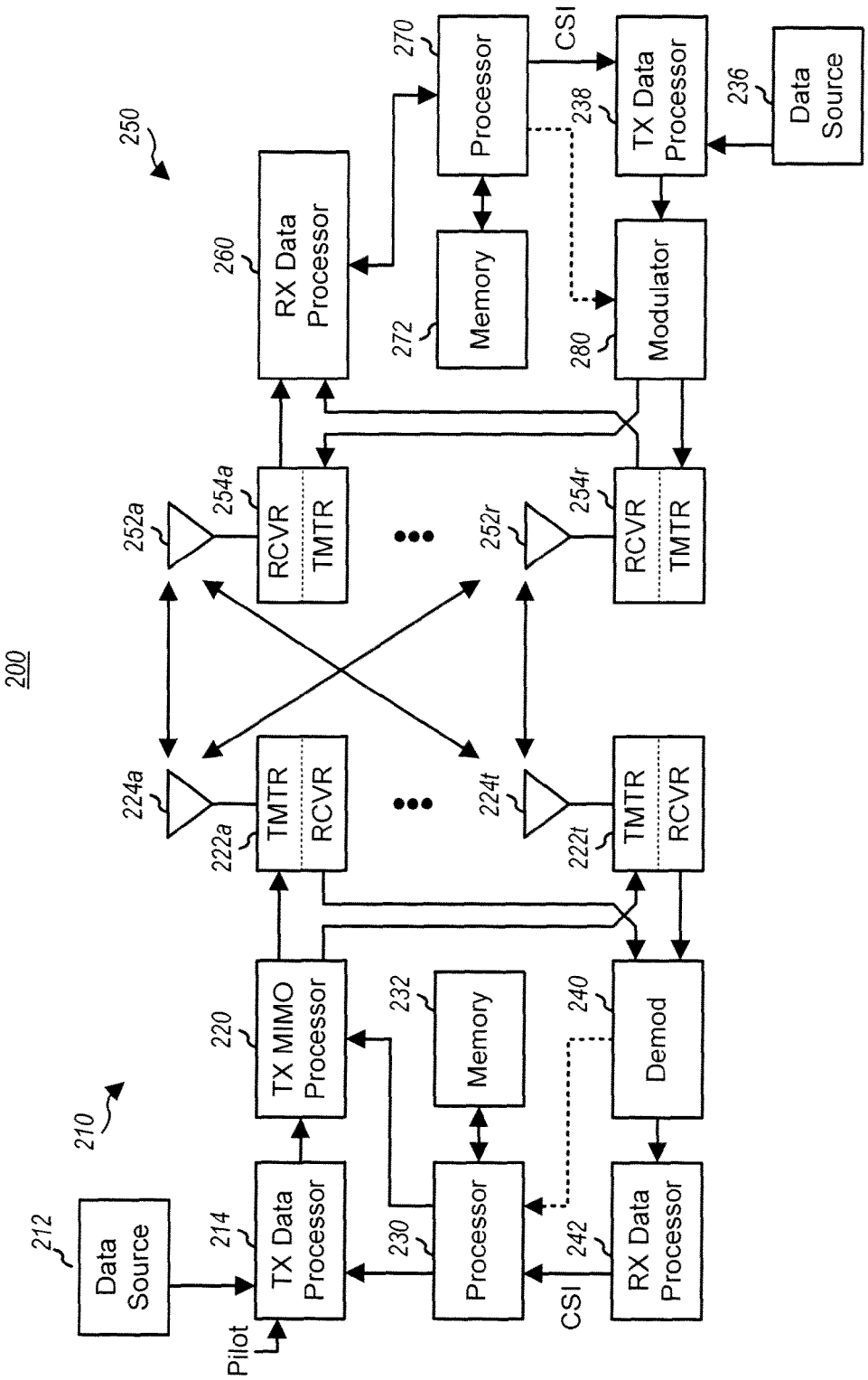
200
210
212
Data Source
214
TX Data Processor
Pilot
220
TX MIMO Processor
222a
TMTR
RCVR
224a
252a
254a
RCVR
TMTR
250
260
RX Data Processor
230
Processor
232
Memory
270
Processor
272
Memory
CSI
238
TX Data Processor
236
Data Source
280
Modulator
252r
254r
RCVR
TMTR
224t
222t
TMTR
RCVR
240
Demod
242
RX Data Processor
CSI

FIG. 2

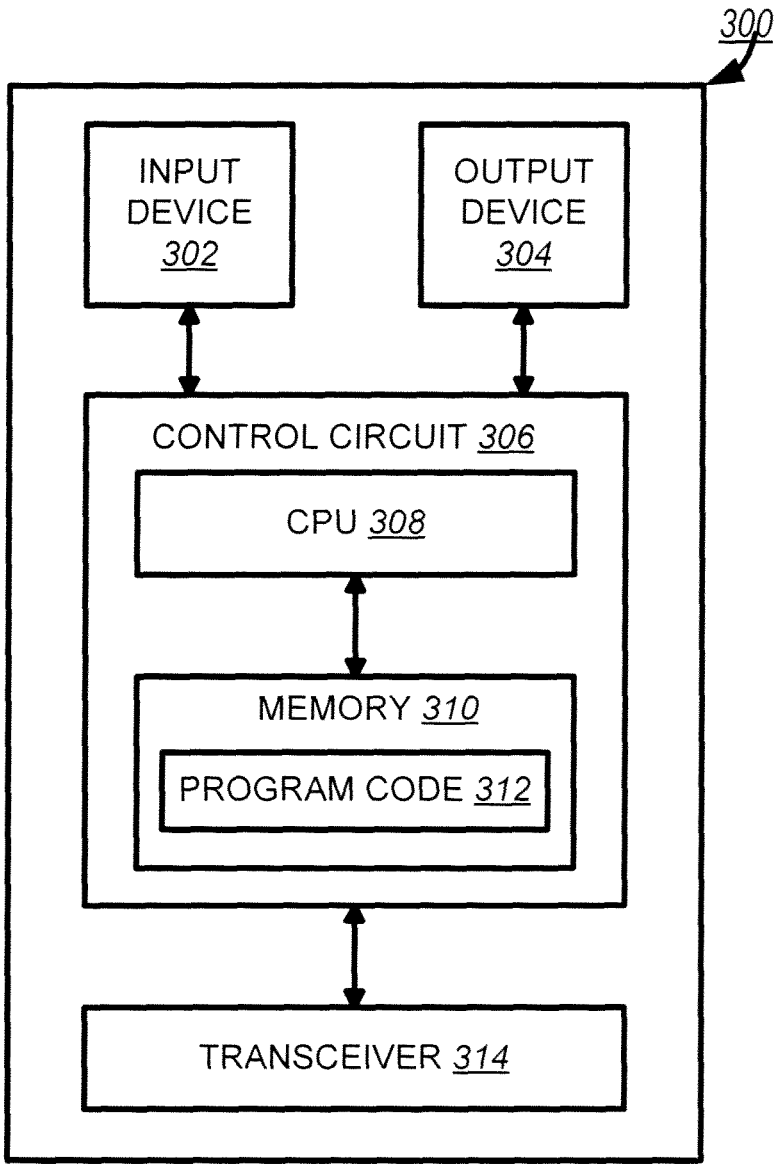
300
INPUT DEVICE 302
OUTPUT DEVICE 304
CONTROL CIRCUIT 306
CPU 308
MEMORY 310
PROGRAM CODE 312
TRANSCEIVER 314

FIG. 3

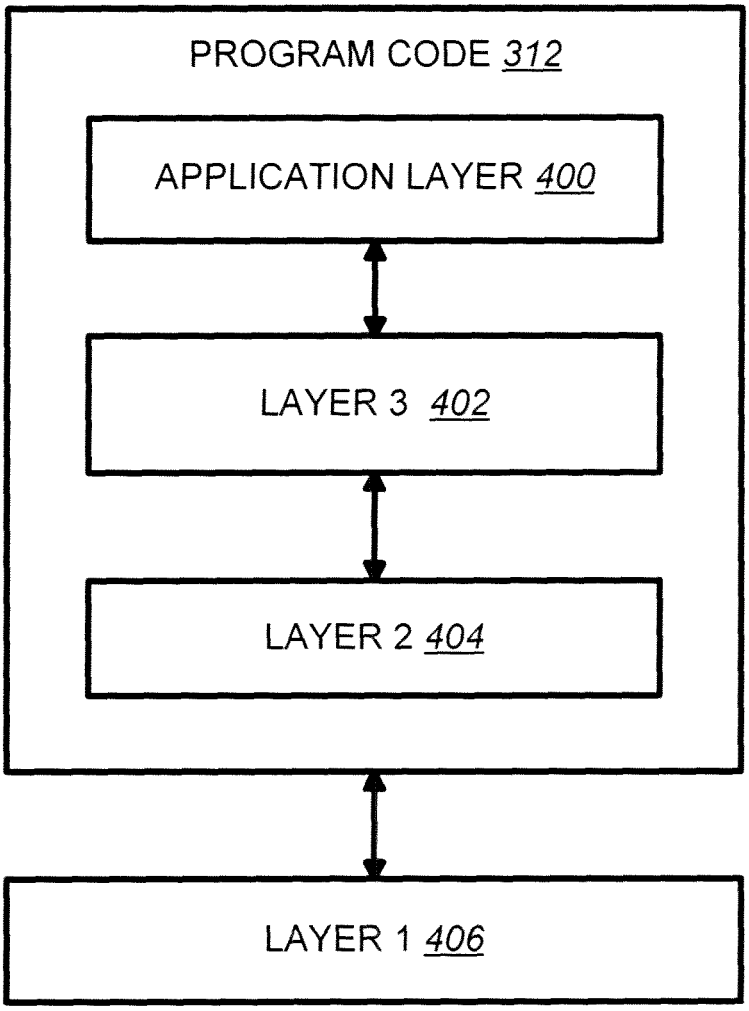
PROGRAM CODE 312
APPLICATION LAYER 400
LAYER 3 402
LAYER 2 404
LAYER 1 406

FIG. 4

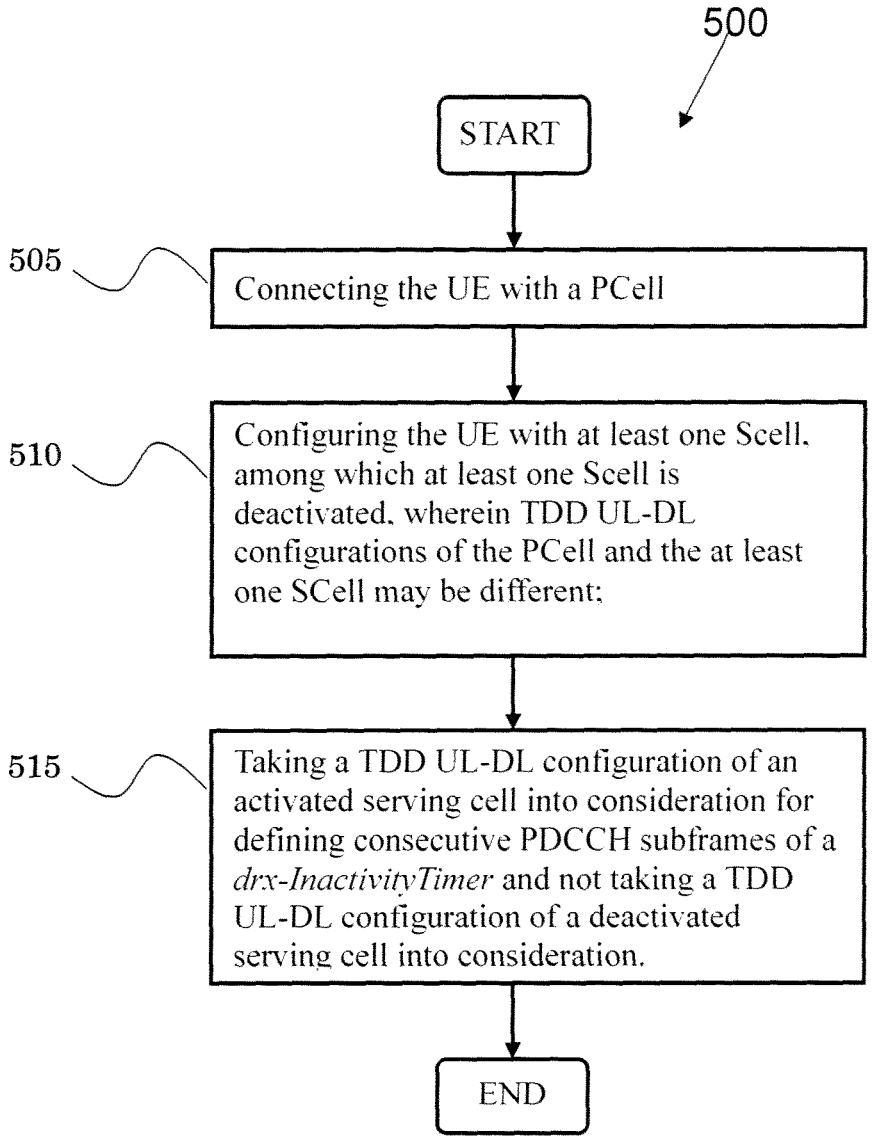
500
START
505
Connecting the UE with a PCell
510
Configuring the UE with at least one Scell, among which at least one Scell is deactivated, wherein TDD UL-DL configurations of the PCell and the at least one SCell may be different;
515
Taking a TDD UL-DL configuration of an activated serving cell into consideration for defining consecutive PDCCH subframes of a drx-InactivityTimer and not taking a TDD UL-DL configuration of a deactivated serving cell into consideration.
END

FIG. 5

METHOD AND APPARATUS TO IMPROVE INTER-BAND CARRIER AGGREGATION (CA) IN TDD (TIME DIVISION DUPLEX) MODE

CROSS-REFERENCE TO RELATED APPLICATIONS

The present Application claims the benefit of U.S. Provisional Patent Application Ser. No. 61/489,003 filed on May 23, 2011, the entire disclosure of which is incorporated herein by reference. Furthermore, the present application is a continuation-in-part of U.S. patent application Ser. No. 13/464,472 filed on May 4, 2012 claiming the benefit of U.S. Provisional Patent Application Ser. No. 61/483,407 filed on May 6, 2011. The entire disclosure of U.S. patent application Ser. No. 13/464,472 is incorporated herein by reference.

FIELD

This disclosure generally relates to wireless communication networks, and more particularly, to a method and apparatus to improve inter-band carrier aggregation (CA) in TDD (Time Division Duplex) mode.

BACKGROUND

With the rapid rise in demand for communication of large amounts of data to and from mobile communication devices, traditional mobile voice communication networks are evolving into networks that communicate with Internet Protocol (IP) data packets. Such IP data packet communication can provide users of mobile communication devices with voice over IP, multimedia, multicast and on-demand communication services.

An exemplary network structure for which standardization is currently taking place is an Evolved Universal Terrestrial Radio Access Network (E-UTRAN). The E-UTRAN system can provide high data throughput in order to realize the above-noted voice over IP and multimedia services. The E-UTRAN system's standardization work is currently being performed by the 3GPP standards organization. Accordingly, changes to the current body of 3GPP standard are currently being submitted and considered to evolve and finalize the 3GPP standard.

SUMMARY

A method and apparatus are disclosed to improve inter-band carrier aggregation (CA) in a UE (User Equipment) in TDD (Time Division Duplex) mode. In one embodiment, the method includes connecting the UE with a PCell (Primary Serving Cell). The method further includes configuring the UE with at least one SCell (Secondary Serving Cell), among which at least one SCell is deactivated, wherein TDD UL-DL (Uplink-Downlink) configurations of the PCell and the at least one SCell may be different. The method also includes taking a TDD UL-DL configuration of an activated serving cell into consideration for defining consecutive PDCCH (Physical Downlink Control Channel) subframes of a drx-InactivityTimer, and not taking a TDD UL-DL configuration of a deactivated serving cell into consideration.

BRIEF DESCRIPTION OF THE DRAWINGS

FIG. **1** shows a diagram of a wireless communication system according to one exemplary embodiment.

FIG. **2** is a block diagram of a transmitter system (also known as access network) and a receiver system (also known as user equipment or UE) according to one exemplary embodiment.

FIG. **3** is a functional block diagram of a communication system according to one exemplary embodiment.

FIG. **4** is a functional block diagram of the program code of FIG. **3** according to one exemplary embodiment.

FIG. **5** illustrates a flow chart in accordance with one exemplary embodiment.

DETAILED DESCRIPTION

The exemplary wireless communication systems and devices described below employ a wireless communication system, supporting a broadcast service. Wireless communication systems are widely deployed to provide various types of communication such as voice, data, and so on. These systems may be based on code division multiple access (CDMA), time division multiple access (TDMA), orthogonal frequency division multiple access (OFDMA), 3GPP LTE (Long Term Evolution) wireless access, 3GPP LTE-A or LTE-Advanced (Long Term Evolution Advanced), 3GPP2 UMB (Ultra Mobile Broadband). WiMax, or some other modulation techniques.

In particular, the exemplary wireless communication systems devices described below may be designed to support one or more standards such as the standard offered by a consortium named "3rd Generation Partnership Project" referred to herein as 3GPP, including Document Nos. RP-110451. "WID: LTE carrier aggregation enhancements"; TS 36.211 V10.1.0, "E-UTRA Physical channel and modulation"; TS 36.321 V10.1.0. "MAC protocol specification (Release 10)"; and TS 36.331 V10.1.0. "RRC protocol specification (Release 10)". The standards and documents listed above are hereby expressly incorporated herein.

FIG. **1** shows a multiple access wireless communication system according to one embodiment of the invention. An access network **100** (AN) includes multiple antenna groups, one including **104** and **106**, another including **108** and **110**, and an additional including **112** and **114**. In FIG. **1**, only two antennas are shown for each antenna group, however, more or fewer antennas may be utilized for each antenna group. Access terminal **116** (AT) is in communication with antennas **112** and **114**, where antennas **112** and **114** transmit information to access terminal **116** over forward link **120** and receive information from access terminal **116** over reverse link **118**. Access terminal (AT) **122** is in communication with antennas **106** and **108**, where antennas **106** and **108** transmit information to access terminal (AT) **122** over forward link **126** and receive information from access terminal (AT) **122** over reverse link **124**. In a FDD system, communication links **118**, **120**, **124** and **126** may use different frequency for communication. For example, forward link **120** may use a different frequency then that used by reverse link **118**.

Each group of antennas and/or the area in which they are designed to communicate is often referred to as a sector of the access network. In the embodiment, antenna groups each are designed to communicate to access terminals in a sector of the areas covered by access network **100**.

In communication over forward links **120** and **126**, the transmitting antennas of access network **100** may utilize beamforming in order to improve the signal-to-noise ratio of forward links for the different access terminals **116** and **122**.

Also, an access network using beamforming to transmit to access terminals scattered randomly through its coverage causes less interference to access terminals in neighboring cells than an access network transmitting through a single antenna to all its access terminals.

An access network (AN) may be a fixed station or base station used for communicating with the terminals and may also be referred to as an access point, a Node B, a base station, an enhanced base station, an eNodeB, or some other terminology. An access terminal (AT) may also be called user equipment (UE), a wireless communication device, terminal, access terminal or some other terminology.

FIG. **2** is a simplified block diagram of an embodiment of a transmitter system **210** (also known as the access network) and a receiver system **250** (also known as access terminal (AT) or user equipment (UE)) in a MIMO system **200**. At the transmitter system **210**, traffic data for a number of data streams is provided from a data source **212** to a transmit (TX) data processor **214**.

In one embodiment, each data stream is transmitted over a respective transmit antenna. TX data processor **214** formats, codes, and interleaves the traffic data for each data stream based on a particular coding scheme selected for that data stream to provide coded data.

The coded data for each data stream may be multiplexed with pilot data using OFDM techniques. The pilot data is typically a known data pattern that is processed in a known manner and may be used at the receiver system to estimate the channel response. The multiplexed pilot and coded data for each data stream is then modulated (i.e. symbol mapped) based on a particular modulation scheme (e.g. BPSK, QPSK, M-PSK, or M-QAM) selected for that data stream to provide modulation symbols. The data rate, coding, and modulation for each data stream may be determined by instructions performed by processor **230**.

The modulation symbols for all data streams are then provided to a TX MIMO processor **220**, which may further process the modulation symbols (e.g. for OFDM). TX MIMO processor **220** then provides N_T modulation symbol streams to N_T transmitters (TMTR) **222***a* through **222***t*. In certain embodiments, TX MIMO processor **220** applies beamforming weights to the symbols of the data streams and to the antenna from which the symbol is being transmitted.

Each transmitter **222** receives and processes a respective symbol stream to provide one or more analog signals, and further conditions e.g., amplifies, filters, and upconverts) the analog signals to provide a modulated signal suitable for transmission over the MIMO channel. N_T modulated signals from transmitters **222***a* through **222***t* are then transmitted from N_T antennas **224***a* through **224***t*, respectively.

At receiver system **250**, the transmitted modulated signals are received by N_R antennas **252***a* through **252***r* and the received signal from each antenna **252** is provided to a respective receiver (RCVR) **254***a* through **254***r*. Each receiver **254** conditions (e.g. filters, amplifies, and downconverts) a respective received signal, digitizes the conditioned signal to provide samples, and further processes the samples to provide a corresponding "received" symbol stream.

An RX data processor **260** then receives and processes the N_R received symbol streams from N_R receivers **254** based on a particular receiver processing technique to provide N_T "detected" symbol streams. The RX data processor **260** then demodulates, deinterleaves, and decodes each detected symbol stream to recover the traffic data for the data stream. The processing by RX data processor **260** is complementary to that performed by TX MIMO processor **220** and TX data processor **214** at transmitter system **210**.

A processor **270** periodically determines which pre-coding matrix to use (discussed below). Processor **270** formulates a reverse link message comprising a matrix index portion and a rank value portion.

The reverse link message may comprise various types of information regarding the communication link and/or the received data stream. The reverse link message is then processed by a TX data processor **238**, which also receives traffic data for a number of data streams from a data source **236**, modulated by a modulator **280**, conditioned by transmitters **254***a* through **254***r*, and transmitted back to transmitter system **210**.

At transmitter system **210**, the modulated signals from receiver system **250** are received by antennas **224**, conditioned by receivers **222**, demodulated by a demodulator **240**, and processed by a RX data processor **242** to extract the reserve link message transmitted by the receiver system **250**. Processor **230** then determines which pre-coding matrix to use for determining the beamforming weights then processes the extracted message.

Turning to FIG. **3**, this figure shows an alternative simplified functional block diagram of a communication device according to one embodiment of the invention. As shown in FIG. **3**, the communication device **300** in a wireless communication system can be utilized for realizing the UEs (or ATs) **116** and **122** in FIG. **1**, and the wireless communications system is preferably the LTE system. The communication device **300** may include an input device **302**, an output device **304**, a control circuit **306**, a central processing unit (CPU) **308**, a memory **310**, a program code **312**, and a transceiver **314**. The control circuit **306** executes the program code **312** in the memory **310** through the CPU **308**, thereby controlling an operation of the communications device **300**. The communications device **300** can receive signals input by a user through the input device **302**, such as a keyboard or keypad, and can output images and sounds through the output device **304**, such as a monitor or speakers. The transceiver **314** is used to receive and transmit wireless signals, delivering received signals to the control circuit **306**, and outputting signals generated by the control circuit **306** wirelessly.

FIG. **4** is a simplified block diagram of the program code **312** shown in FIG. **3** in accordance with one embodiment of the invention. In this embodiment, the program code **312** includes an application layer **400**, a Layer **3** portion **402**, and a Layer **2** portion **404**, and is coupled to a Layer **1** portion **406**. The Layer **3** portion **402** generally performs radio resource control. The Layer **2** portion **404** generally performs link control. The Layer **1** portion **406** generally performs physical connections.

As discussed in 3GPP RP-110451, a work item (WI) for LTE carrier aggregation (CA) enhancement was agreed at RAN#51 meeting. Two objectives of the WI are:

(i) Support of the use of multiple timing advances in case of LTE uplink carrier aggregation; and

(ii) Support of inter-band carrier aggregation for TDD (Time Division Duplex) DL (Downlink) and UL (Uplink) including different uplink-downlink configurations on different bands.

As discussed in 3GPP TS 36.211, the subframe structures of TDD uplink-downlink configurations are shown in Table 1 below.

TABLE 1

TDD UL-DL configurations											
Uplink-downlink	Downlink-to-Uplink Switch-point	Subframe number									
configuration	periodicity	0	1	2	3	4	5	6	7	8	9
0	5 ms	D	S	U	U	U	D	S	U	U	U
1	5 ms	D	S	U	U	D	D	S	U	U	D
2	5 ms	D	S	U	D	D	D	S	U	D	D
3	10 ms	D	S	U	U	U	D	D	D	D	D
4	10 ms	D	S	U	U	D	D	D	D	D	D
5	10 ms	D	S	U	D	D	D	D	D	D	D
6	5 ms	D	S	U	U	U	D	S	U	U	D

In Table 1 above, for each subframe in a radio frame, "D" denotes the subframe is reserved for downlink transmissions, "U" denotes the subframe is reserved for uplink transmissions, and "S" denotes a special subframe with the three fields DwPTS (Downlink Pilot Time Slot). GP (Guard Period), and UpPTS (Uplink Pilot Time Slot).

Furthermore. Section 3.1 of TS 36.321 discusses discontinuous reception (DRX operation) as follows:

Active Time is time related to DRX operation, during which the UE monitors the PDCCH in PDCCH-subframes.

drx-InactivityTimer specifies the number of consecutive PDCCH-subframe(s) after successfully decoding a PDCCH indicating an initial UL or DL user data transmission for this UE.

drx-RetransmissionTimer specifies the maximum number of consecutive PDCCH-subframe(s) for as soon as a DL retransmission is expected by the UE.

onDurationTimer specifies the number of consecutive PDCCH-subframe(s) at the beginning of a DRX Cycle.

PDCCH-subframe refers to a subframe with PDCCH (Physical Downlink Control Channel) or, for an RN (Relay Node) with R-PDCCH (Reverse Packet Data Control Channel) configured and not suspended, to a subframe with R-PDCCH. For FDD UE operation, this represents any subframe; for TDD, only downlink subframes and subframes including DwPTS (Downlink Pilot Time Slot). For RNs with an RN subframe configuration configured and not suspended, in its communication with the E-UTRAN, this represents all downlink subframes configured for RN communication with the E-UTRAN.

U.S. Provisional Patent Application Ser. No. 61/483,487 and U.S. patent application Ser. No. 13/464,472 address an issue related to DRX timers when different TDD UL-DL configurations are aggregated in a UE. In general, the issue is about the definition of consecutive PDCCH-subframes for a DRX timer (e.g. onDurationTimer, drx-InactivityTimer, and drx-RetransmissionTimer). The applications propose several methods for defining consecutive PDCCH-subframes of a DRX timer when only one DRX configuration is being applied for CA. The proposed methods did not consider the activation/deactivation status of a SCell.

In certain cases, it may not be proper to refer to the TDD UL-DL configuration of a deactivated SCell when defining the consecutive PDCCH-subframes for a DRX timer because a UE would not be scheduled in the PDCCH subframes of a deactivated SCell if there is no other activated cell with PDCCH subframes overlapping with PDCCH subframes of the deactivated SCell, according to TS 36.321. Thus, taking TDD UL-DL configuration of a deactivated SCell into consideration may reduce the scheduling opportunities for the UE because the DRX timer is decreased during PDCCH subframes of a deactivated SCell while these PDCCH subframes cannot be scheduled, especially in the case of the drx-InactivityTimer. There is probably no such concern for onDurationTimer and drx-RetransmissionTimer.

As discussed in TS 36.321, the drx-InactivityTimer specifies, in general, the number of consecutive PDCCH-subframes a UE needs to monitor after successfully decoding a PDCCH indicating an initial UL or DL user data transmission for the UE. And, it could be expected that eNB may schedule the UE in any PDCCH subframe of any activated serving cell which is configured with a PDCCH. Thus, it would be reasonable to consider the TDD UL-DL configurations of all activated serving cells with a PDCCH when defining the consecutive PDCCH subframes for the drx-InactivityTimer.

Furthermore, the main purpose of an onDurationTimer is, in general, for UE to monitor PDCCH periodically so that eNB can start a DL transmission after some inactive period, as discussed in TS 36.321. To achieve this purpose, it would be sufficient that onDurationTimer would be defined based on the TDD UL-DL configuration of the PCell. For most of the time only the PCell will remain activated. Thus, this method is simple and sufficient. A potential concern would be that eNB may not be able to send a PDCCH transmission on an activated SCell during the On_Duration period.

Since there is one drx-RetransmissionTimer per HARQ process and different serving cells own different HARQ processes (as discussed in TS 36.321), it would be reasonable for the drx-RetransmissionTimer to refer to the TDD UL-DL configuration of the corresponding serving cell or the scheduling cell of the corresponding serving cell. Furthermore, it would better to stop the drx-RetransmissionTimer when the corresponding serving cell or the scheduling cell of the corresponding serving cell is deactivated.

FIG. **5** illustrates a flow chart **500** in accordance with one exemplary embodiment In step **505**, the UE is being connected with a PCell. In one embodiment, the PCell is always activated. In step **510**, the UE is being configured with one or more SCell. These SCells include at least one SCell that has been deactivated. Furthermore, the TDD UL-DL configurations of the connected PCell and the configured SCell may be different. In one embodiment, the SCell(s) could be activated or deactivated via an Activation/Deactivation MAC (Medium Access Control) control element (CE).

Returning to FIG. **5**, in step **515**, TDD UL-DL configuration(s) of activated serving cell(s) are taken into consideration in defining consecutive PDCCH subframes of a drx-InactivityTimer. However. TDD UL-DL configuration(s) of deactivated serving cell(s) are not taken into consideration. In one embodiment, the activated serving cell(s), which are considered for defining consecutive PDCCH subframes of the drx-InactivityTimer, are configured with a PDCCH. Furthermore, the PDCCH subframes for defining the drx-InactivityTimer are equal to the union of PDCCH subframes of all activated serving cells. In addition, the consecutive PDCCH subframes of a drx-RetransmissionTimer could be defined based on a TDD UL-DL configuration of a serving cell or a scheduling cell of a serving cell which owns the HARQ process associated with the drx-RetransmissionTimer. Furthermore, the dry-RetransmissionTimer is stopped when the corresponding SCell or the corresponding scheduling cell is deactivated. Also, the consecutive PDCCH subframes of an onDurationTimer could be defined based on a TDD UL-DL configuration of the connected PCell.

Referring back to FIGS. **3** and **4**, the UE **300** includes a program code **312** stored in memory **310**. In one embodiment, the CPU **308** could execute the program code **312** to (i)

connect the LIE with a PCell (Primary Serving Cell), (ii) configure the UE with at least one SCell (Secondary Serving Cell), among which at least one SCell is deactivated, wherein TDD UL-DL (Uplink-Downlink) configurations of the PCell and the at least one SCell may be different, and (iii) to take a TDD UL-DL configuration of an activated serving cell into consideration for defining consecutive PDCCH (Physical Downlink Control Channel) subframes of a drx-Inactivity-Timer, and not take a TDD UL-DL configuration of a deactivated serving, cell into consideration.

In addition, the CPU **308** can execute the program code **312** to perform all of the above-described actions and steps or others described herein.

Various aspects of the disclosure have been described above. It should be apparent that the teachings herein may be embodied in a wide variety of forms and that any specific structure, function, or both being disclosed herein is merely representative. Based on the teachings herein one skilled in the art should appreciate that an aspect disclosed herein may be implemented independently of any other aspects and that two or more of these aspects may be combined in various ways. For example, an apparatus may be implemented or a method may be practiced using any number of the aspects set forth herein. In addition, such an apparatus may be implemented or such a method may be practiced using, other structure, functionality, or structure and functionality in addition to or other than one or more of the aspects set forth herein. As an example of some of the above concepts, in some aspects concurrent channels may be established based on pulse repetition frequencies. In some aspects concurrent channels may be established based on pulse position or offsets. In some aspects concurrent channels may be established based on time hopping sequences. In some aspects concurrent channels may be established based on pulse repetition frequencies, pulse positions or offsets, and time hopping sequences.

Those of skill in the art would understand that information and signals may be represented using any of a variety of different technologies and techniques. For example, data, instructions, commands, information, signals, bits, symbols, and chips that may be referenced throughout the above description may be represented by voltages, currents, electromagnetic waves, magnetic fields or particles, optical fields or particles, or any combination thereof.

Those of skill would further appreciate that the various illustrative logical blocks, modules, processors, means, circuits, and algorithm steps described in connection with the aspects disclosed herein may be implemented as electronic hardware (e.g., a digital implementation, an analog implementation, or a combination of the two, which may be designed using source coding or some other technique), various forms of program or design code incorporating instructions (which may be referred to herein, for convenience, as "software" or a "software module"), or combinations of both. To clearly illustrate this interchangeability of hardware and software, various illustrative components, blocks, modules, circuits, and steps have been described above generally in terms of their functionality. Whether such functionality is implemented as hardware or software depends upon the particular application and design constraints imposed on the overall system. Skilled artisans may implement the described functionality in varying ways for each particular application, but such implementation decisions should not be interpreted as causing a departure from the scope of the present disclosure.

In addition, the various illustrative logical blocks, modules, and circuits described in connection with the aspects disclosed herein may be implemented within or performed by an integrated circuit ("IC"), an access terminal, or an access point. The IC may comprise a general purpose processor, a digital signal processor (DSP), an application specific integrated circuit (ASIC), a field programmable gate array (FPGA) or other programmable logic device, discrete gate or transistor logic, discrete hardware components, electrical components, optical components, mechanical components, or any combination thereof designed to perform the functions described herein, and may execute codes or instructions that reside within the IC, outside of the IC, or both. A general purpose processor may be a microprocessor, but in the alternative, the processor may be any conventional processor, controller, microcontroller, or state machine. A processor may also be implemented as a combination of computing devices, e.g. a combination of a DSP and a microprocessor, a plurality of microprocessors, one or more microprocessors in conjunction with a DSP core, or any other such configuration.

It is understood that any specific order or hierarchy of steps in any disclosed process is an example of a sample approach. Based upon design preferences, it is understood that the specific order or hierarchy of steps in the processes may be rearranged while remaining within the scope of the present disclosure. The accompanying method claims present elements of the various steps in a sample order, and are not meant to be limited to the specific order or hierarchy presented.

The steps of a method or algorithm described in connection with the aspects disclosed herein may be embodied directly in hardware, in a software module executed by a processor, or in a combination of the two. A software module (e.g., including executable instructions and related data) and other data may reside in a data memory such as RAM memory, flash memory. ROM memory, EPROM memory, EEPROM memory, registers, a hard disk, a removable disk, a CD-ROM, or any other form of computer-readable storage medium known in the art. A sample storage medium may be coupled to a machine such as, for example, a computer/processor (which may be referred to herein, for convenience, as a "processor") such the processor can read information (e.g. code) from and write information to the storage medium. A sample storage medium may be integral to the processor. The processor and the storage medium may reside in an ASIC. The ASIC may reside in user equipment. In the alternative, the processor and the storage medium may reside as discrete components in user equipment. Moreover, in some aspects any suitable computer-program product may comprise a computer-readable medium comprising codes relating to one or more of the aspects of the disclosure. In some aspects a computer program product may comprise packaging materials.

While the invention has been described in connection with various aspects, it will be understood that the invention is capable of further modifications. This application is intended to cover any variations, uses or adaptation of the invention following, in general, the principles of the invention, and including such departures from the present disclosure as come within the known and customary practice within the art to which the invention pertains.

What is claimed is:

1. A method for inter-band carrier aggregation in a UE (User Equipment) in TDD (Time Division Duplex) mode, comprising:

connecting the UE with a PCell (Primary Serving Cell), wherein the PCell is always activated;

configuring the UE with at least one SCell (Secondary Serving Cell), among which at least one SCell is deactivated, wherein TDD UL-DL (Uplink-Downlink) configurations of the PCell and the at least one SCell are different; and

taking a TDD UL-DL configuration of an activated serving cell into consideration for defining consecutive PDCCH (Physical Downlink Control Channel) subframes of a drx-InactivityTimer, and not taking a TDD UL-DL configuration of a deactivated serving cell into consideration,

wherein there is only one DRX (Discontinuous Reception) configuration applied for the PCell and the at least one SCell,

wherein the activated serving cell refers to the PCell or the SCell that is activated, and the deactivated serving cell refers to the SCell that is deactivated, and

wherein an Activation/Deactivation MAC (Medium Access Control) control element (CE) is used to activate/deactivate the at least one SCell.

2. The method of claim **1**, wherein PDCCH subframes for defining the drx-InactivityTimer are equal to a union of PDCCH subframes of all activated serving cells.

3. The method of claim **1**, wherein the activated serving cell taken into consideration for defining consecutive PDCCH subframes of the drx-InactivityTimer is configured with a PDCCH.

4. The method of claim **1**, further comprising:

defining consecutive PDCCH subframes of an onDurationTimer based on a TDD UL-DL configuration of the PCell.

5. The method of claim **1**, further comprising:

defining consecutive PDCCH subframes of a drx-RetransmissionTimer based on a TDD UL-DL configuration of a serving cell which owns a HARQ process associated with the drx-Retransmission Timer, wherein the serving cell refers to the PCell or an SCell of the at least one SCell.

6. The method of claim **1**, further comprising:

defining consecutive PDCCH subframes of a drx-RetransmissionTimer based on a TDD UL-DL configuration of a scheduling cell of a serving cell which owns a HARQ process associated with the drx-RetransmissionTimer, wherein the serving cell refers to the PCell or a SCell of the at least one SCell.

7. The method of claim **5**, wherein the drx-RetransmissionTimer is stopped when the corresponding SCell is deactivated.

8. The method of claim **6**, wherein the drx-RetransmissionTimer is stopped when the corresponding scheduling cell is deactivated.

9. A communication device for inter-band carrier aggregation in a UE (User Equipment) in TDD (Time Division Duplex) mode, the communication device comprising:

a control circuit;

a processor installed in the control circuit;

a memory installed in the control circuit and coupled to the processor;

wherein the processor is configured to execute a program code stored in memory for inter-band carrier aggregation by:

connecting the UE with a PCell (Primary Serving Cell), wherein the PCell is always activated;

configuring the UE with at least one SCell (Secondary Serving Cell), among which at least one SCell is deactivated, wherein TDD UL-DL (Uplink-Downlink) configurations of the PCell and the at least one SCell are different; and

taking a TDD UL-DL configuration of an activated serving cell into consideration for defining consecutive PDCCH (Physical Downlink Control Channel) subframes of a drx-InactivityTimer, and not taking a TDD UL-DL configuration of a deactivated serving cell into consideration,

wherein there is only one DRX (Discontinuous Reception) configuration applied for the PCell and the at least one SCell,

wherein the activated serving cell refers to the PCell or the SCell that is activated, and the deactivated serving cell refers to the SCell that is deactivated, and

wherein an Activation/Deactivation MAC (Medium Access Control) control element (CE) is used to activate/deactivate the at least one SCell.

10. The communication device of claim **9**, wherein PDCCH subframes for defining the drx-InactivityTimer are equal to a union of PDCCH subframes of all activated serving cells.

11. The communication device of claim **9**, wherein the activated SCell taken into consideration for defining consecutive PDCCH subframes of the drx-InactivityTimer is configured with a PDCCH.

12. The communication device of claim **9**, further comprising:

defining consecutive PDCCH subframes of an onDurationTimer based on a TDD UL-DL configuration of the PCell.

13. The communication device of claim **9**, further comprising:

defining consecutive PDCCH subframes of a drx-RetransmissionTimer based on a TDD UL-DL configuration of a serving cell which owns a HARQ process associated with the drx-RetransmissionTimer, wherein the serving cell refers to the PCell or an SCell of the at least one SCell.

14. The communication device of claim **9**, further comprising:

defining consecutive PDCCH subframes of a drx-RetransmissionTimer based on a TDD UL-DL configuration of a scheduling cell of a serving cell which owns a HARQ process associated with the drx-RetransmissionTimer, wherein the serving cell refers to the PCell or a SCell of the at least one SCell.

15. The communication device of claim **13**, wherein the drx-RetransmissionTimer is stopped when the corresponding SCell is deactivated.

16. The communication device of claim **14**, wherein the drx-RetransmissionTimer is stopped when the corresponding scheduling cell is deactivated.

* * * * *