US009270981B2

(12) **United States Patent**
Park et al.

(10) **Patent No.: US 9,270,981 B2**
(45) **Date of Patent: Feb. 23, 2016**

(54) **APPARATUS AND METHOD FOR ADAPTIVELY RENDERING SUBPIXEL**

(75) Inventors: **Ju Yong Park**, Seoul (KR); **Gee Young Sung**, Suseong-gu (KR); **Dong Kyung Nam**, Yongin-si (KR); **Yun Tae Kim**, Hwaseong-si (KR)

(73) Assignee: **Samsung Electronics Co., Ltd.**, Suwon-si (KR)

(*) Notice: Subject to any disclaimer, the term of this patent is extended or adjusted under 35 U.S.C. 154(b) by 351 days.

(21) Appl. No.: **13/333,368**

(22) Filed: **Dec. 21, 2011**

(65) **Prior Publication Data**

US 2012/0169724 A1 Jul. 5, 2012

(30) **Foreign Application Priority Data**

Dec. 29, 2010 (KR) 10-2010-0137698

(51) **Int. Cl.**
H04N 13/02 (2006.01)
H04N 13/04 (2006.01)
H04N 13/00 (2006.01)

(52) **U.S. Cl.**
CPC ***H04N 13/0484*** (2013.01); ***H04N 13/0011*** (2013.01)

(58) **Field of Classification Search**
CPC H04N 13/0239; H04N 13/0055; H04N 13/0296; H04N 13/0497; H04N 13/0242
USPC 348/46
See application file for complete search history.

(56) **References Cited**

U.S. PATENT DOCUMENTS

2009/0303390	A1*	12/2009	Huang et al.	348/665
2010/0118045	A1*	5/2010	Brown Elliott et al.	345/589
2011/0157159	A1*	6/2011	Chen et al.	345/419
2011/0181587	A1*	7/2011	Nakamura et al.	345/419

FOREIGN PATENT DOCUMENTS

KR	10-2006-0066576	6/2006
KR	10-2008-0004407	1/2008
KR	10-2009-0056655	6/2009
KR	10-2010-0076461	7/2010

* cited by examiner

Primary Examiner — William C Vaughn, Jr.
Assistant Examiner — Daniel Tekle
(74) *Attorney, Agent, or Firm* — NSIP Law

(57) **ABSTRACT**

A rendering apparatus and method in a light field display may determine positions of eyes of a user, may determine a subpixel emitting a ray that enters the eyes, based on the positions of the eyes, among a plurality of subpixels forming a three-dimensional (3D) pixel, and may display a stereoscopic image on the light field display based on a pixel value of the determined subpixel.

28 Claims, 7 Drawing Sheets

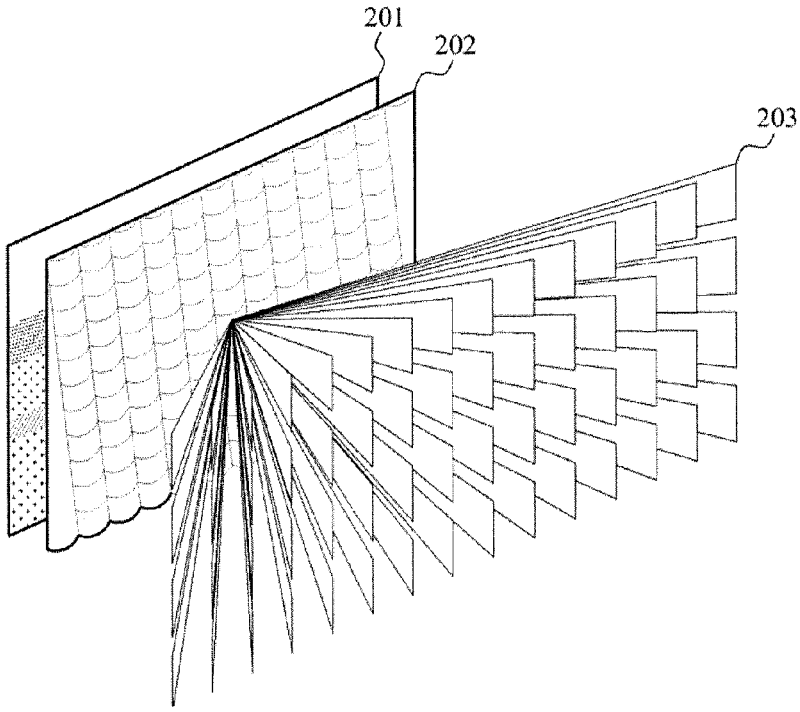

FIG. 1

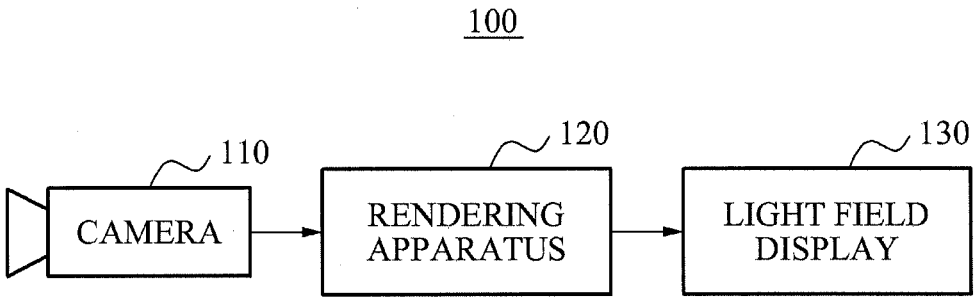
100
110
CAMERA
120
RENDERING APPARATUS
130
LIGHT FIELD DISPLAY

FIG. 2

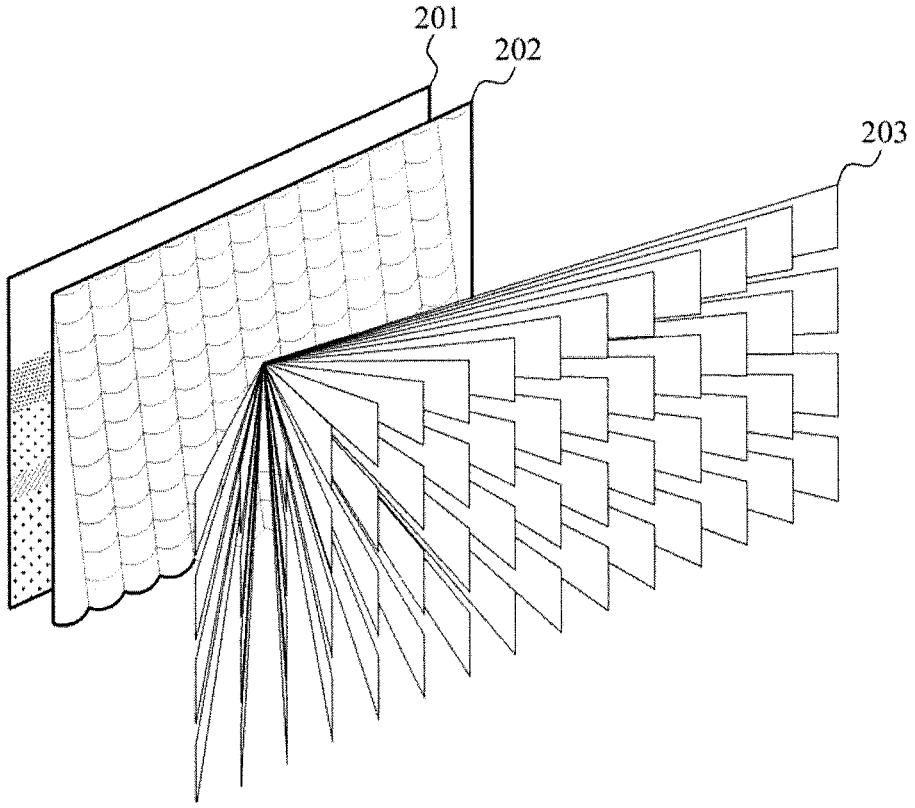

FIG. 3

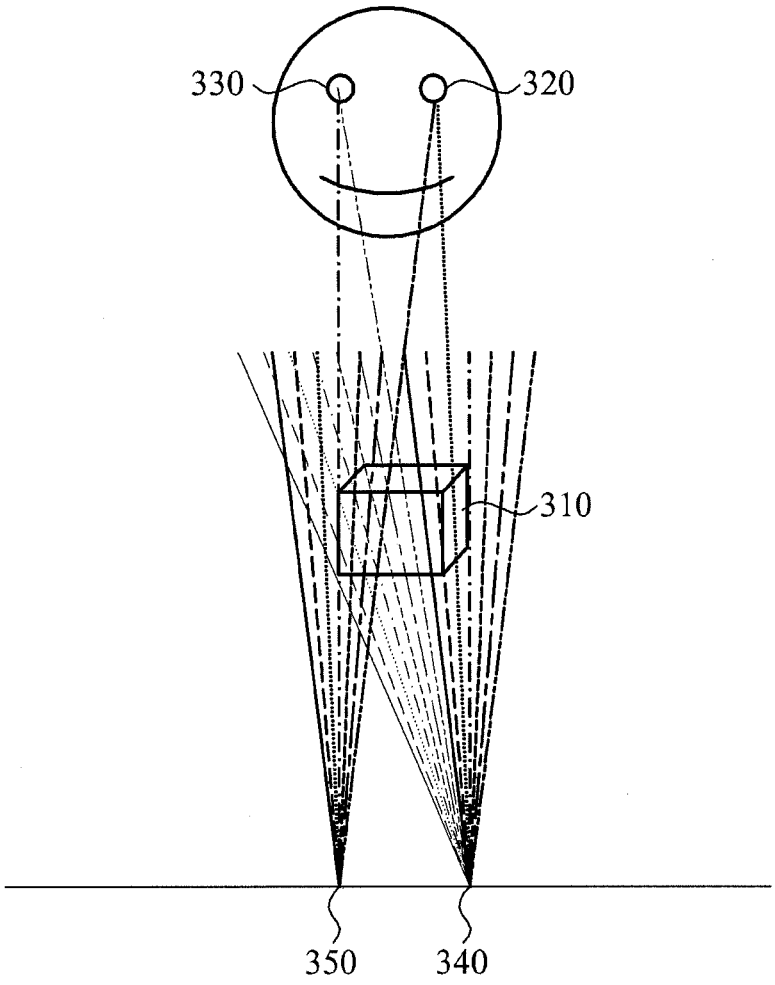

FIG. 4

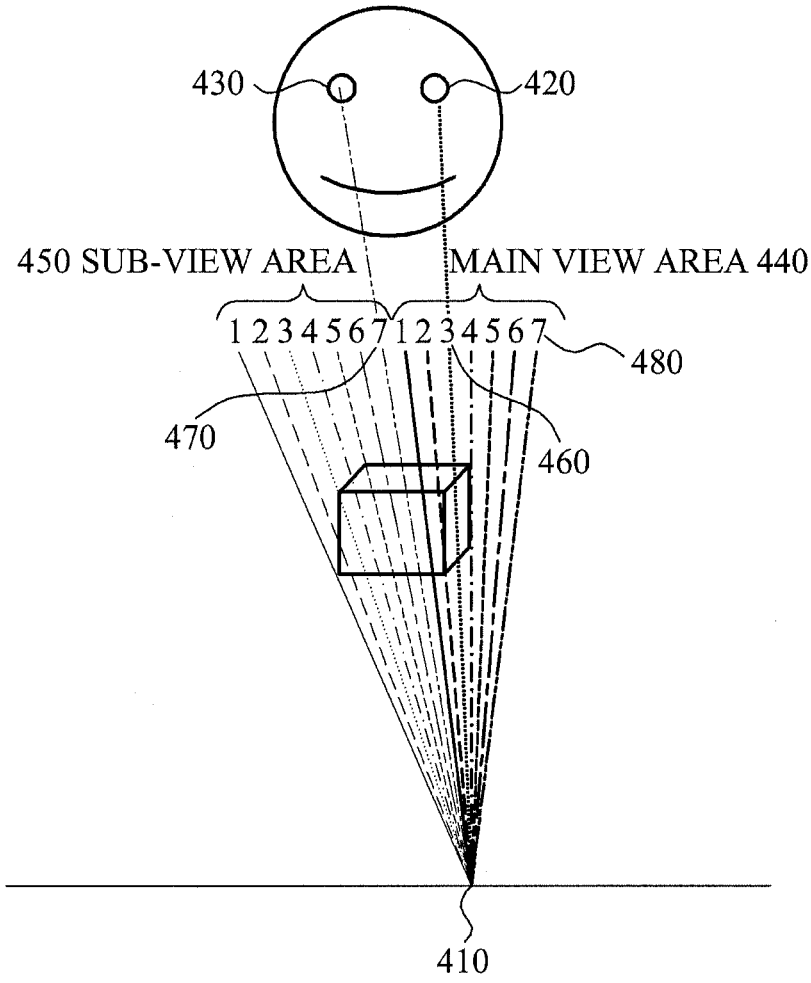
430
420
450 SUB-VIEW AREA
MAIN VIEW AREA 440
1 2 3 4 5 6 7 1 2 3 4 5 6 7
480
470
460
410

FIG. 5

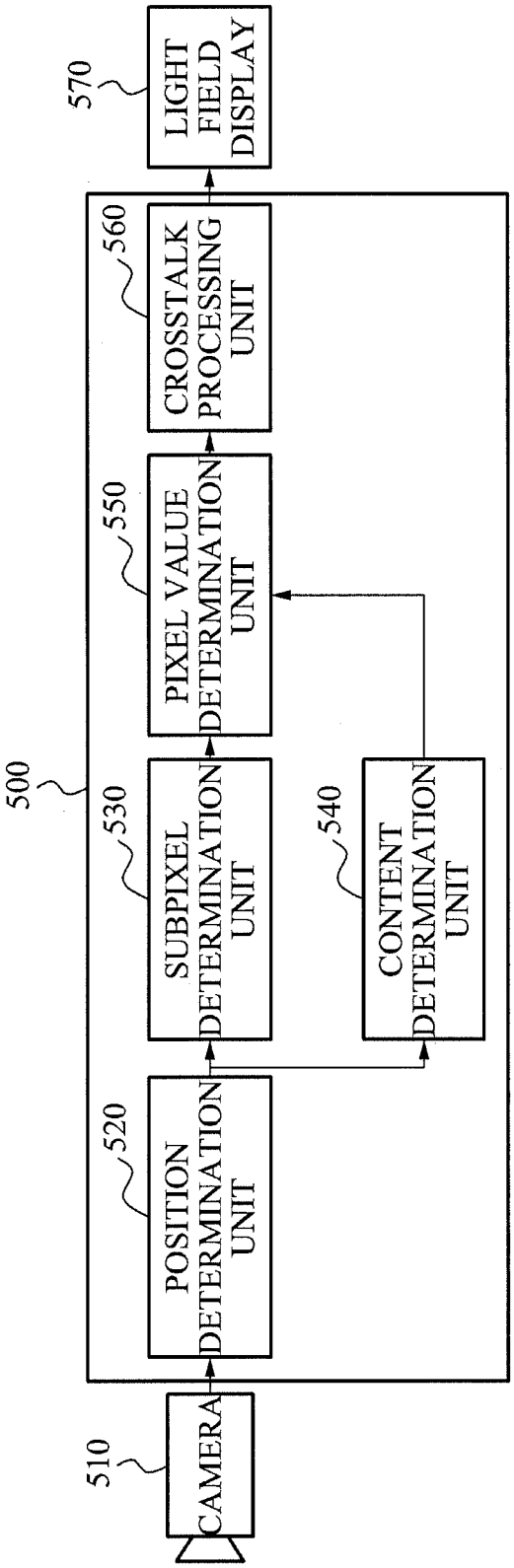
500
510
CAMERA
520
POSITION DETERMINATION UNIT
530
SUBPIXEL DETERMINATION UNIT
540
CONTENT DETERMINATION UNIT
550
PIXEL VALUE DETERMINATION UNIT
560
CROSSTALK PROCESSING UNIT
570
LIGHT FIELD DISPLAY

FIG. 6

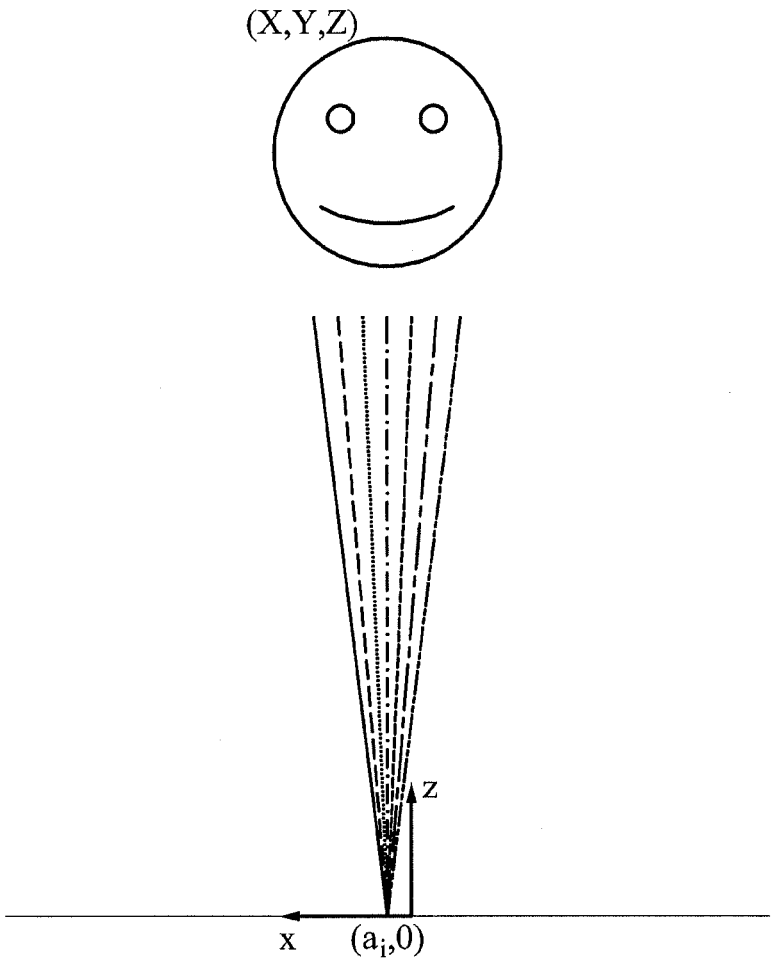

FIG. 7

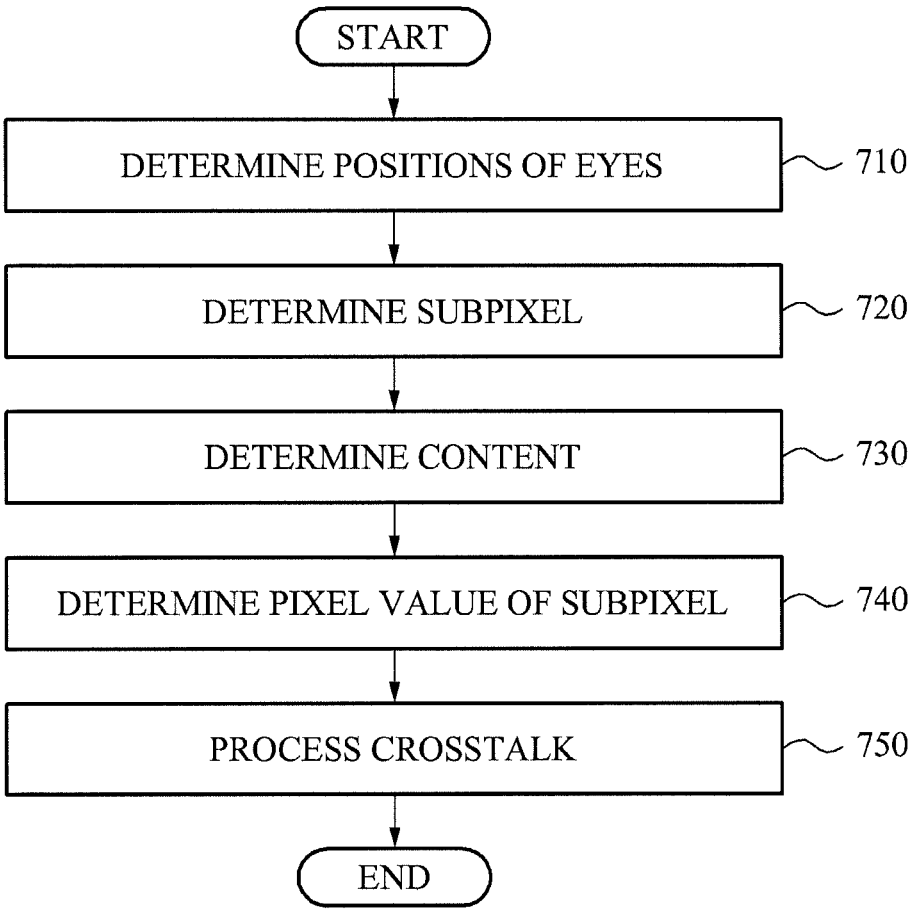
START
DETERMINE POSITIONS OF EYES
710
DETERMINE SUBPIXEL
720
DETERMINE CONTENT
730
DETERMINE PIXEL VALUE OF SUBPIXEL
740
PROCESS CROSSTALK
750
END

APPARATUS AND METHOD FOR ADAPTIVELY RENDERING SUBPIXEL

CROSS-REFERENCE TO RELATED APPLICATIONS

This application claims the priority benefit of Korean Patent Application No. 10-2010-0137698, filed on Dec. 29, 2010, in the Korean Intellectual Property Office, the disclosure of which is incorporated herein by reference.

BACKGROUND

1. Field

Example embodiments of the following description relate to a general display, for example, a television (TV), a monitor, a display of a portable device, a display for advertisement, a display for education, and the like. More particularly, example embodiments of the following description relate to rendering subpixels in a light field display to reproduce and display a stereoscopic image without fatigue when viewing the stereoscopic image.

2. Description of the Related Art

A three-dimensional (3D) image display apparatus may provide different images based on a difference in viewpoint between a left eye and a right eye of a viewer, so that the viewer may feel a 3D effect.

In the 3D image display apparatus, a glass type 3D display process and a glassless type 3D display process exist. The glass type 3D display process may be used to perform filtering on a desired image by using a division using a polarized light, a time sharing, a wavelength division enabling primary colors to have different wavelengths, and the like. Additionally, the glassless type 3D display process may enable each image to be viewed only in a predetermined space using a parallax barrier or lenticular lens.

In particular, the glassless type 3D display process may include, for example, a multi-view process, and a light field process. The light field process may be used to represent lights emitted in different directions from points existing in a predetermined space without any change.

However, in the light field process, it is difficult to represent a stereoscopic image, when rays representing lights in different directions are not sufficiently ensured. Additionally, a resolution may be reduced, as a number of rays is increased.

Further, when a gap between rays is not narrow, that is, is equal to or less than a predetermined level, it is difficult to realize natural motion parallax. However, to widen a view area while maintaining the gap between the rays to be equal to or less than the predetermined level, the number of rays needs to be increased, so that the resolution may be reduced again.

Accordingly, there is a desire for a rendering technique that may widen a view area while preventing a decrease in resolution in a light field display.

SUMMARY

The foregoing and/or other aspects are achieved by providing a subpixel rendering apparatus including a position determination unit to determine positions of eyes of a user, and a subpixel determination unit to determine, based on the positions of the eyes, a subpixel, among a plurality of subpixels forming a three-dimensional (3D) pixel, the subpixel emitting a ray that enters the eyes.

The subpixel rendering apparatus may further include a content determination unit to determine a content based on horizontal direction information and vertical direction information of a virtual line connecting the 3D pixel to the eyes, the content being displayed on a light field display, and a pixel value determination unit to determine a pixel value of the determined subpixel, using the determined subpixel and the determined content.

The subpixel rendering apparatus may further include a crosstalk processing unit to reduce a crosstalk between the determined subpixel and the other subpixels.

The subpixel rendering apparatus may further include at least one camera to capture the positions of the eyes.

The subpixel determination unit may determine the subpixel in parallel for each 3D pixel.

The foregoing and/or other aspects are achieved by providing a subpixel rendering method including determining, by a processor, positions of eyes of a user, and determining, based on the positions of the eyes, a subpixel among a plurality of subpixels forming a 3D pixel, the subpixel emitting a ray that enters the eyes.

The subpixel rendering method may further include determining a content based on horizontal direction information and vertical direction information of a virtual line connecting the 3D pixel to the eyes, the content being displayed on a light field display, and determining a pixel value of the determined subpixel, using the determined subpixel and the determined content.

The subpixel rendering method may further include reducing a crosstalk between the determined subpixel and the other subpixels.

The subpixel rendering method may further include capturing the positions of the eyes using at least one camera.

Additional aspects, features, and/or advantages of example embodiments will be set forth in part in the description which follows and, in part, will be apparent from the description, or may be learned by practice of the disclosure.

BRIEF DESCRIPTION OF THE DRAWINGS

These and/or other aspects and advantages will become apparent and more readily appreciated from the following description of the example embodiments, taken in conjunction with the accompanying drawings of which:

FIG. **1** illustrates a diagram of a light field display system, to explain an overall operation of a rendering apparatus for determining subpixels corresponding to positions of eyes of a user in connection with a camera according to example embodiments;

FIG. **2** illustrates a diagram of a light field display for generating rays in different directions in a three-dimension (3D) according to example embodiments;

FIG. **3** illustrates a diagram of rays that emanates from a 3D pixel to reach both eyes of a user when only a horizontal direction is considered, according to example embodiments;

FIG. **4** illustrates a diagram of a brightness distribution of each view in a 12-view display for each subpixel according to example embodiments;

FIG. **5** illustrates a block diagram of a configuration of a rendering apparatus for displaying a stereoscopic image on a light field display according to example embodiments;

FIG. **6** illustrates a diagram of an operation of calculating a horizontal direction slope and a vertical direction slope according to example embodiments; and

FIG. **7** illustrates a flowchart of a rendering method for displaying a stereoscopic image using a subpixel determined based on positions of eyes of a user according to example embodiments.

DETAILED DESCRIPTION

Reference will now be made in detail to example embodiments, examples of which are illustrated in the accompanying

drawings, wherein like reference numerals refer to the like elements throughout. Example embodiments are described below to explain the present disclosure by referring to the figures.

FIG. **1** illustrates a diagram of a light field display system **100**, to explain an overall operation of a rendering apparatus to determine subpixels corresponding to positions of eyes of a user in connection with a camera according to example embodiments.

Referring to FIG. **1**, the light field display system **100** may include a camera **110**, a rendering apparatus **120**, and a light field display **130**.

The camera **110** may capture positions of eyes of a user that stares the light field display **130**. The camera **110** may include, for example, at least one visible spectrum camera, at least one infrared camera, and at least one depth camera. Additionally, the camera **110** may be inserted into the light field display **130**, or may be detached from or attached to the light field display **130**.

The rendering apparatus **120** may determine position coordinate values of the eyes in a space coordinate, based on the positions of the eyes captured by the camera **110**. Additionally, the rendering apparatus **120** may determine subpixels corresponding to the position coordinate values of the eyes. That is, the rendering apparatus **120** may determine subpixels on the light field display **130** at which the eyes of the user stare.

Additionally, the rendering apparatus **120** may determine a content to be displayed on the light field display **130**, based on the positions of the eyes. Moreover, the rendering apparatus **120** may determine pixel values of the determined subpixels based on the determined content and the determined subpixels. The light field display **130** may generate rays based on the determined pixel values, to display a stereoscopic image.

FIG. **2** illustrates a diagram of a light field display **201** to generate rays in different directions in a three-dimension (3D) according to example embodiments.

Referring to FIG. **2**, the light field display **201** may include a plurality of 3D pixels. Additionally, a single 3D pixel **202** may include a plurality of subpixels **203**.

For example, a single 3D pixel **202** may include "15×4" subpixels **203**. In this example, the 3D pixel may emit rays in "15×4" directions using the "15×4" subpixels. Accordingly, 3D pixels may be collected, and points in 3D space may be displayed on the light field display.

FIG. **3** illustrates a diagram of rays that emanates from a 3D pixel to reach both eyes of a user when only a horizontal direction is considered, according to example embodiments.

In FIG. **3**, when both a left eye **320** and a right eye **330** of the user stare at an object **310**, a 3D pixel **340** corresponding to the left eye **320** may emit rays in different directions. Similarly, a 3D pixel **350** corresponding to the right eye **330** may emit rays in different directions.

As shown in FIG. **4**, based on rays that emanate from a single 3D pixel **410** and that are viewed with a left eye **420** and a right eye **430** of a user, the left eye **420** may exist within a main view area **440**, and the right eye **430** may exist within a sub-view area **450**. Here, in the sub-view area **450**, rays included in the main view area **440** may be repeated.

Accordingly, a rendering apparatus according to example embodiments may individually determine subpixels at which a left eye and a right eye of a user stare, among a plurality of subpixels forming a single 3D pixel, and may display, on a light field display, a natural stereoscopic image using each of the determined subpixels.

Hereinafter, an example of determining subpixels at which eyes of a user stare will be further described with reference to FIG. **5**. In FIG. **5**, a rendering apparatus **500** may individually determine subpixels at which a left eye and a right eye of a user stare. Here, the same process may be used to determine the subpixels at which the left eye and the right eye of the user respectively stare. Accordingly, an example of determining a subpixel at which one of both eyes of a user stares be further described below with reference to FIGS. **5** through **7**.

FIG. **5** illustrates a block diagram of a configuration of the rendering apparatus **500** to display a stereoscopic image on a light field display **570** according to example embodiments.

Referring to FIG. **5**, the rendering apparatus **500** may include a position determination unit **520**, a subpixel determination unit **530**, a content determination unit **540**, pixel value determination unit **550**, and a crosstalk processing unit **560**.

First, a camera **510** may capture a position of an eye of a user, and may transmit the captured position to the rendering apparatus **500**.

For example, the camera **510** may capture a position of an eye of a user that stares at the light field display **570**, and may transmit, to the rendering apparatus **500**, a sensing parameter associated with the captured positions. In this example, at least one camera may be inserted into or attached to the light field display **570**.

The position determination unit **520** may determine the position of the eye based on the sensing parameter received from the camera **510**. For example, the position determination unit **520** may determine, based on the sensing parameter, a position coordinate value (x, y, z) of the eye in a 3D space.

Subsequently, the subpixel determination unit **530** may determine a 3D pixel corresponding to the determined position, among a plurality of 3D pixels that form the light field display **570**.

Additionally, the subpixel determination unit **530** may determine a subpixel that emits a ray to enter the eye, among a plurality of subpixels that form the determined 3D pixel. Here, the subpixel determination unit **530** may determine the subpixel in parallel for each 3D pixel. Accordingly, it is possible to improve an operation speed of the rendering apparatus **500**.

Specifically, the subpixel determination unit **530** may determine the subpixel based on horizontal direction information and vertical direction information of a virtual line connecting the eye to the 3D pixel.

For example, when a slope is used as direction information, the subpixel determination unit **530** may calculate a horizontal direction slope of the virtual line, using a position coordinate of the eye, and a position coordinate of the 3D pixel, as shown in FIG. **6** and the following Equation 1:

$$\alpha_i = \frac{x - a_i}{z} \quad \text{[Equation 1]}$$

In Equation 1 and FIG. **6**, α_i denotes a horizontal direction slope, (x, z) denotes a position coordinate of the eye with respect to a horizontal direction, and $(a_i, 0)$ denotes a position coordinate of the 3D pixel with respect to the horizontal direction.

In the same process, the subpixel determination unit **530** may also calculate a vertical direction slope of the virtual line, using the position coordinate of the eye, and the position coordinate of the 3D pixel, as shown in FIG. **6** and the following Equation 2:

$$\beta_i = \frac{y - b_i}{z} \quad \text{[Equation 2]}$$

In Equation 2 and FIG. **6**, β_i denotes a vertical direction slope, (y, z) denotes a position coordinate of the eye with respect to a vertical direction, and (0, b_i) denotes a position coordinate of the 3D pixel with respect to the vertical direction.

Subsequently, the subpixel determination unit **530** may select a ray having a slope most similar to the horizontal direction slope and the vertical direction slope, from among rays in different directions emitted from the 3D pixel, and may determine a subpixel that emits the selected ray, as a subpixel at which the eye stares. Here, the subpixel determination unit **530** may determine a position coordinate of the determined subpixel.

For example, the subpixel determination unit **530** may determine a position coordinate of a subpixel at which the eye stares, using the following Equation 3:

$$p_i = f_p(\alpha_i, \beta_i) \quad \text{[Equation 3]}$$

In Equation 3, p_i denotes a position coordinate of a subpixel at which the eye stares, α_i denotes a horizontal direction slope, β_i denotes a vertical direction slope, and f_p denotes a function used to determine a subpixel.

For example, when rays in "15×4" directions are emitted from a 3D pixel as shown in FIG. **2**, the subpixel determination unit **530** may select a ray having a slope identical to or most similar to the horizontal direction slope and the vertical direction slope, from among the rays in the "15×4" directions.

In this example, when the selected ray exists in a main view area, the subpixel determination unit **530** may determine a subpixel that emits the selected ray, as a subpixel at which the eye stares, among the plurality of subpixels in the 3D pixel.

Additionally, when the selected ray exists in a sub-view area, the subpixel determination unit **530** may determine a subpixel that emits a ray in a main view area corresponding to the selected ray in the sub-view area, as a subpixel at which the eye stares. For example, as shown in FIG. **4**, when a ray **3 460** emitted to the left eye **420** exists in the main view area **440**, and when a ray **7 470** emitted to the right eye **430** exists in the sub-view area **450**, the subpixel determination unit **530** may determine a subpixel that emits a ray **7 480** in the main view area **440** corresponding to the ray **7 470** in the sub-view area **450**, as a subpixel at which the right eye **430** stares. In other words, the rendering apparatus **500** may display a stereoscopic image at which the right eye **430** stares, using the subpixel emitting the ray **7 480**.

The content determination unit **540** may determine a content to be displayed on the light field display **570**, based on a horizontal direction slope and a vertical direction slope of a virtual line connecting the 3D pixel to the eye. Here, when a stereoscopic image is formed for each content, the content determination unit **540** may determine an index of contents to be displayed on the light field display **570**.

For example, the content determination unit **540** may determine a content using the following Equation 4:

$$c_i = f_c(\alpha_i, \beta_i) \quad \text{[Equation 4]}$$

In Equation 4, c_i denotes an index of contents, α_i denotes a horizontal direction slope, β_i denotes a vertical direction slope, and f_c denotes a function used to determine a subpixel.

The pixel value determination unit **550** may determine a pixel value of the subpixel determined by the subpixel determination unit **530**, using the determined content and the determined subpixel. Here, the pixel value determination unit **550** may individually determine pixel values of subpixels at which the left eye and the right eye of the user respectively stare.

For example, the pixel value determination unit **550** may determine a pixel value of a subpixel using the following Equation 5:

$$V(p_i) = V_C(c_i, p_i) \quad \text{[Equation 5]}$$

In Equation 5, $V(p_i)$ denotes a pixel value of a subpixel at which an eye of a user stares, c_i denotes an index of contents, and p_i denotes a position coordinate of the subpixel at which the eye stares.

In Equation 5, the pixel value determination unit **550** may determine a pixel value corresponding to the position coordinate of the subpixel in the determined content, as a pixel value of a subpixel at which an eye of a user stares.

The determined subpixel may emit a ray based on the pixel value of the subpixel and thus, a stereoscopic image at which the eye stares may be displayed on the light field display **570**.

The crosstalk processing unit **560** may eliminate or reduce crosstalk between the determined subpixel and the other subpixels. Here, the other subpixels may be obtained by excluding the determined subpixel from the plurality of subpixels in the 3D pixel.

For example, the crosstalk processing unit **560** may set pixel values of the other subpixels to "0" and accordingly, the light field display **570** may display the ray emitted from the determined subpixel to the eye, not display rays emitted from the other subpixels. Thus, it is possible to reduce or eliminate a crosstalk that may occur in a microlens array or a barrier array.

FIG. **7** illustrates a flowchart of a rendering method for displaying a stereoscopic image using a subpixel determined based on a position of an eye of a user according to example embodiments.

Referring to FIG. **7**, in operation **710**, the rendering apparatus may determine the position of the eye of the user based on sensing data received from at least one camera.

Specifically, the at least one camera may generate the sensing data by capturing the position of the eye in front of a light field display, and may transmit the sensing data to the rendering apparatus. In response to the sensing data, the rendering apparatus may determine a position coordinate value (x, y, z) of the eye in 3D space. For example, the rendering apparatus may determine a position coordinate value (x_L, y_L, z_L) of the left eye, and a position coordinate value (x_R, y_R, z_R) of the right eye.

In operation **720**, the rendering apparatus may determine, based on the determined position of the eye, a subpixel that emits a ray to enter the eye, among a plurality of subpixels forming a 3D pixel. Specifically, the rendering apparatus may determine the subpixel in parallel for each 3D pixel.

For example, the rendering apparatus may determine a 3D pixel corresponding to the position of the eye among a plurality of 3D pixels that form a light field display. Specifically, the rendering apparatus may determine a position coordinate of the 3D pixel corresponding to the position of the eye. Additionally, the rendering apparatus may calculate a horizontal direction slope of a virtual line based on a position coordinate of the eye of the user and the position coordinate of the 3D pixel, using Equation 1 described above. Subsequently, the rendering apparatus may calculate a vertical direction slope of the virtual line based on the position coordinate of the eye and the position coordinate of the 3D pixel, using Equation 2 described above. Additionally, the rendering apparatus may determine, as a subpixel at which the eye

stares, a subpixel that emits a ray having a slope most similar to the horizontal direction slope and the vertical direction slope, among the plurality of subpixels in the 3D pixel, using Equation 4 described above. In other words, the rendering apparatus may determine a position coordinate of the subpixel at which the eye stares.

In operation **730**, the rendering apparatus may determine a content to be displayed on the light field display, based on horizontal direction information and vertical direction information. For example, the rendering apparatus may determine the content using Equation 4 described above.

In operation **740**, the rendering apparatus may determine a pixel value of the determined subpixel, using the determined subpixel and the determined content. For example, the rendering apparatus may determine the pixel value of the subpixel using Equation 5 described above.

In operation **750**, the rendering apparatus may process, namely, eliminate or reduce a crosstalk between the determined subpixel and the other subpixels, among the plurality of subpixels in the 3D pixel. Here, the other subpixels may be obtained by excluding the determined subpixel from the plurality of subpixels.

For example, the rendering apparatus may set pixel values of the other subpixels to "0" and accordingly, the light field display may display the ray emitted from the determined subpixel to the eye, not display rays emitted from the other subpixels.

Operations **720** through **750** of FIG. **7** may be performed in parallel for each 3D pixel.

For example, when a light field display has a size of "1920×1080", and when a 3D pixel has a size of "10×10", the rendering apparatus may determine, in parallel for each 3D pixel, subpixels emitting rays to enter both eyes of a user, using "192×108" operation processes. Additionally, a rendering apparatus may play back a stereoscopic image on a light field display, based on pixel values of the determined subpixels. Thus, the rendering apparatus may quickly play back the stereoscopic image by reducing an operation time.

In the rendering apparatus and method described above with reference to FIGS. **5** through **7**, subpixels at which a right eye and a left eye of a user respectively stare may be individually determined using Equations 1 and 2. Thus, it is possible to display a stereoscopic image on a light field display using rays emitted from the determined subpixels.

As described above, according to example embodiments, it is possible to display a stereoscopic image using subpixels determined based on positions of eyes of a user and thus, it is possible to widen a viewing area while preventing a reduction in resolution.

Additionally, it is possible to eliminate or reduce a crosstalk by preventing display of unnecessary rays that do not enter eyes of a user.

The methods according to the above-described example embodiments may be recorded in non-transitory computer-readable media including program instructions to implement various operations embodied by a computer. The media may also include, alone or in combination with the program instructions, data files, data structures, and the like. The program instructions recorded on the media may be those specially designed and constructed for the purposes of the example embodiments, or they may be of the kind well-known and available to those having skill in the computer software arts.

The embodiments can be implemented in computing hardware (computing apparatus) and/or software, such as (in a non-limiting example) any computer that can store, retrieve, process and/or output data and/or communicate with other computers. The results produced can be displayed on a display of the computing hardware. A program/software implementing the embodiments may be recorded on non-transitory computer-readable media comprising computer-readable recording media. Examples of the computer-readable recording media include a magnetic recording apparatus, an optical disk, a magneto-optical disk, and/or a semiconductor memory (for example, RAM, ROM, etc.). Examples of the magnetic recording apparatus include a hard disk device (HDD), a flexible disk (FD), and a magnetic tape (MT). Examples of the optical disk include a DVD (Digital Versatile Disc), a DVD-RAM, a CD-ROM (Compact Disc-Read Only Memory), and a CD-R (Recordable)/RW.

Further, according to an aspect of the embodiments, any combinations of the described features, functions and/or operations can be provided.

Moreover, the rendering apparatus **500**, as shown in FIG. **5**, may include at least one processor to execute at least one of the above-described units and methods.

Although example embodiments have been shown and described, it would be appreciated by those skilled in the art that changes may be made in these example embodiments without departing from the principles and spirit of the disclosure, the scope of which is defined in the claims and their equivalents.

What is claimed is:

1. A subpixel rendering apparatus, comprising:

a position determination unit configured to determine positions of eyes of a user; and

a subpixel determination unit configured to determine, based on the positions of the eyes, a subpixel, among subpixels forming a three-dimensional (3D) pixel, the subpixel emitting a ray that enters the eyes,

wherein the subpixel determination unit determines the subpixel based on horizontal direction information of a virtual line connecting the 3D pixel to the eyes, and

wherein the horizontal information comprises a horizontal direction slope of the virtual line.

2. The subpixel rendering apparatus of claim **1**, wherein the subpixel determination unit determines the subpixel further based on vertical direction information of a virtual line connecting the 3D pixel to the eyes.

3. The subpixel rendering apparatus of claim **2**, wherein the subpixel determination unit calculates vertical direction slope of the virtual line.

4. The subpixel rendering apparatus of claim **3**, wherein the subpixel determination unit selects a ray having a slope most similar to the horizontal direction slope and the vertical direction slope, from among rays in different directions emitted from the 3D pixel, and determines a subpixel that emits the selected ray, as a subpixel at which the eye stares.

5. The subpixel rendering apparatus of claim **4**, wherein when the selected ray exists in a sub-view area, the subpixel determination unit determines a subpixel that emits a ray in a main view area corresponding to the selected ray in the sub-view area, as a subpixel at which the eye stares.

6. The subpixel rendering apparatus of claim **1**, further comprising:

a content determination unit to determine a content based on horizontal direction information and vertical direction information of a virtual line connecting the 3D pixel to the eyes, the content being displayed on a light field display; and

a pixel value determination unit to determine a pixel value of the determined subpixel, using the determined subpixel and the determined content.

7. The subpixel rendering apparatus of claim 1, further comprising:

at least one camera to capture the positions of the eyes.

8. The subpixel rendering apparatus of claim 7, wherein the camera comprises at least one visible spectrum camera, at least one infrared camera, and at least one depth camera.

9. The subpixel rendering apparatus of claim 7, wherein the position determination unit determines position coordinate values of the eyes in a space coordinate, using the positions of the eyes captured by the at least one camera, and

wherein the subpixel determination unit determines the subpixel based on the determined position coordinate values, in the light field display.

10. The subpixel rendering apparatus of claim 1, wherein the subpixel determination unit determines the subpixel in parallel for each 3D pixel.

11. The subpixel rendering apparatus of claim 1, wherein the subpixel rendering apparatus individually determines subpixels at which a left eye and a right eye of a user stares, among the plurality of subpixels, and displays, on a light field display, a natural stereoscopic image using each of the determined subpixels.

12. The subpixel rendering apparatus of claim 1, further comprising:

a crosstalk processing unit to reduce a crosstalk between the determined subpixel and the other subpixels by controlling pixel values of the other subpixels, the other subpixels comprising at least one subpixel obtained by excluding the determined subpixel from the plurality of subpixels.

13. The subpixel rendering apparatus of claim 1, further comprising:

a display configured to display the ray emitted from the determined subpixel and exclude rays emitted from the other subpixels.

14. A subpixel rendering method, comprising:

determining, by a processor, positions of eyes of a user; and

determining, based on the positions of the eyes, a subpixel among a plurality of subpixels forming a three-dimensional (3D) pixel, the subpixel emitting a ray that enters the eyes,

wherein the determining of the subpixel comprises determining the subpixel based on horizontal direction information of a virtual line connecting the 3D pixel to the eyes, and

wherein the horizontal direction information comprises a horizontal direction slope of the virtual line.

15. The subpixel rendering method of claim 14, wherein the determining of the subpixel comprises determining the subpixel further based on vertical direction information of a virtual line connecting the 3D pixel to the eyes.

16. The subpixel rendering method of claim 15, wherein the determining of the subpixel comprises calculating vertical direction slope of the virtual line.

17. The subpixel rendering method of claim 16, wherein the determining of the subpixel comprises selecting a ray having a slope most similar to the horizontal direction slope and the vertical direction slope, from among rays in different directions emitted from the 3D pixel, and determining a subpixel that emits the selected ray, as a subpixel at which the eye stares.

18. The subpixel rendering method of claim 14, further comprising:

determining a content based on horizontal direction information and vertical direction information of a virtual line connecting the 3D pixel to the eyes, the content being displayed on a light field display; and

determining a pixel value of the determined subpixel, using the determined subpixel and the determined content.

19. The subpixel rendering method of claim 14, further comprising:

capturing the positions of the eyes using at least one camera.

20. The subpixel rendering method of claim 19, wherein the determining of the positions of the eyes comprises determining position coordinate values of the eyes in a space coordinate, using the positions of the eyes captured by the at least one camera, and

wherein the determining of the subpixel comprises determining the subpixel based on the determined position coordinate values, in the light field display.

21. The subpixel rendering method of claim 14, wherein the determining of the subpixel comprises determining the subpixel in parallel for each 3D pixel.

22. A non-transitory computer readable recording medium storing a program to cause a computer to implement the method of claim 14.

23. A light field display system, comprising:

a camera to capture positions of eyes of a user;

a rendering apparatus comprises:

a position determination unit to determine the positions of eyes of a user using the captured positions of the eyes;

a subpixel determination unit to determine, based on the positions of the eyes, a subpixel, among a plurality of subpixels forming a three-dimensional (3D) pixel, the subpixel emitting a ray that enters the eyes;

a pixel value determination unit to determine a pixel value of the determined subpixel, using the determined subpixel and a stereoscopic image to be displayed on a light field display; and

a light field display to generate rays based on the determined pixel values,

wherein the subpixel determination unit determines the subpixel based on horizontal direction information of a virtual line connecting the 3D pixel to the eyes, and

wherein the horizontal direction information includes a horizontal direction slope of the virtual line.

24. The light field display system of claim 23, wherein the subpixel determination unit determines the subpixel further based on vertical direction information of a virtual line connecting the 3D pixel to the eyes.

25. The light field display system of claim 23, wherein the subpixel determination unit calculates vertical direction slope of the virtual line.

26. The light field display system of claim 23, wherein the subpixel determination unit selects a ray having a slope most similar to the horizontal direction slope and the vertical direction slope, from among rays in different directions emitted from the 3D pixel, and determines a subpixel that emits the selected ray, as a subpixel at which the eye stares.

27. The light field display system of claim 23, further comprising:

a content determination unit to determine a stereoscopic image based on horizontal direction information and vertical direction information of a virtual line connecting the 3D pixel to the eyes.

28. The light field display system of claim 23, wherein the camera comprises at least one visible spectrum camera, at least one infrared camera, and at least one depth camera.

* * * * *