US009364281B2

(12) **United States Patent**
Lefler et al.

(10) **Patent No.: US 9,364,281 B2**
(45) **Date of Patent: Jun. 14, 2016**

(54) **METHODS FOR TREATING THE THORACIC REGION OF A PATIENT'S BODY**

(75) Inventors: **Amy Lefler**, Orangeville (CA); **Neil Godara**, Milton (CA); **Robert Harrison**, Milton (CA)

(73) Assignee: **Avent, Inc.**, Alpharetta, GA (US)

(*) Notice: Subject to any disclaimer, the term of this patent is extended or adjusted under 35 U.S.C. 154(b) by 1658 days.

(21) Appl. No.: **12/199,572**

(22) Filed: **Aug. 27, 2008**

(65) **Prior Publication Data**

US 2009/0054962 A1 Feb. 26, 2009

Related U.S. Application Data

(63) Continuation-in-part of application No. 12/176,035, filed on Jul. 18, 2008, now abandoned, which is a continuation-in-part of application No. 11/457,697, filed on Jul. 14, 2006, which is a continuation-in-part of application No. 11/105,527, filed on Apr. 14, 2005, now Pat. No. 8,882,755, and a continuation-in-part of

(Continued)

(51) **Int. Cl.**

A61B 18/12	(2006.01)
A61B 18/14	(2006.01)
A61B 18/00	(2006.01)

(52) **U.S. Cl.**

CPC ... ***A61B 18/1482*** (2013.01); *A61B 2018/00023* (2013.01); *A61B 2018/0044* (2013.01); *A61B 2018/00083* (2013.01); *A61B 2018/00196* (2013.01); *A61B 2018/00434* (2013.01); *A61B 2018/00791* (2013.01); *A61B 2018/1497* (2013.01); *A61B 2218/002* (2013.01); *A61B 2218/007* (2013.01)

(58) **Field of Classification Search**

CPC A61B 2018/0044; A61B 18/1482; A61B 18/1487

USPC 128/898; 606/20–49

See application file for complete search history.

(56) **References Cited**

U.S. PATENT DOCUMENTS

4,041,931	A	8/1977	Elliott et al.
4,202,349	A	5/1980	Jones
4,257,429	A	3/1981	Dickhudt et al.
4,419,095	A	12/1983	Nebergall et al.
4,447,239	A	5/1984	Krutten
4,548,207	A	10/1985	Reimels
4,612,934	A	9/1986	Borkan
4,657,024	A	4/1987	Coneys
5,191,900	A	3/1993	Mishra

(Continued)

FOREIGN PATENT DOCUMENTS

CA	1160932	1/1984
EP	0547772	6/1993

(Continued)

OTHER PUBLICATIONS

International Search Report (PCT/CA2006/001163)—7 pages.

(Continued)

Primary Examiner — Aaron Roane

(74) *Attorney, Agent, or Firm* — Dority & Manning, P.A.

(57) **ABSTRACT**

A method is disclosed for the treatment of a thoracic region of a patient's body. Embodiments of the method comprise positioning an energy delivery portion of an electrosurgical device to face a segment of a thoracic vertebra at a distance from the segment; and cooling the energy delivery portion and delivering energy through the energy delivery portion.

12 Claims, 20 Drawing Sheets

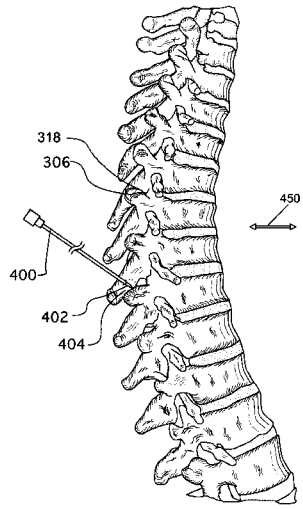

Related U.S. Application Data

application No. 11/105,490, filed on Apr. 14, 2005, now abandoned, and a continuation-in-part of application No. 11/105,524, filed on Apr. 14, 2005, now Pat. No. 7,294,127, said application No. 11/105,527 is a continuation-in-part of application No. 10/087,856, filed on Mar. 5, 2002, now Pat. No. 6,896,675, said application No. 11/105,490 is a continuation-in-part of application No. 10/087,856, said application No. 11/105,524 is a continuation-in-part of application No. 10/087,856, said application No. 11/457,697 is a continuation-in-part of application No. 11/381,783, filed on May 5, 2006, now abandoned, and a continuation-in-part of application No. 10/864,410, filed on Jun. 10, 2004, now Pat. No. 7,163,536, and a continuation-in-part of application No. 11/207,707, filed on Aug. 22, 2005, now abandoned, which is a continuation-in-part of application No. 11/079,318, filed on Mar. 15, 2005, now Pat. No. 7,593,778, which is a continuation-in-part of application No. 10/382,836, filed on Mar. 7, 2003, now abandoned, said application No. 11/207,707 is a continuation-in-part of application No. 11/125,247, filed on May 10, 2005, now Pat. No. 7,306,596, which is a continuation-in-part of application No. 10/853,126, filed on May 26, 2004, now abandoned.

(60) Provisional application No. 60/950,706, filed on Jul. 19, 2007, provisional application No. 60/743,511, filed on Mar. 16, 2006, provisional application No. 60/595,559, filed on Jul. 14, 2005, provisional application No. 60/595,560, filed on Jul. 14, 2005, provisional application No. 60/744,518, filed on Apr. 10, 2006, provisional application No. 60/604,348, filed on Aug. 25, 2004.

(56) **References Cited**

U.S. PATENT DOCUMENTS

5,209,749	A	5/1993	Buelna
5,342,343	A	8/1994	Kitaoka et al.
5,342,357	A	8/1994	Nardella
5,397,338	A	3/1995	Grey et al.
5,429,597	A	7/1995	DeMello et al.
5,429,617	A	7/1995	Hammersmark et al.
5,433,739	A	7/1995	Sluijter et al.
5,545,193	A	8/1996	Fleischman et al.
5,571,147	A	11/1996	Sluijter et al.
5,693,043	A	12/1997	Kittrell et al.
5,759,174	A	6/1998	Fischell et al.
5,766,171	A	6/1998	Silvestrini
5,776,092	A	7/1998	Farin et al.
5,779,642	A	7/1998	Nightengale
5,800,428	A	9/1998	Nelson et al.
5,855,577	A	1/1999	Murphy-Chutorian et al.
5,895,386	A	4/1999	Odell et al.
5,951,546	A	9/1999	Lorentzen
6,002,964	A	12/1999	Feler et al.
6,056,743	A	5/2000	Ellis et al.
6,102,886	A	8/2000	Lundquist et al.
6,104,957	A	8/2000	Alo et al.
6,126,654	A	10/2000	Giba et al.
6,129,726	A	10/2000	Edwards et al.
6,146,380	A	11/2000	Racz et al.
6,176,857	B1	1/2001	Ashley
6,235,000	B1	5/2001	Milo et al.
6,251,104	B1	6/2001	Kesten et al.
6,277,112	B1	8/2001	Underwood et al.
6,280,441	B1	8/2001	Ryan
6,306,132	B1	10/2001	Moorman et al.
6,315,790	B1	11/2001	Gerberding et al.
6,355,033	B1	3/2002	Moorman et al.
6,379,349	B1	4/2002	Müller et al.
6,464,723	B1	10/2002	Callol
6,471,700	B1	10/2002	Burbank et al.
6,478,783	B1	11/2002	Moorehead
6,501,992	B1	12/2002	Belden et al.
6,562,033	B2	5/2003	Shah et al.
6,582,426	B2	6/2003	Moorman et al.
6,620,156	B1	9/2003	Garito et al.
6,622,731	B2	9/2003	Daniel et al.
6,726,684	B1	4/2004	Woloszko et al.
6,735,474	B1	5/2004	Loeb et al.
6,757,565	B2	6/2004	Sharkey
6,770,070	B1	8/2004	Balbierz
6,773,446	B1	8/2004	Dwyer et al.
6,780,181	B2	8/2004	Kroll et al.
6,847,849	B2	1/2005	Mamo et al.
6,893,421	B1	5/2005	Larson et al.
6,902,526	B2	6/2005	Katzman
6,932,811	B2	8/2005	Hooven
6,966,902	B2	11/2005	Tsugita et al.
6,974,454	B2	12/2005	Hooven
7,097,641	B1	8/2006	Arless et al.
7,175,631	B2	2/2007	Wilson et al.
7,462,178	B2	12/2008	Woloszko et al.
2001/0000041	A1	3/2001	Selmon et al.
2001/0027309	A1	10/2001	Elsberry
2001/0032001	A1*	10/2001	Ricart et al. 607/99
2001/0056280	A1	12/2001	Underwood
2002/0026127	A1	2/2002	Balbierz
2002/0032440	A1	3/2002	Hooven
2002/0049437	A1	4/2002	Silvestrini
2002/0072739	A1	6/2002	Lee
2002/0091384	A1	7/2002	Godinho de Queiroz e Melo
2002/0103484	A1	8/2002	Hooven
2002/0120260	A1	8/2002	Morris et al.
2002/0147485	A1	10/2002	Mamo et al.
2002/0188292	A1*	12/2002	Sharkey et al. 606/41
2002/0193781	A1	12/2002	Loeb
2003/0014047	A1	1/2003	Woloszko et al.
2003/0015707	A1	1/2003	Bosco et al.
2003/0023239	A1	1/2003	Burbank et al.
2003/0032936	A1	2/2003	Lederman
2003/0040742	A1	2/2003	Underwood
2003/0093007	A1	5/2003	Wood
2003/0100895	A1	5/2003	Simpson et al.
2003/0109870	A1	6/2003	Lee
2003/0125729	A1	7/2003	Hooven et al.
2003/0153906	A1	8/2003	Sharkey
2003/0158545	A1	8/2003	Hovda et al.
2003/0212394	A1	11/2003	Pearson et al.
2003/0212395	A1	11/2003	Woloszko
2003/0233125	A1	12/2003	Kaplan et al.
2004/0054366	A1	3/2004	Davison et al.
2004/0082942	A1	4/2004	Katzman
2004/0106891	A1	6/2004	Langan et al.
2004/0187875	A1	9/2004	He et al.
2004/0199161	A1	10/2004	Truckai et al.
2004/0215287	A1	10/2004	Swoyer et al.
2004/0249373	A1	12/2004	Gronemeyer et al.
2004/0267203	A1	12/2004	Potter et al.
2004/0267254	A1	12/2004	Manzo
2005/0033372	A1	2/2005	Gerber et al.
2005/0049570	A1	3/2005	Chin et al.
2005/0085806	A1	4/2005	Auge, II et al.
2005/0096718	A1	5/2005	Gerber et al.
2005/0177209	A1	8/2005	Leung et al.
2005/0177211	A1	8/2005	Leung et al.
2005/0187542	A1	8/2005	Auge
2005/0240238	A1	10/2005	Mamo
2006/0020297	A1	1/2006	Gerber et al.
2006/0025763	A1	2/2006	Nelson et al.
2009/0024124	A1*	1/2009	Lefler et al. 606/41

FOREIGN PATENT DOCUMENTS

EP	0642800	3/1995
EP	0651661	6/2000

(56) **References Cited**

FOREIGN PATENT DOCUMENTS

EP	0865768	2/2003
EP	1344497	9/2003
WO	WO 81/03272	11/1981
WO	WO 94/02077	2/1994
WO	WO 94/09560	4/1994
WO	WO 94/22384	10/1994
WO	WO 94/24948	11/1994
WO	WO 95/10318	4/1995
WO	WO 95/10320	4/1995
WO	WO 95/10327	4/1995
WO	WO 95/21578	8/1995
WO	WO 96/39967	12/1996
WO	WO 97/06739	2/1997
WO	WO 97/06855	2/1997
WO	WO 97/24074	7/1997
WO	WO 98/19613	5/1998
WO	WO 98/27879	7/1998
WO	WO 98/31290	7/1998
WO	WO 98/58747	12/1998
WO	WO 99/42037	8/1999
WO	WO 99/43263	9/1999
WO	WO 99/48548	9/1999
WO	WO 01/45579	6/2001
WO	WO 01/67975	9/2001
WO	WO 01/70114	9/2001
WO	WO 01/74251	10/2001
WO	WO 01/80724	11/2001
WO	WO 02/45609	6/2002
WO	WO 03/037162	5/2003
WO	WO 03/065917	8/2003
WO	WO 03/103522	12/2003

OTHER PUBLICATIONS

International Search Report (PCT/CA2006/000229)—4 pages.
Buijs et al., "Radiofrequency Treatment of Sacroiliac Joint-Related Pain Aimed at the First Three Sacral Dorsal Raml: A Minimal Approach", Pain Clinic, 16(2):139-146, 2004.
Jiang et al., "Comparison Between Radiofrequency Coagulation Plus Small Needle Knife and Single Method in Treatment of Sacrolumbar Pain", Chinese Journal of Clinical Rehabilitation, 7(20):2844-2845, 2003.
Plancarte et al., "Radiofrequency Procedures for Sacral and Pelvic Region Pain", Pain Practice 2(3):248-249, 2002.
Fukui et al., "Successful Relief of Hip Joint Pain by Percutaneous Radiofrequency Nerve Thermocoagulation in a Patient with Contraindictions for Hip Arthroplasty", J. Anesth., 15(3):173-175, 2001.
Cohen et al., "Pulsed Radiofrequency as a Treatment for Groin Pain and Orchialgia", Urology, 61(3):645, 2003.
Kawaguchi et al., "Percutaneous Radiofrequency Lesioning of Sensory Branches of the Obturator and Femoral Nerves for the Treatment of Hip Joint Pain", Reg Anesth Pain Med. 26(6):578-581, 2001.
Akatov et al., "Percutaneous Radiofrequency Destruction of the Obturator Nerve for Treatment of Pain Caused by Coxarthrosis", Stereotact Funct Neurosurg. 61(1-4 Pt 2):278-280, 1997.
Ferrante et al., "Radiofrequency Sacroiliac Joint Denervation for Sacroiliac Syndrome", Reg Anesth Pain Med 26(2):137-142, 2001.
Gopalani et al., "A Novel Technique for Treating Nonsurgical Hip Pain with Radiofrequency Lesioning of the Sensory Branches of the Obturator and Femoral Nerves: a Case Report", Archives of Physical Medicine and Rehabilitation, 84(9):E23, 2003.
Pino et al., "Morphologic Analysis of Bipolar Radiofrequency Lesions: Implications for Treatment of the Sacroiliac Joint", Reg Anesth Pain Med. 30(4):335-338, 2005.
Yin et al., "Sensory Stimulatin-Guided Sacroiliac Joint Radiofrequency Neurotomy: Technique Based on Neuroanatomy of the Dorsal Sacral Plexus", Spine, 28(20):2419-2425, 2003.
Ahadian, "Pulsed Radiofrequency Neruotomy: Advances in Pain Medicine", Curr Pain Headache Rep, 8(1):34-40, 2004.
Gevargez et al., "CT-Guided Percutaneous Radiofrequency Denervation of the Sacroiliac Joint", Eur Radiol, 12(6):1360-1365, 2002.
Anis et al., "Use of Radio-Frequency Ablation for the Palliative Treatment of Sacral Chordoma", AJNR, 25(9):1589-1591, 2004.
Conaghan et al., "Sacral Nerve Stimulation can be Successful in Patients with Ultrasound Evidence of External Anal Sphincter Disruption", Diseases of the Colon and Rectum, 48(8):1610-1614, 2005.
Kirsch et al., "Proton Radiotherapy for Hodgkin's Disease in the Sacrum", Lancet Oncology, 6(7):532:533, 2005.
Leng et al., "How Sacral Nerve Stimulation Neuromodulation Works", Ural Clin North Am., 32(1):11-18, 2005.
Kirkham et al., "Neuromodulation Through Sacral Nerve Roots 2 to 4 with a FinetechBrindley Sacral Posterior and Anterior Root Stimulator", Spinal Cord, 40(6):272-281, 2002.
Simon, "Sacroiliac Joint injection and Low Back Pain", Interventional Pain Management, 535-539, 2001.
Kline et al., "Radiofrequency Techniques in Clinical Practice", Interventional Pain Management 243-290, 2001.
Cole et al., "The Sacroiliac Joint: A Functional Approach", Critical Reviews in Physical and Rehabilitation Medicine, 8(1&2):125-152, 1996.
Atlihan et al., "Anatomy of the Anterior Sacroiliac Joint with Reference to Lumbosacral Nerves", Clinical Orthopaedics and Related Research, 376:2360241, 2000.
Calvillo et al., "Anatomy and Pathophysiology of the Sacroiliac Joint", Current Review of Pain, 4:356-261, 2000.
Davies et al., "Radiofrequency Treatment in the United States", Pain Practice 2(3):192-194, 2000.
Ebraheim et al., "Anatomic Considerations for Posterior Approach to the Sacroiliac Joint", Spine, 21(23):2709-2712, 1996.
Fortin et al., "Three Pathways Between the Sacroiliac Joint and Neural Structures", Am J Neuroradiol., 20:1429-1434, 1999.
Fortin et al., "Sacroiliac Joint Innervation and Pain", The American Journal of Orthopedics, 28:68-90, 1999.
Liguoro et al., "The Posterior Sacral Foramina: An Anatomical Study", J. Anat, 195:301-304, 1999.
Murata et al., "Origin and Pathway of Sensory Nerve Fibers to the Ventral and Dorsal Sides of the Sacroiliac Joint in Rats", Journal of Orthopaedic Research, 19:379-383, 2001.
Prithvi et al., "The Current Status of the Practice of Radiofrequency in the World", Pain Practice, 2(3):176-179, 2002.
Slipman et al., "Sacroiliac Joint Syndrome", Pain Physician, 4(2):143-152, 2001.
Van Zundert et al., "Application of Radiofrequency Treatment in Practical Pain Management: State of the Art", Pain Practice, 2(3):269-278, 2002.
Dreyfuss et al., "Lumbar Radiofrequency Neurotomy for Chronic Zygapophyseal Joint Pain: A Pilot Study Using Dual Medial Branch Blocks", ISIS Scientific Newsletter 3(2)13-30, 1999.
Deer, "Injections for the Diagnosis and Treatment of Spinal Pain", American Society of Anesthesiologists 32(Chapter 6):52-69, 2004.
Cohen et al., "Lateral Branch Blocks as a Treatment for Sacroiliac Joint Pain: A Pilot Study", Regional Anesthesia Pain Medicine, 28(2):113-119, 2003.
Bogduk et al., "Technical Limitations to the Efficacy of Radiofrequency Neurotomy for Spinal Pain", Neurosurgery 20(4):529-535, 1987.
Lord et al., "Percutaneous Radiofrequency Neurotomy in the Treatment of Cervical Zygapophyseal Joint Pain: A Caution", Neurosurgery 36(4):732-739, 1995.
Lau at al., "The Surgical Anatomy of Lumbar Medial Branch Neurotomy (Facet Denervation)", Pain Medicine 5(3):289-298, 2004.
Lord et al., "Percutaneous Radio-Frequency Neurotomy for Chronic Cervical Zygapophyseal-Joint Pain", New England Journal of Medicine 335(23):1721-1726, 1996.
Hooten et al., "Radiofrequency Neurotomy for Low Back Pain: Evidence-Based Procedural Guidelines", Pain Medicine 6(2):129-138, 2005.
Dreyfuss et al., "Radiofrequency Neurotomy of the Zygapophyseal and Sacroiliac Joints", Pain Proc, 2 (Chapter 32): 395-420, 2000.
Baylis Medical Company, Inc., "Technology Notes—RF Lesion Size in Relation to Cannula Gauge", 2005.
Baylis Medical Company, Inc., "Baylis Medical Company—Radiopaque Cannula", 2005.

(56) **References Cited**

OTHER PUBLICATIONS

Curatolo et al., "Re: Niemisto L., Kelso E., Malmivaara A., et al. Radiofrequency Denervation for Neck and Back Pain: A Systematic Review Within the Framework of the Cochrane Collaboration Back Review Group. Spine 2003, 28:1877-88", Spine 30(2):263-268, 2005.

Cohen, "Sacroiliac Joint Pain: A Comprehensive Review of Anatomy, Diagnosis, and Treatment", Anesth Analg 101:1440-1453, 2005.

Valleylab—RF Pain Management System, Sep. 16, 2004, http://www.valleylab.com/static/pain/products-generator.html 2.

* cited by examiner

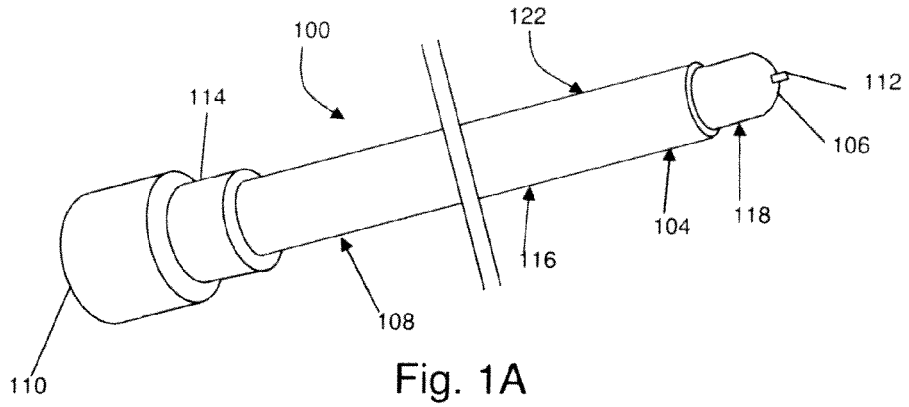

Fig. 1A

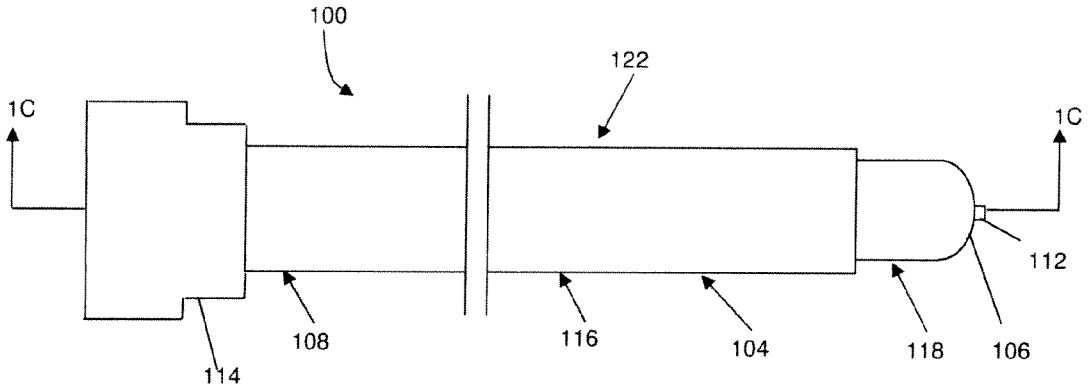

Fig. 1B

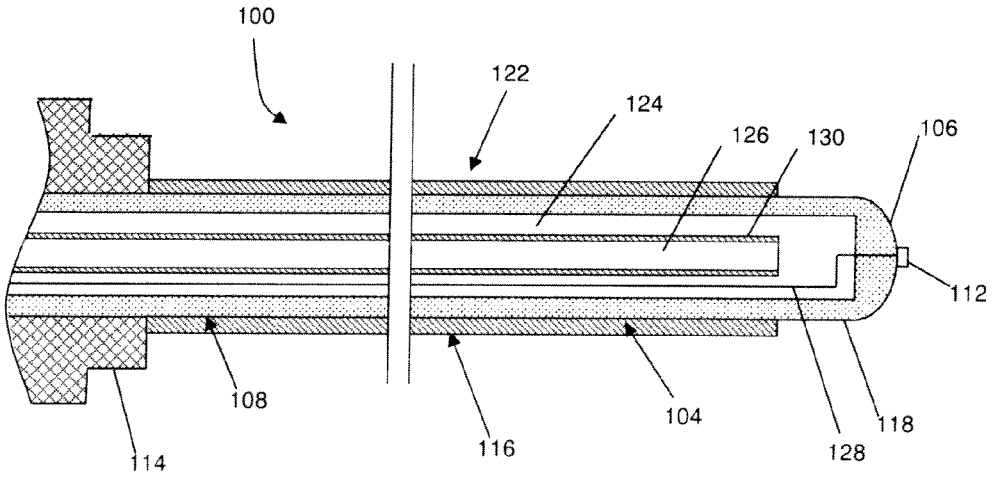

Fig. 1C

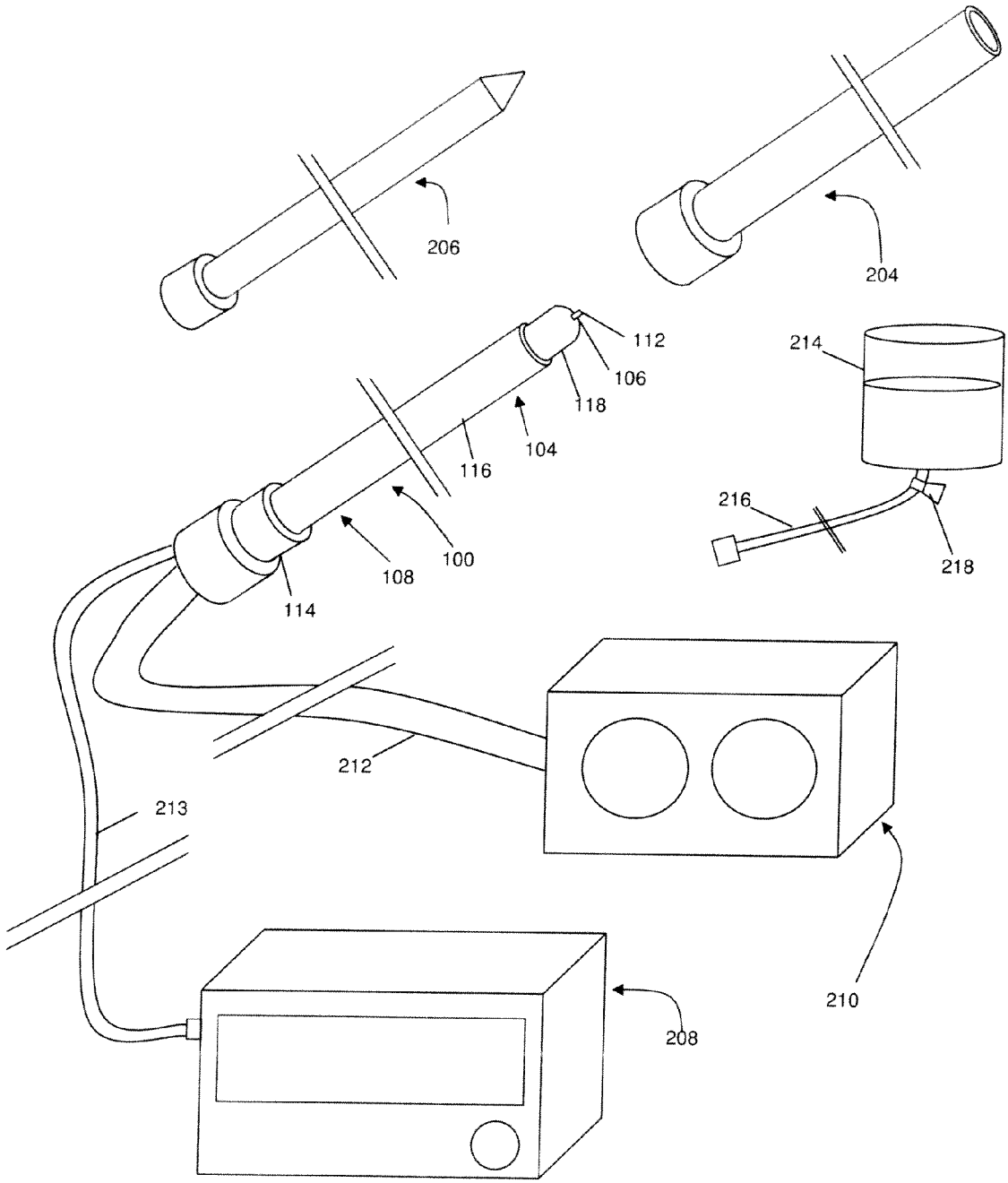
206
204
112
106
118
104
116
100
108
114
214
216
218
212
213
210
208

Fig. 2

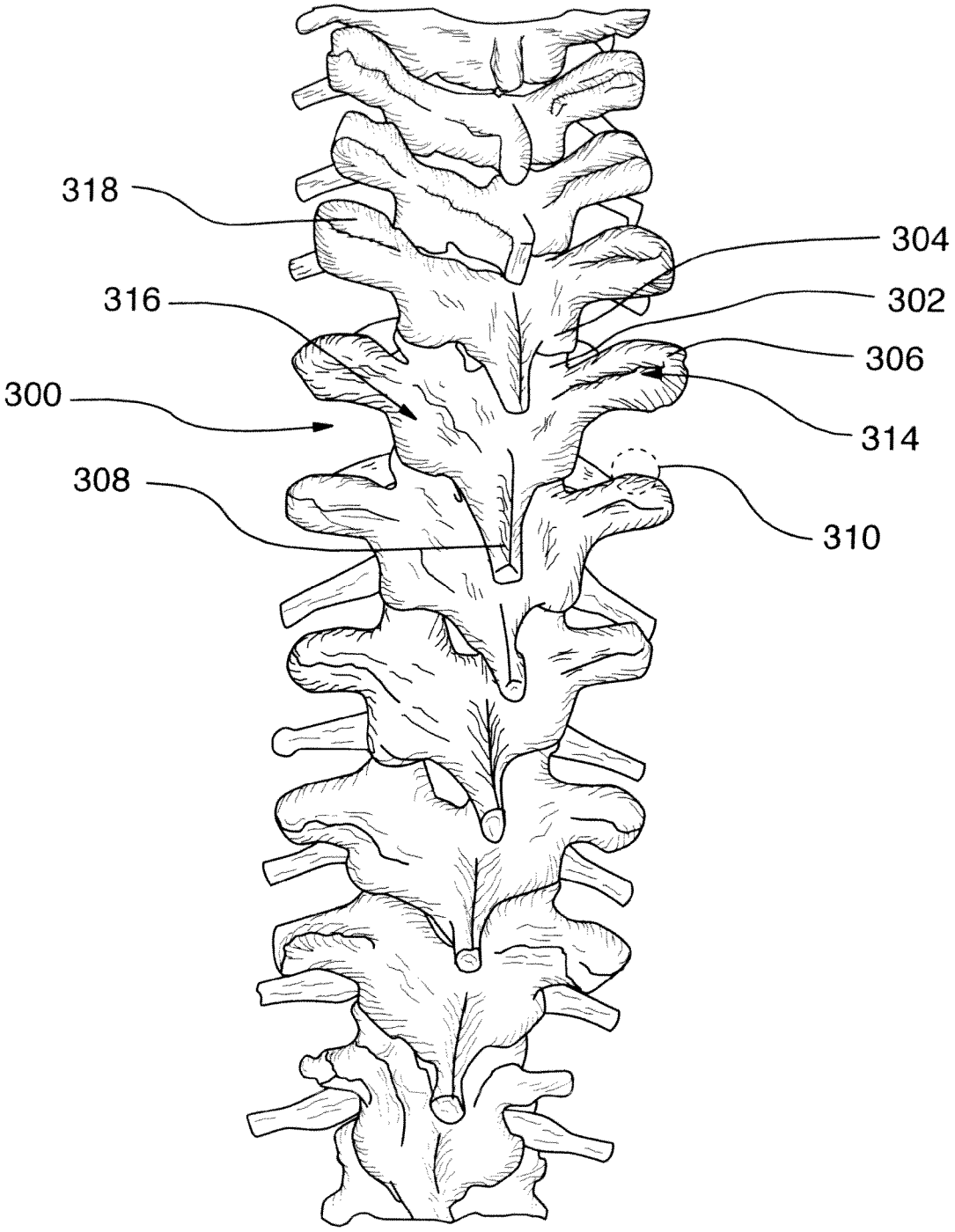

FIG.3A

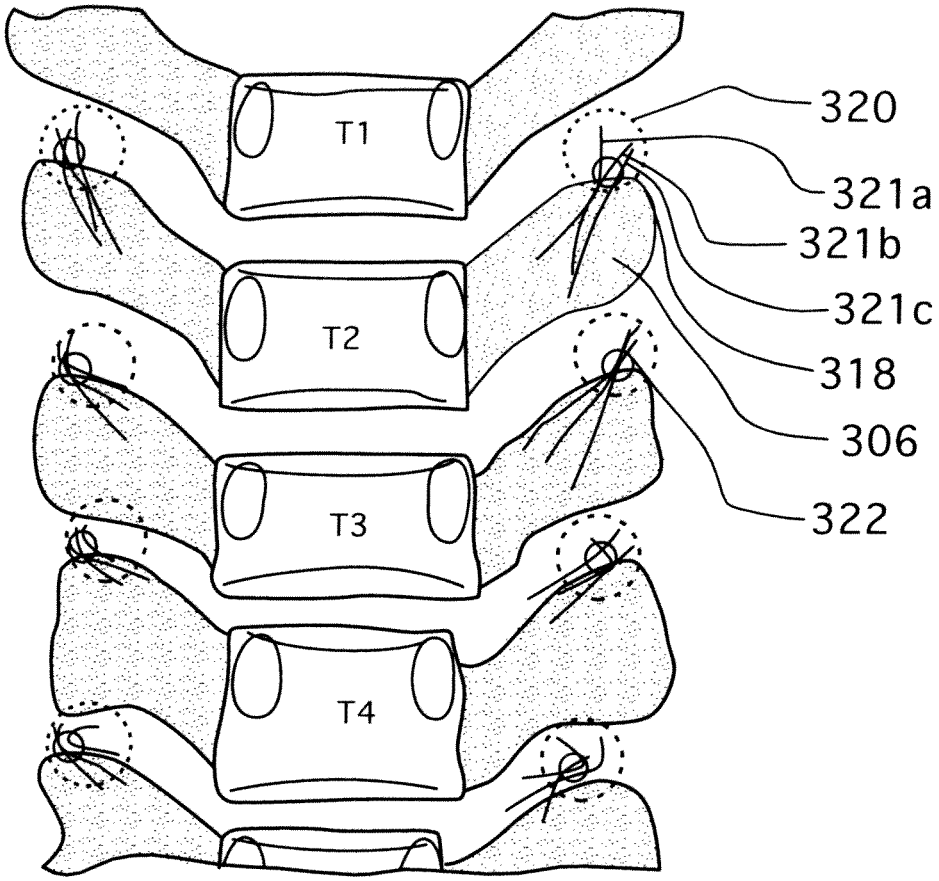

FIG.3B

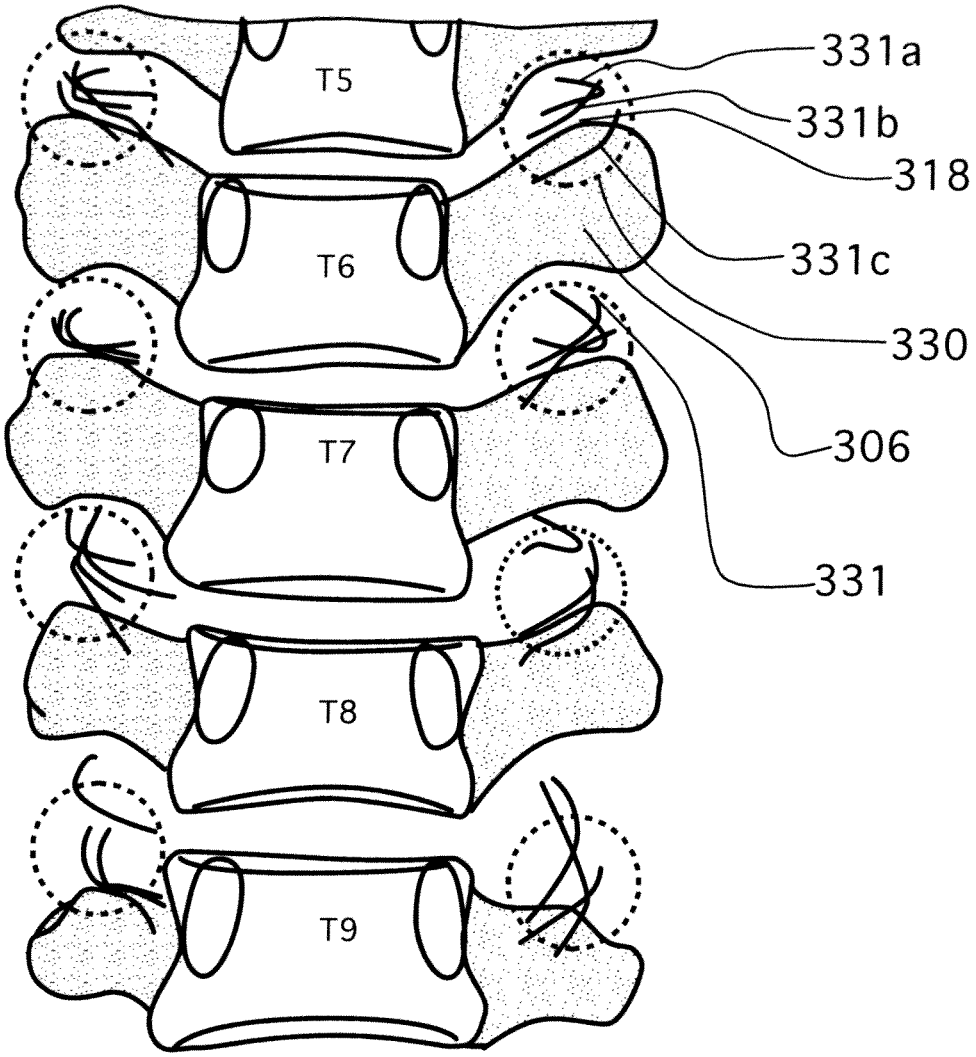

FIG.3C

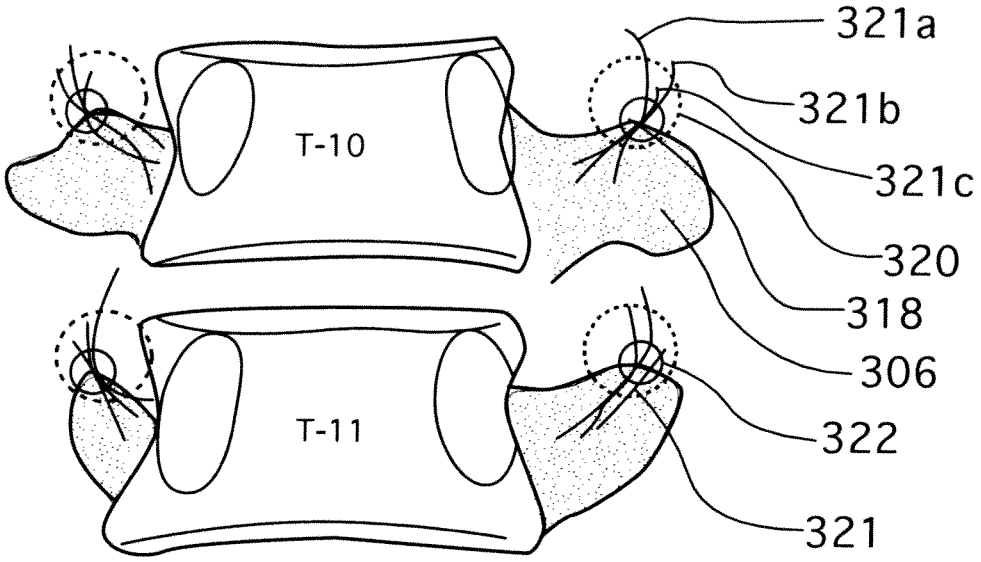

FIG.3D

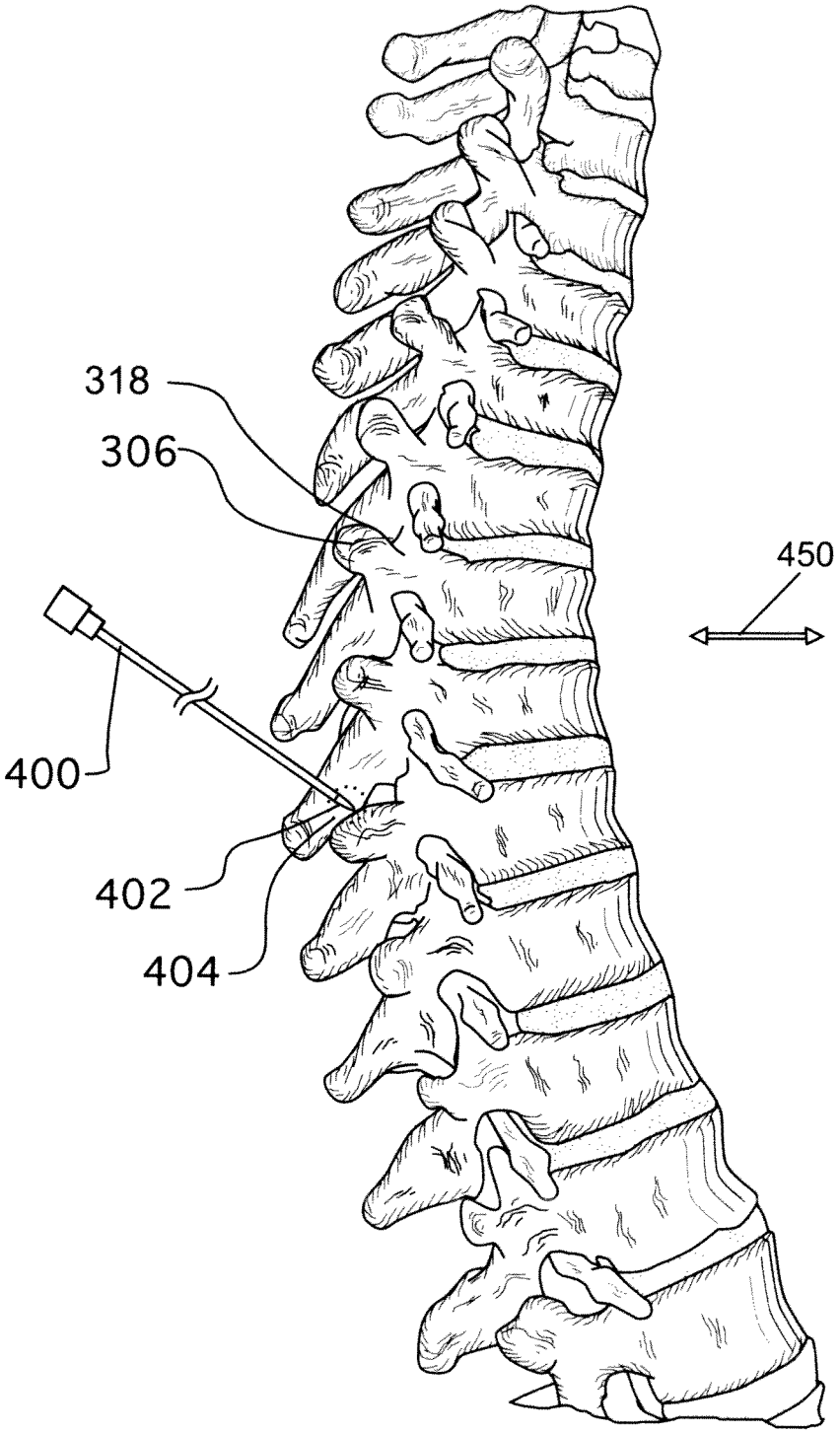

FIG.4

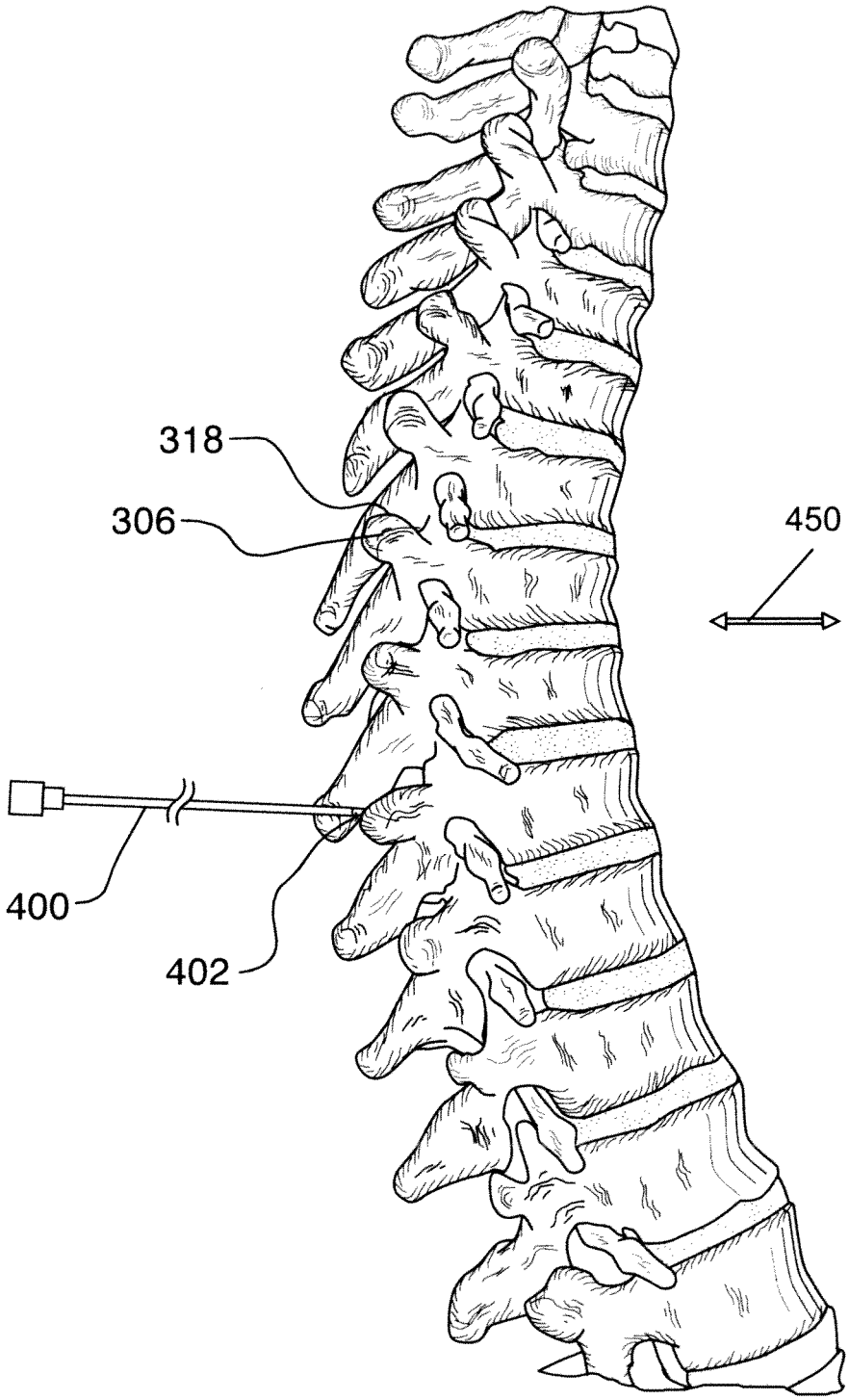

FIG.5A

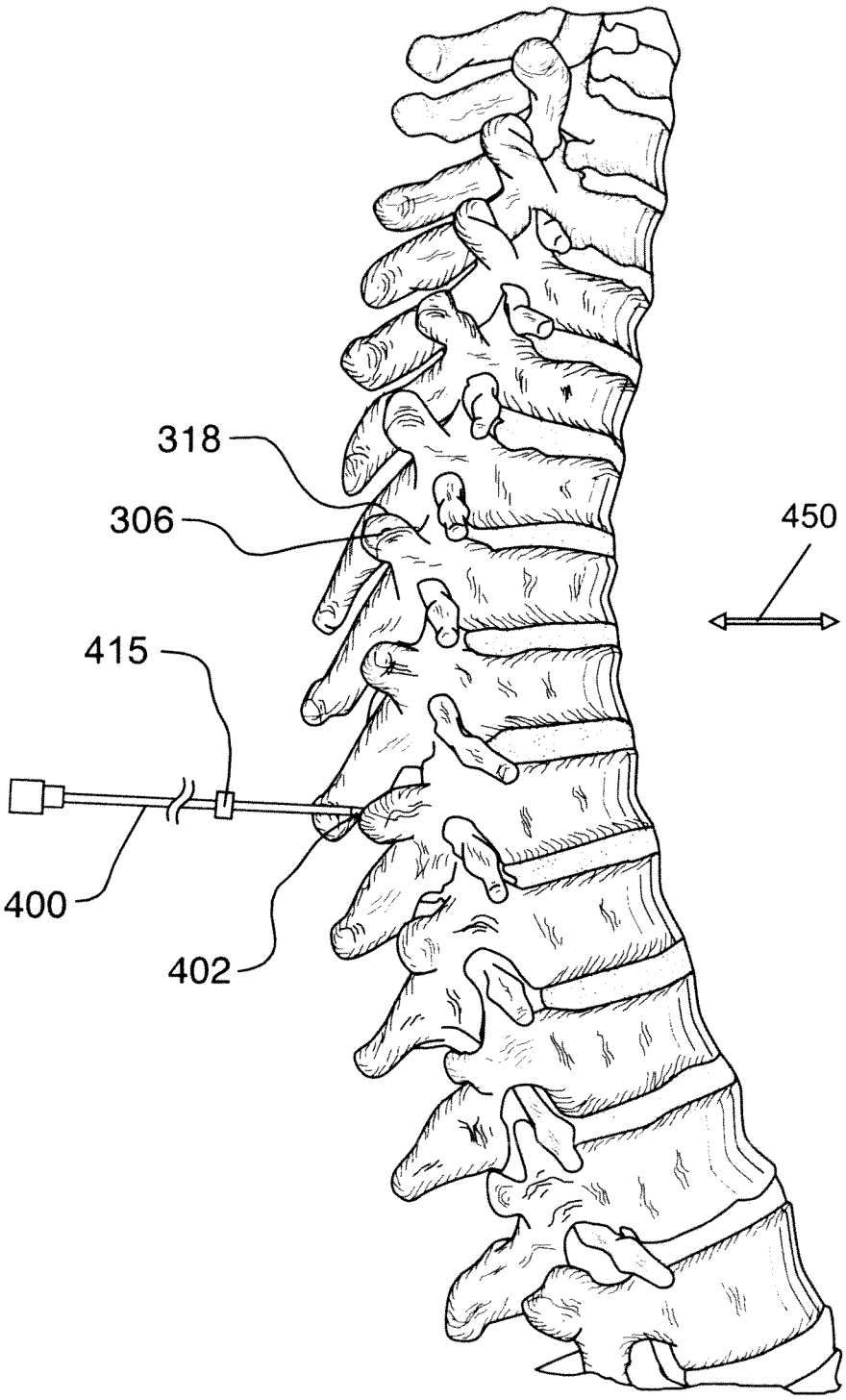

FIG.5B

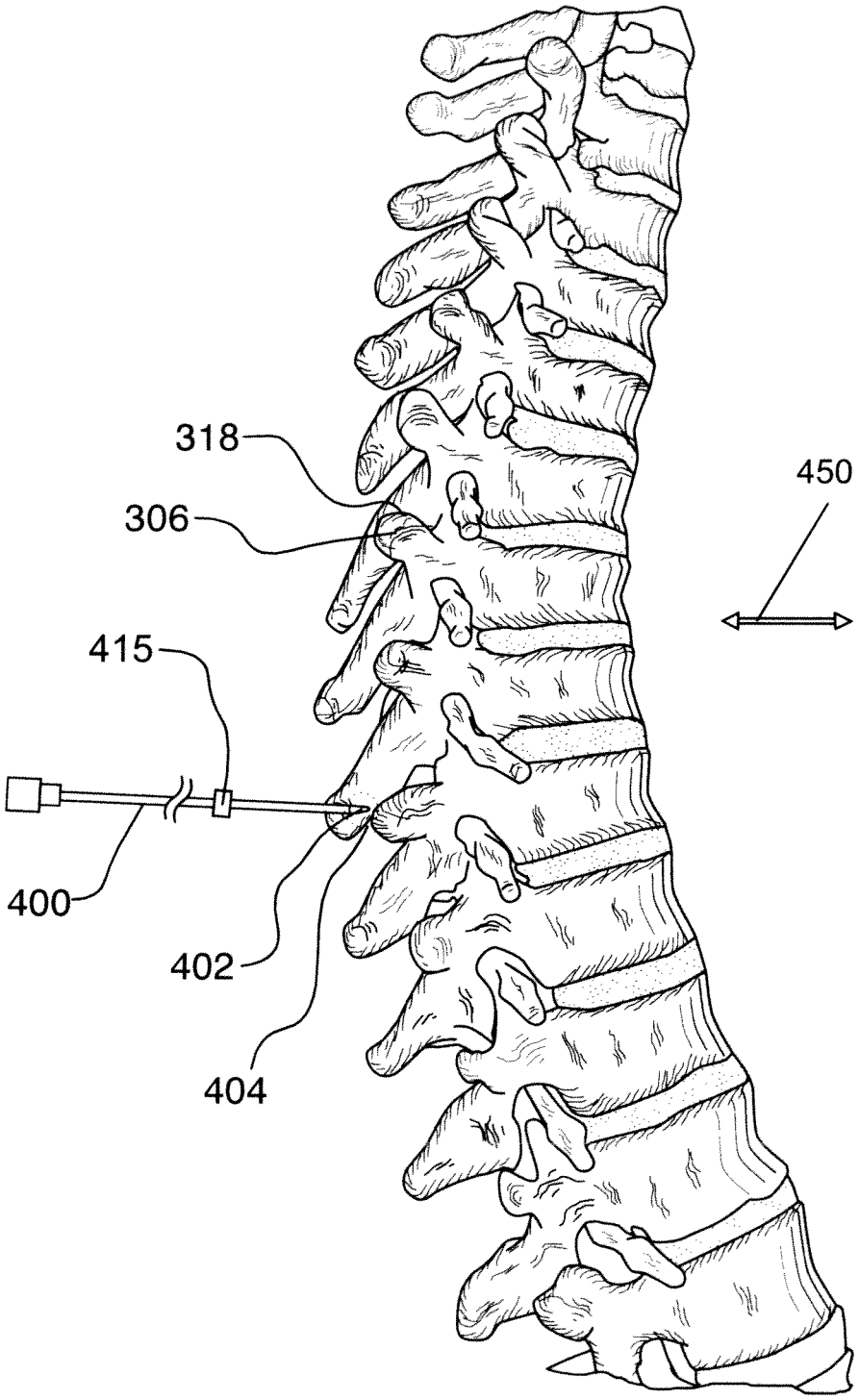

FIG.5C

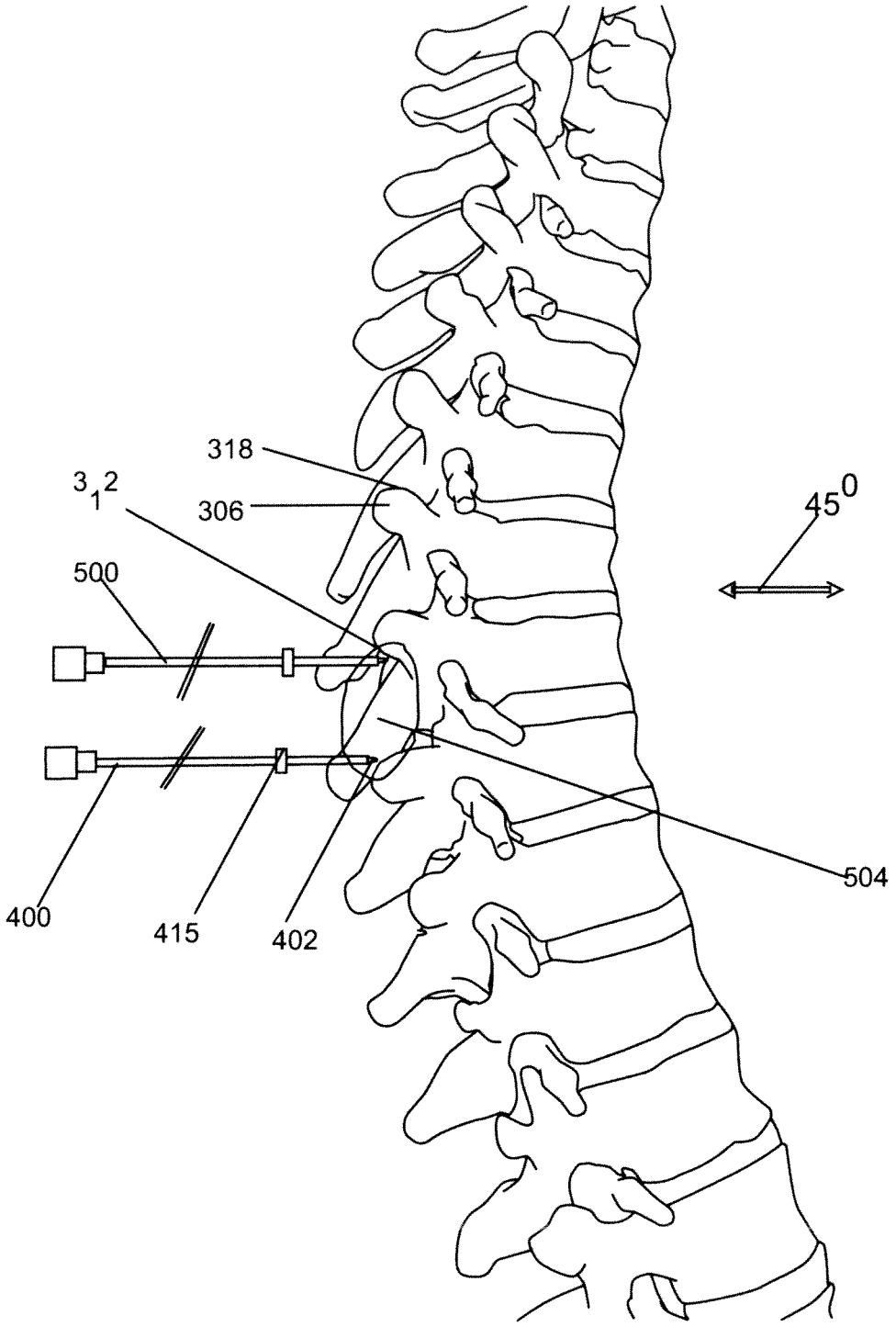

FIG.5D

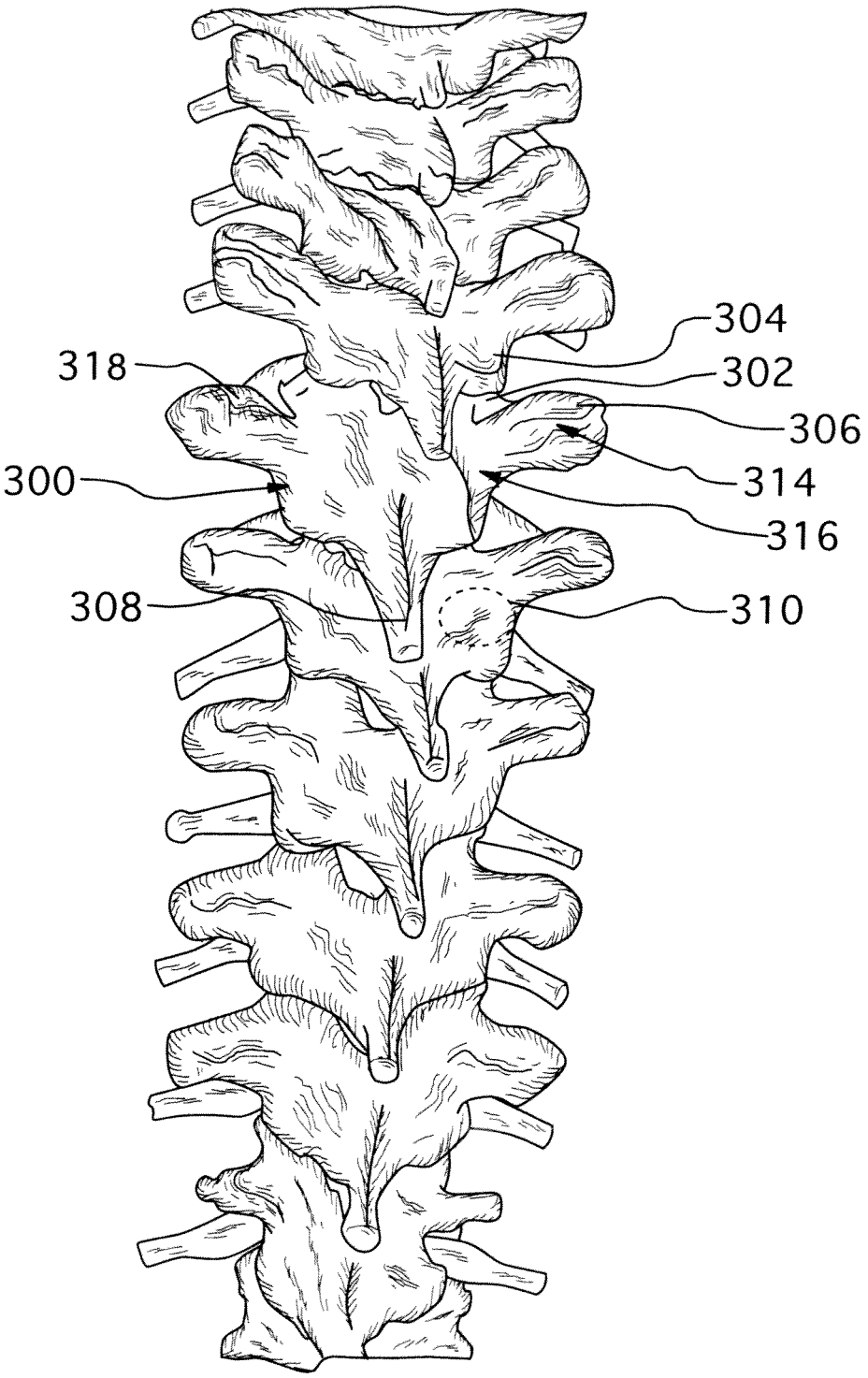

FIG.6

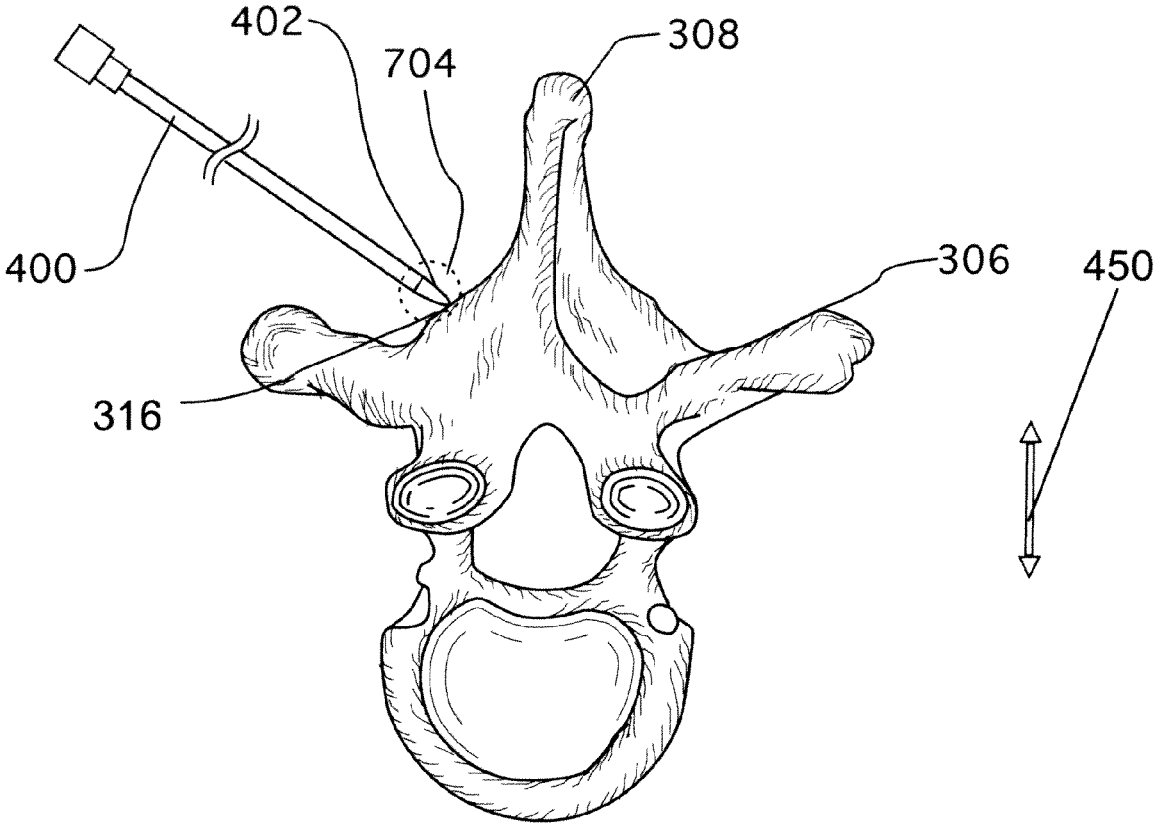

FIG.7

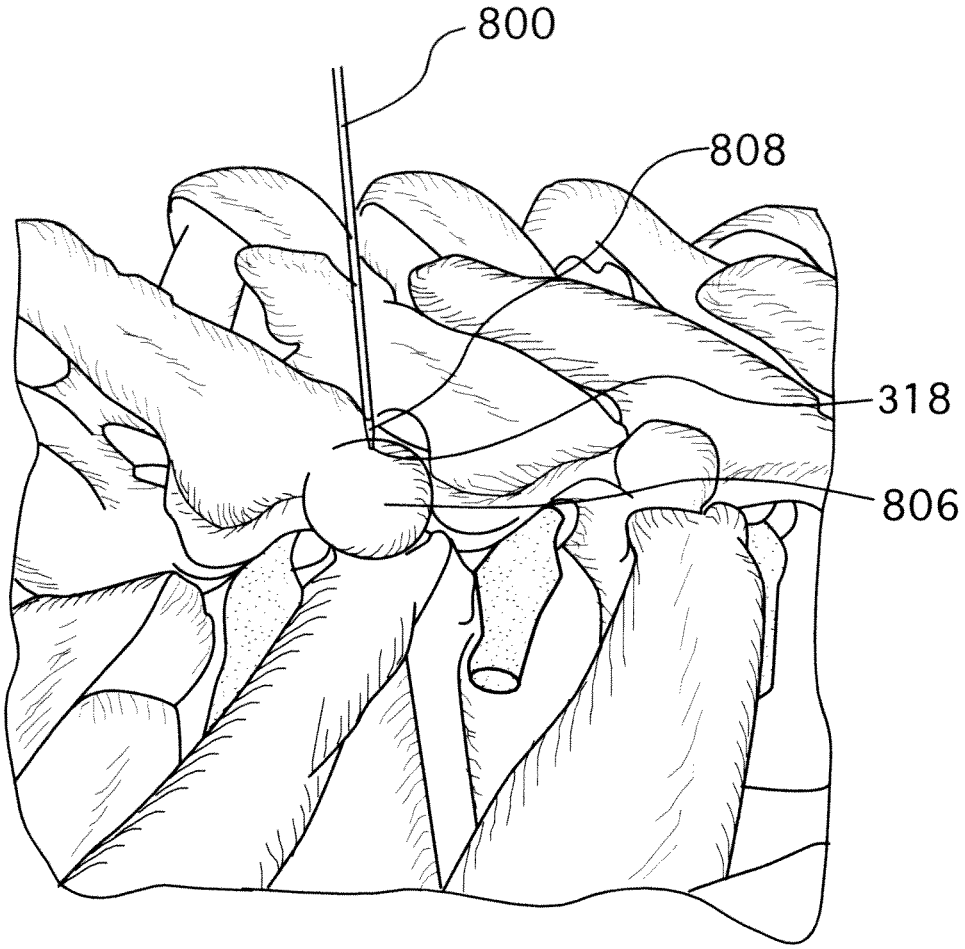

FIG.8B

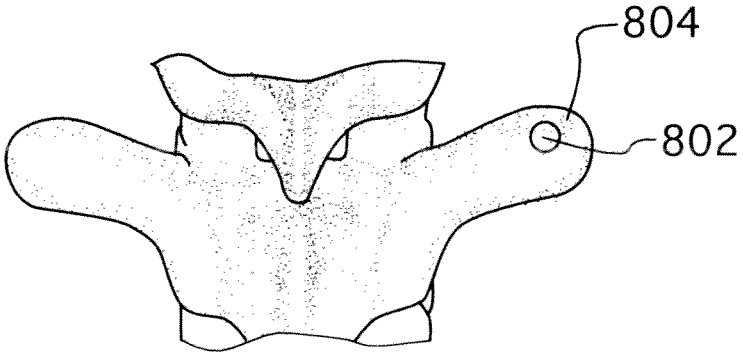

FIG.8A

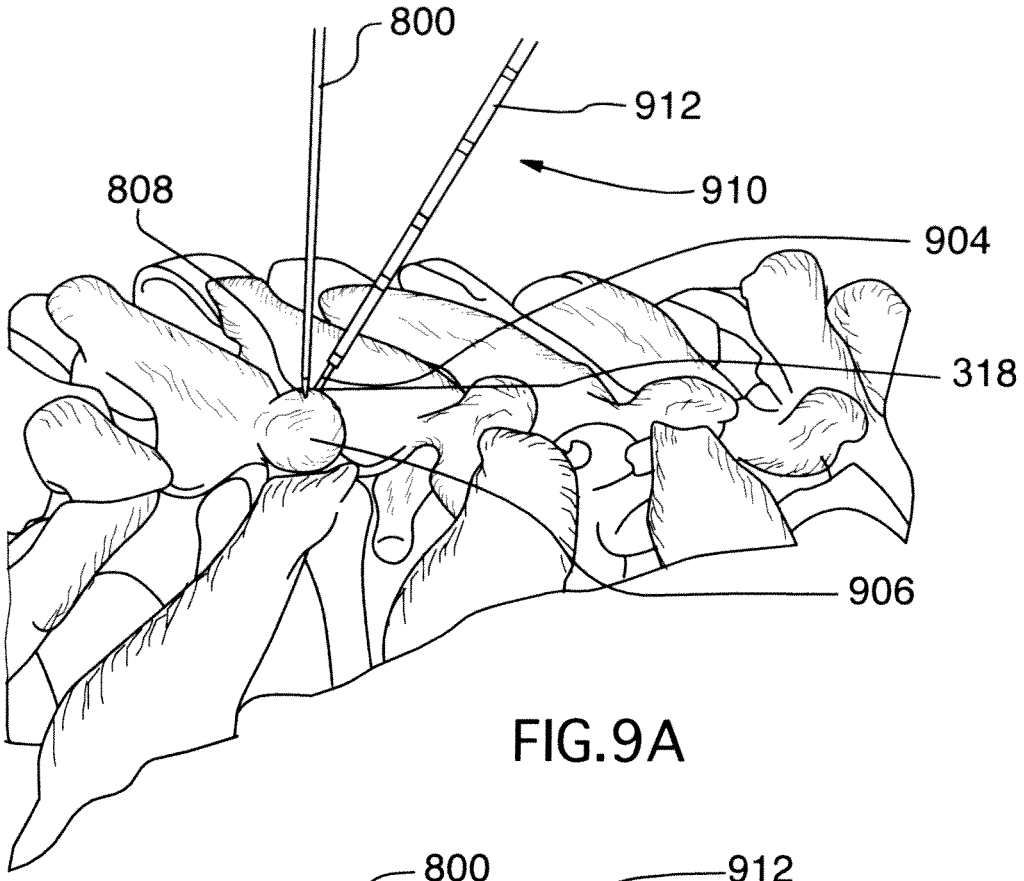

FIG.9A

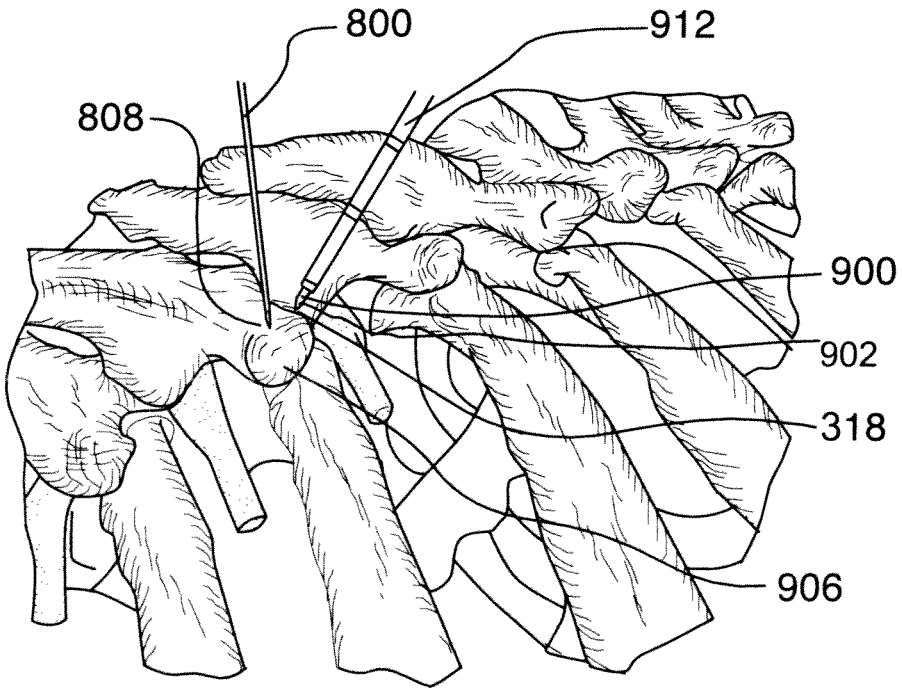

FIG.9B

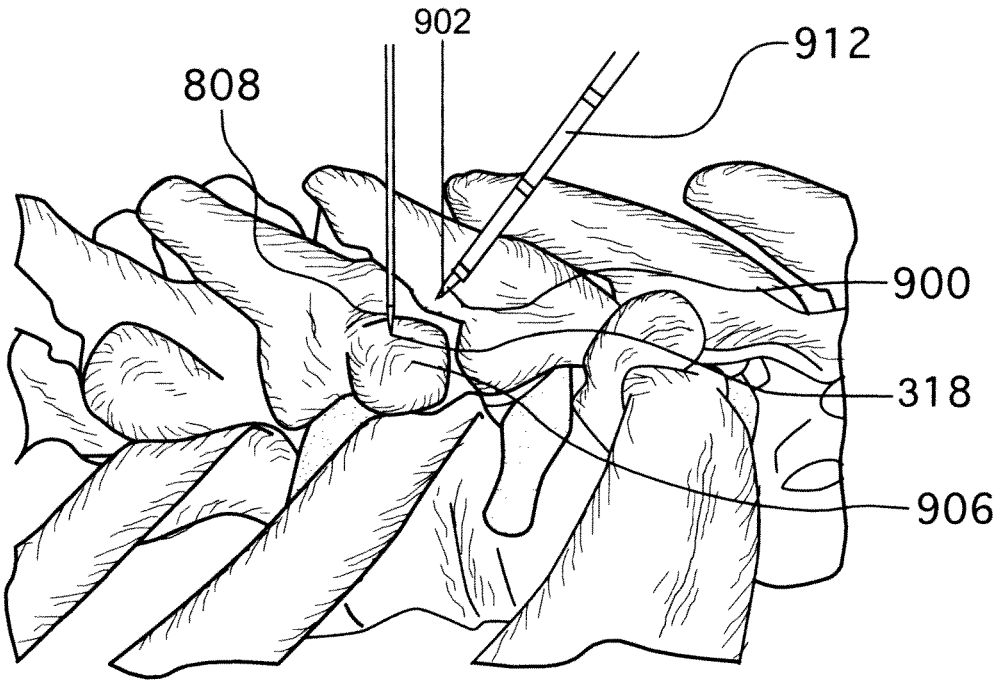

FIG.9C

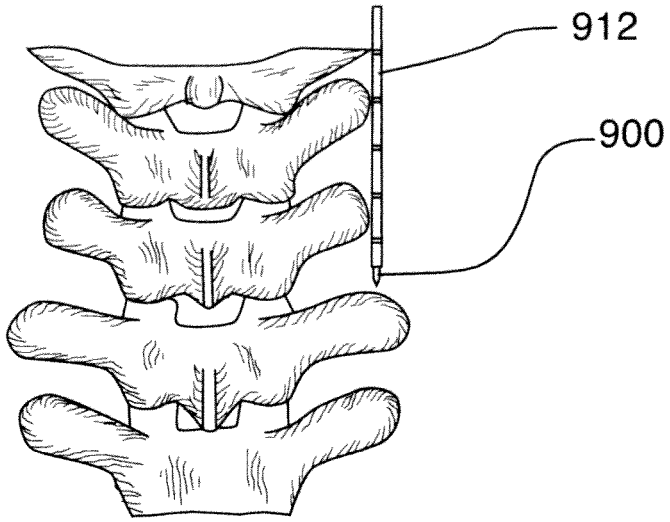

FIG.10A

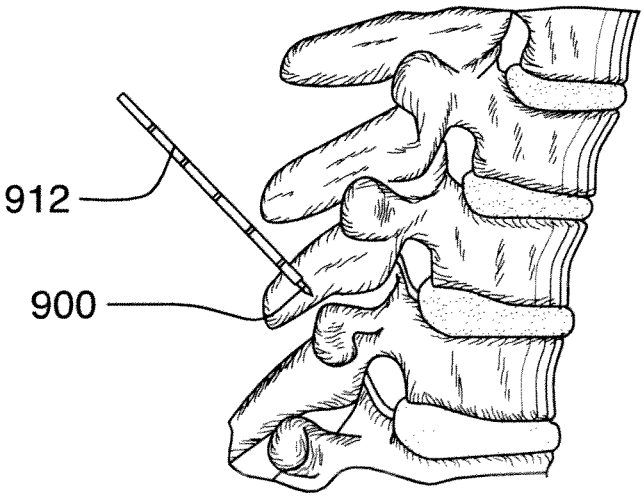

FIG.10B

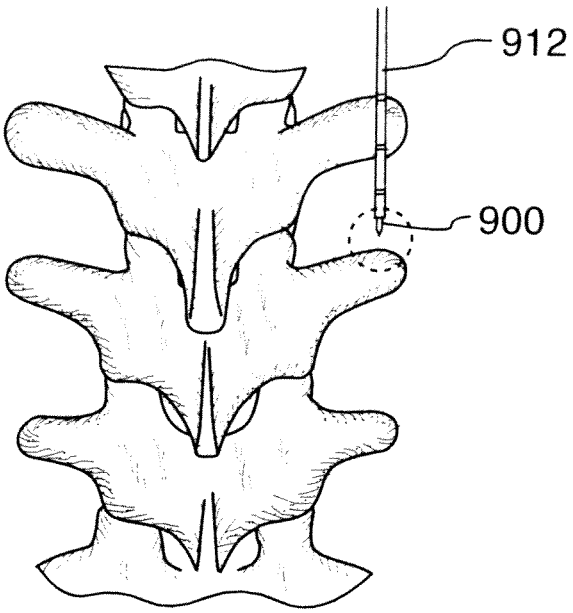

FIG.11A

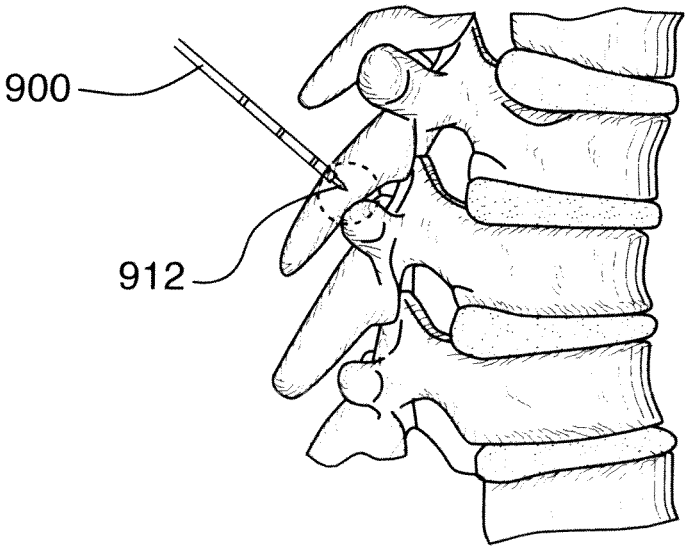

FIG.11B

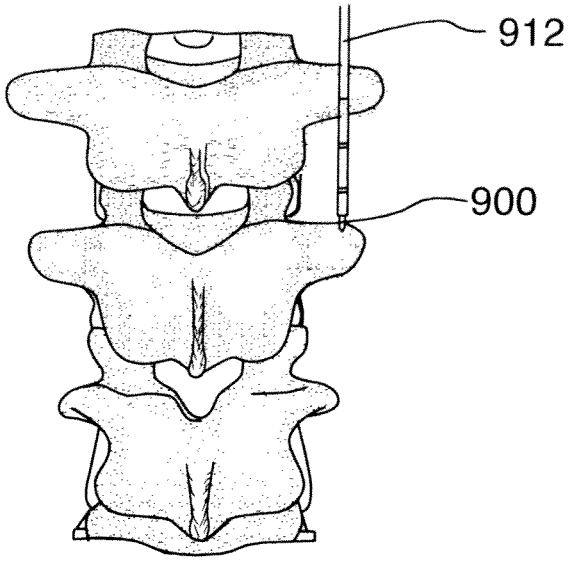

FIG.12A

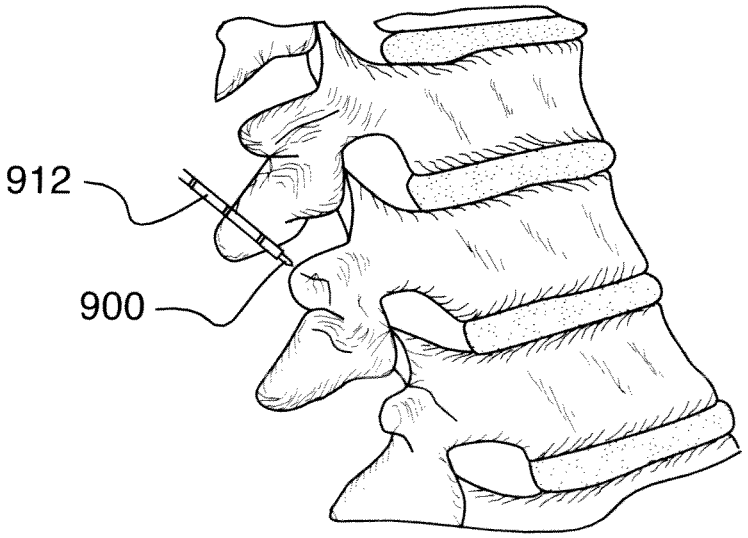

FIG.12B

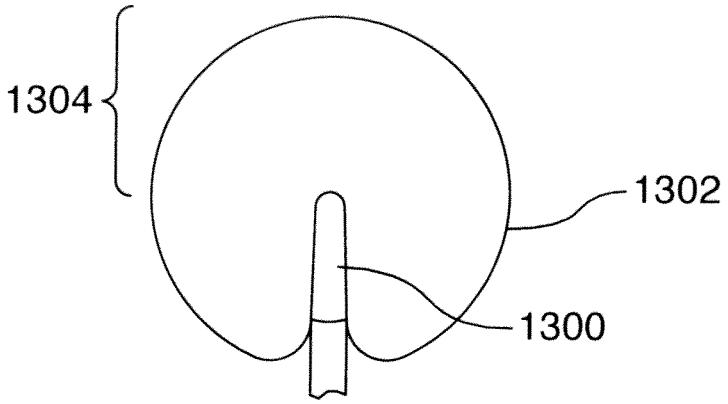

FIG.13B

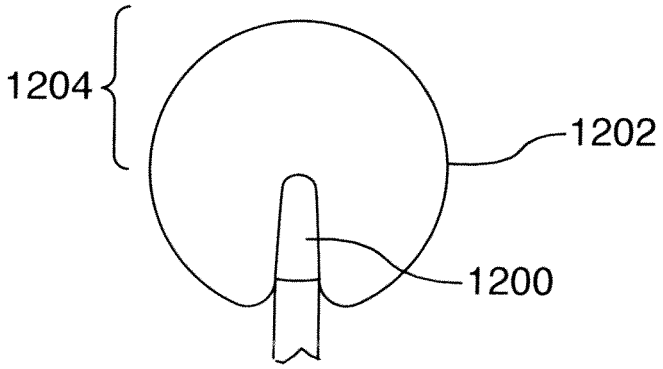

FIG.13A

METHODS FOR TREATING THE THORACIC REGION OF A PATIENT'S BODY

CROSS REFERENCES TO RELATED APPLICATIONS

This application is a continuation-in-part of U.S. patent application Ser. No. 12/176,035 (filed Jul. 18, 2008), which claims the benefit of U.S. Provisional Patent Application No. 60/950,706 (filed Aug. 19, 2007) and is a continuation-in-part of U.S. patent application Ser. No. 11/457,697 (filed Jul. 14, 2006). U.S. patent application Ser. No. 11/457,697 (filed Jul. 14, 2006) is a continuation-in-part of U.S. patent application Ser. No. 11/105,527 (filed Apr. 14, 2005), Ser. No. 11/105,490 (filed Apr. 14, 2005), and Ser. No. 11/105,524 (filed Apr. 14, 2005), all of which claim the benefit of U.S. Provisional Patent Application 60/604,348 (filed on Aug. 25, 2004), and are continuations-in-part of U.S. patent application Ser. No. 10/087,856 (tiled on Mar. 5, 2002), now U.S. Pat. No. 6,896,675. This application is also a continuation-in-part of U.S. patent application Ser. No. 11/381,783 (filed on May 5, 2006). This application is also a continuation-in-part of U.S. patent application Ser. No. 10/864,410 (filed on Jun. 10, 2004). This application is also a continuation-in-part of U.S. patent application Ser. No. 11/207,707 (filed on Aug. 22, 2005). U.S. patent application Ser. No. 11/207,707 is a continuation-in-part of U.S. patent application Ser. No. 11/079,318 (filed on Mar. 15, 2005) which is a continuation-in-part of U.S. patent application Ser. No. 10/382,836 (filed on Mar. 7, 2003). U.S. patent application Ser. No. 11/207,707 is also a continuation-in-part of U.S. patent application Ser. No. 11/125,247 (filed on May 10, 2005), which is a continuation-in-part of Ser. No. 10/853,126 (filed on May 26, 2004). This application also claims the benefit of U.S. Provisional Patent Applications 60/743,511 (filed on Mar. 16, 2006), 60/595,559 (filed on Jul. 14, 2005), 60/595,560 (filed on Jul. 14, 2005), and 60/744,518 (filed on Apr. 10, 2006). All of the aforementioned patents and applications are incorporated herein by reference, in their entirety.

TECHNICAL FIELD

The invention relates to a method of electrosurgery. Specifically, the invention relates to a method of electrosurgery for treating a thoracic region of a spine of a patient's body.

BACKGROUND OF THE INVENTION

Radiofrequency energy is used in order to treat pain radiating from nerves in the spine. Several prior-art approaches exist in order to target an RF probe at the desired target location. However, regardless of the approach used, a limitation of RF techniques is that the lesion forms immediately adjacent to the probe tip. Hence the efficacy of the treatment is dependent upon the probe tip being in contact with or in close proximity to the target nerve. The treatment may be ineffective if the probe is positioned in the general area of the target nerve but not adjacent to the nerve. This has been outlined in Bogduk et al. (Neurosurgery, 20(4): 529-535, 1987) as the reason for low success rate of RF neurotomy in the spine, "despite the accurate placement of electrodes onto anatomically correct target points, the lesions may not fully incorporate the nerve. The electrode tip may have rested close to the nerve. However, RF electrodes coagulate circumferentially and only minimally distally, therefore the lesion may have been placed superficial to the nerve." This problem is not limited to a perpendicular approach, as in the parallel

approach even though "an electrode lying parallel to the nerve is more likely to incorporate the nerve . . . this modification relies critically on the accurate placement of the electrode". Hence, the success of RF lesioning in the spine is dependent on the accurate positioning of the probe at the target nerve.

The thoracic region of the spine is a stable structure; thus a high prevalence of thoracic pain would not be expected. However, it has been shown that between 15 and 24% of people suffering from spinal pain experience upper back/thoracic pain (Linton et al., 1998; Manchikanti and Pampati, 2002). Facet joint pain accounts for 42% to 48% of patients with chronic thoracic pain (Manchikanti et al., 2004; Manchikanti et al., 2002). In summary, thoracic facet pain represents 6 to 12% of all spinal pain. Thus the present invention is directed to treating pain in the thoracic region of the spine.

SUMMARY

The course of the nerves in the thoracic spine varies considerably between individuals as well as between the different thoracic levels. Thus, in order to create an effective lesion, the electrosurgical device needs to be positioned to suit the varying anatomies. Embodiments of the present invention allow for effective treatment in the different thoracic levels. The use of cooling with standard RF allows the lesion to be formed substantially distal to the tip of the electrosurgical where the lesion forms between the electrosurgical device and the thoracic vertebra. This allows for effective lesioning of the target nerve when the electrosurgical device is positioned at a distance from the nerve. This ensures that when the probe is positioned near the course of the target nerve, the resulting lesion encompasses the target nerve. This provides an advantageous benefit not found in the prior art, in that it obviates the need for a probe to be placed in very close proximity to a target nerve in order to effectively lesion the target nerve. Thus, embodiments of the present invention are directed to a system and method for providing an effective treatment of a target nerve in the spine. More specifically, embodiments of the present invention are directed to treating the thoracic region of the spine.

In one broad aspect embodiments of the present invention are directed to a method of treatment of a thoracic region of a patient's body, the method comprising: positioning an energy delivery portion of an electrosurgical device to face a segment of a thoracic vertebra at a distance from the segment; and cooling the energy delivery portion and delivering energy through the energy delivery portion. As one feature of this aspect a lesion is formed at least substantially distal to the energy delivery portion. As another feature of this aspect a lesion is formed at a location at least between the energy delivery portion and the segment of the thoracic vertebra.

In another broad aspect embodiments of the present invention are directed to a method of treatment of a thoracic region of a patient's body, the method comprising: inserting an introducer apparatus into the patient's body, the apparatus comprising a cannula and an obturator disposed within a lumen of the cannula, the obturator protruding from a distal end of the cannula; positioning the apparatus such that a distal tip of the obturator abuts a segment of a thoracic vertebra; removing the obturator from within the cannula; inserting an electrosurgical device within the cannula, to position an energy delivery portion of the electrosurgical device at a distance from the segment of the thoracic vertebra; and delivering energy through the energy delivery portion and cooling the energy

delivery portion, whereby a lesion forms at least between the energy delivery portion and the segment of the thoracic vertebra.

BRIEF DESCRIPTION OF THE DRAWINGS

In order that the invention may be readily understood, embodiments of the invention are illustrated by way of examples in the accompanying drawings, in which:

FIG. **1**A is a perspective view of an embodiment of an electrosurgical device suitable for use with a method of the present invention;

FIG. **1**B is a top view of the device of FIG. **1**A;

FIG. **1**C is a cross-sectional view of the device of FIG. **1**A taken along the line **1**C-**1**C in FIG. **1**B;

FIG. **2** is a perspective view of an embodiment of a system suitable for use with a method of the present invention;

FIG. **3**A is a view of the thoracic vertebrae of a patient's spine, showing a target site for energy delivery;

FIGS. **3**B-**3**D are lateral views of the thoracic vertebrae showing the path of the nerves at the T1-T4, T5-T9 and T11-T12 thoracic levels;

FIG. **4** illustrates a position of an electrosurgical device with respect to the thoracic vertebrae in accordance with an embodiment of a method of the present invention;

FIGS. **5**A-**5**D illustrate steps involved in positioning an electrosurgical device in accordance with an embodiment of a method of the present invention;

FIG. **6** is a view of the thoracic vertebrae of a patient's spine, showing an alternate target site for energy delivery;

FIG. **7** illustrates an alternate position of an electrosurgical device with respect to the thoracic vertebrae in accordance with an embodiment of a method of the present invention;

FIG. **8**A illustrates the target location for inserting a spinal needle at the transverse process in accordance with one embodiment of the present invention;

FIG. **8**B is a lateral view of the thoracic vertebrae showing a spinal needle at the transverse process, in accordance with an embodiment of the present invention;

FIG. **9**A is a lateral view of the thoracic vertebrae showing an introducer apparatus positioned at the tip of the spinal needle in accordance with an embodiment of the present invention;

FIG. **9**B is a lateral view of an electrosurgical device within a cannula, positioned at a distance from the transverse process in accordance with an embodiment of the present invention;

FIG. **9**C is an oblique view of an electrosurgical device within a cannula, positioned at a distance from the transverse process in a accordance with an embodiment of the present invention;

FIG. **10**A shows an anterior-posterior view of an electrosurgical device at a vertebra in the upper thoracic portion in accordance with an embodiment of the present invention;

FIG. **10**B shows a lateral view of an electrosurgical device at a vertebra in the upper thoracic portion in accordance with an embodiment of the present invention;

FIG. **11**A shows an anterior-posterior view of an electrosurgical device at a vertebra in the mid-thoracic portion in accordance with an embodiment of the present invention;

FIG. **11**B shows a lateral view an electrosurgical device at a vertebra in the mid-thoracic portion in accordance with an embodiment of the present invention;

FIG. **12**A shows an anterior-posterior view of an electrosurgical device at vertebra in the lower-thoracic portion in accordance with an embodiment of the present invention;

FIG. **12**B shows a lateral view of an electrosurgical device at vertebra in the lower-thoracic portion in accordance with an embodiment of the present invention;

FIG. **13**A shows a lesion in accordance with one embodiment of the present invention; and

FIG. **13**B shows a lesion in accordance with another embodiment of the present invention.

DETAILED DESCRIPTION OF THE INVENTION

In one broad aspect, the present invention comprises a method for treating a thoracic region of a spine of a patient's body, for example in order to treat pain. Some embodiments of the method comprise positioning an energy delivery portion of an electrosurgical device to face a segment of a thoracic vertebra at a distance from the segment; and cooling the energy delivery portion and delivering energy through the energy delivery portion. As a feature of this aspect a lesion is formed at least substantially distal to the energy delivery portion. As another feature of this aspect a lesion is formed at a location at least between the energy delivery portion and the segment of the thoracic vertebra. In one feature of this aspect the energy delivery portion electrosurgical device may be inserted and positioned in a relatively safe, effective, and efficient manner. In one example, the energy delivery portion is positioned in proximity to a medial branch of a thoracic dorsal ramus nerve and a lesion is formed at the medial branch of the dorsal ramus nerve. In some embodiments the lesion may form between the energy delivery device and a segment of the thoracic vertebra.

In another broad aspect, the embodiments of the present invention are directed to a method of treatment of the thoracic region of a patient's body. Some embodiments of the method comprise inserting an introducer apparatus into the patient's body. The apparatus comprises a cannula and an obturator disposed within a lumen of the cannula such the obturator protrudes from a distal end of the cannula; positioning the apparatus such that a distal tip of the obturator abuts a segment of the thoracic vertebra; and inserting an electrosurgical device within the cannula such that an energy delivery portion of the device is positioned at a distance from the segment of the thoracic vertebra. The method further comprises delivering energy through the energy delivery portion and cooling the energy delivery portion such that a lesion forms at least between the energy delivery portion and the segment of the thoracic vertebra.

In another embodiment, a finder needle may be placed at the superior-lateral aspect to guide the placement of the introducer apparatus.

In some embodiments the electrosurgical device is positioned at a superolateral aspect of a transverse process of a thoracic vertebra. In some such embodiments, the electrosurgical device is inserted into the patient's body such that at least a portion of the electrosurgical device is generally upstanding relative to a portion of the superolateral aspect. In some such embodiments, inserting the electrosurgical device comprises aligning the electrosurgical device such that it is oriented substantially away from an anterior-posterior axis of the patient's body, in a substantially cranial direction and advancing the electrosurgical device into the patient's body towards the superior aspect of the transverse process. In one example of the embodiment, the electrosurgical device is positioned at a distance from the superior-lateral aspect. In one example the device is positioned such that an energy delivery portion of the device is facing the superior-lateral

aspect of the transverse process. In some embodiments the lesion forms substantially distal to the energy delivery portion of the device.

In alternate embodiments, the electrosurgical device is inserted into the patient's body such that at least a portion of the electrosurgical device is positioned at a centroid of the transverse process. In some such embodiments, inserting the electrosurgical device comprises aligning an electrosurgical device substantially with an anterior-posterior axis of a patient's body; advancing the electrosurgical device into the patient's body towards the centroid of the transverse process; and positioning the energy delivery portion in proximity to the superolateral aspect of the transverse process. In one example of this embodiment the electrosurgical device is positioned at a distance from the superolateral aspect. In one example, the lesion forms at least substantially distal to the energy delivery portion of the device. In an example of this embodiment a lesion is formed between the energy delivery portion and the superior-lateral aspect.

In further embodiments, the target site is a lamina of the thoracic vertebra. In some such embodiments, the electrosurgical device is inserted into the patient's body such that at least a portion of the electrosurgical device is generally upstanding relative to a portion of the lamina. In some such embodiments, inserting the electrosurgical device comprises aligning the electrosurgical device such that it is oriented substantially away from an anterior-posterior axis of the patient's body, in a substantially lateral direction and advancing the electrosurgical device into the patient's body towards the lamina. Further embodiments of the present invention are described herein below:

With specific reference now to the drawings in detail, it is stressed that the particulars shown are by way of example and for purposes of illustrative discussion of certain embodiments of the present invention only, and are presented in the cause of providing what is believed to be the most useful and readily understood description of the principles and conceptual aspects of the invention. In this regard, no attempt is made to show structural details of the invention in more detail than is necessary for a fundamental understanding of the invention, the description taken with the drawings making apparent to those skilled in the art how the several forms of the invention may be embodied in practice.

Before explaining at least one embodiment of the invention in detail, it is to be understood that the invention is not limited in its application to the details of construction and the arrangement of the components set forth in the following description or illustrated in the drawings. The invention is capable of other embodiments or of being practiced or carried out in various ways. Also, it is to be understood that the phraseology and terminology employed herein is for the purpose of description and should not be regarded as limiting.

Device

Several embodiments of electrosurgical devices suitable for use with embodiments of the present invention are disclosed in U.S. patent application Ser. No. 11/457,697 (filed on Jul. 14, 2006), which is incorporated herein by reference. One particular embodiment of an electrosurgical device suitable for use with embodiments of the present invention will presently be described. With reference first to FIG. **1**A, an embodiment of a device suitable for use with embodiments of the present invention is probe **100**. Probe **100** is an elongate member, comprising a shaft **122**, a distal region **104**, a distal end **106**, a proximal region **108**, and a proximal end **110**. As used herein, the terms "distal" and "proximal" are defined with respect to the user and when the device is in use. That is, the term "distal" refers to the part or portion further away from the user, while the term "proximal" refers to the part or portion closer to the user, when the device is in use.

Probe **100** defines a lumen **124**. Proximal end **110** defines an aperture, which is in communication with lumen **124**. Probe **100** comprises an electrically insulated portion **116** and an electrically exposed conductive portion **118**. Electrically exposed conductive portion **118** may also be referred to as an active electrode and is an example of an "energy delivery portion" mentioned herein.

The proximal region of probe **100** comprises a hub **114**. Hub **114** is structured to operatively connect other devices, such as connector cables, cannulae, tubes, or other hubs, for example, to probe **100**. For example, probe **100** may be coupled to an energy source and/or to a source of cooling via respective connecting means (for example, an electrical cable and/or flexible tubing) which may be associated with hub **114**. Hub **114** may also serve as a handle or grip for probe **100**. Hub **114** may be manufactured from a number of different materials, including, but not limited to, plastics, polymers, metals, or combinations thereof. Furthermore, hub **114** may be attached to probe **100** by a number of different means. For example, in one embodiment, hub **114** may be made from polypropylene, and may be attached to probe **100** by insert molding.

The size of probe **100** may vary, depending upon which of the method embodiments, described herein below, are used. In some embodiments, the length from distal end **106** to proximal end **110** of probe **100** may be between about 5 cm and about 40 cm and the outer diameter of shaft **122** may be between about 0.65 mm and about 2.00 mm (between about 20 G and about 12 G). In one specific example, the length of the probe may be about 7.5 cm and the outer diameter may be about 1.5 mm. Furthermore, the size and shape of active electrode **118** may vary, as is further described in U.S. patent application Ser. No. 11/457,697, previously incorporated herein by reference. For example, in some embodiments, active electrode **118** may be between about 2 mm and about 8 mm in length. In other embodiments, active electrode **118** may comprise substantially only the distal face of probe **100**.

In some embodiments, electrically insulated portion **116** may be formed by coating a portion of shaft **122** with an electrically insulative coating, covering, or sheathing. For example, in one particular embodiment, shaft **122** of probe **100** may be fabricated from a biocompatible metal or alloy, for example stainless steel, which may be overlaid in part by an insulating coating, for example polytetrafluoroethylene (PTFE). In other embodiments, shaft **122** may be fabricated from another metal, such as nitinol or titanium, and/or the insulating coating may comprise a different electrically insulating material, including but not limited to polyethylene terephthalate (PET). In other embodiments, other metals or electrically insulating materials may be used.

Probe **100** is structured such that it may be cooled by the internal circulation of a cooling fluid. Such a configuration, whereby a cooling medium does not exit from a distal region **104** of probe **100**, may be referred to as an internally-cooled probe. The cooling fluid may be any fluid suitable for removing heat from probe **100** during surgery, for example water. Other examples of cooling fluid include, but are not limited to, liquid nitrogen and saline. Furthermore, the fluid may be at any temperature suitable for removing heat from the probe during surgery, for example between about 0° C. and about 25° C. More specifically, the temperature of the fluid may be at about room temperature (21° C.), about 4° C., or about 0° C., depending on the application.

The fluid may be delivered or circulated at a wide range of flow-rates. An appropriate flow-rate may be determined or

calculated based on a number of factors, including the conductivity and heat capacity of probe **100**, the cooling fluid and/or the tissue, and the desired temperature of distal end **106** of probe **100**, among other factors. In some embodiments, the fluid may be delivered at between about 10 ml/min and about 30 ml/min.

The internal structure of probe **100** is shown in FIG. **1**C. The shaft of probe **100** defines a first lumen **124**, and the proximal end **110** of probe **100** is open and in communication with lumen **124**. The distal end **106** of probe **100** is closed. Probe **100** further comprises an internal cannula, cylinder, or tube **130** disposed within lumen **124**, defining a second lumen **126**. Internal tube **130** has an open distal end, which is located proximally to distal end **106** of probe **100**, and an open proximal end. The proximal end of internal tube **130** is structured to be operatively connected to a source of cooling fluid. For example, hub **114** may be operable to connect internal tube **130** to a flexible tube. The proximal end of the flexible tube may be connected to the cooling source, for example a reservoir of fluid, whereby the flexible tube functions as an inflow tube for cooling fluid from the reservoir to probe **100**. Thus, in use, fluid flows from the reservoir of fluid, through the flexible tube, and into internal tube **130**. The fluid subsequently exits the distal end of internal tube **130**, flows into lumen **124** of probe **100**, and exits probe **100** via open proximal end **110**. Open proximal end **110** is coupled to means for disposing of the fluid or for returning the fluid to the reservoir. For example, another flexible tube may operatively connect proximal end **110** to the reservoir, such that the flexible tube functions as an outflow tube for the cooling fluid.

As mentioned hereinabove, one or more fluids may be delivered from a reservoir to lumen **124** of probe **100** for the purposes of cooling probe **100**. The fluid(s) may be delivered to the probe **100** via a number of means, and the invention is not limited in this regard. For example, in one embodiment and with reference to FIG. **2**, the reservoir of fluid may comprise a container, for example an intravenous (IV) bag **214**, which is elevated above the patient. Tubing **216**, for example clear plastic flexible tubing, may be used to connect the reservoir to an inlet in probe **100**. A valve **218** may be placed at the junction of the container and the tubing (or at some other location between the container and the probe), such that when the valve is opened, gravity may cause fluid to flow towards probe **100**. After circulation within probe **100**, fluid may exit probe **100** via tubing, which may drain into another reservoir, for example a second IV bag, or into a sink or other drain. In another embodiment, at least one pump may be used to deliver fluid to the probe **100**. For example, at least one peristaltic pump **210** may be operatively connected to a reservoir of fluid. The reservoir of fluid may be an IV bag, a polypropylene vial or burette, or another container, for example. The pump(s) may pump the fluid from the reservoir to an inlet in probe **100**. After circulating in probe **100**, the fluid may exit the probe through an outlet in probe **100** and may flow through a tube to either the same or a different reservoir or, alternatively, to an alternate location as described above. A heat sink, heat exchanger, or other cooling source such as a refrigerant chiller may be used to cool the fluid after exiting the probe **100**. A second pump, gravity, or a source of suction, for example, may assist in drawing the fluid out of the probe **100**.

With reference again to FIGS. **1**A-**1**C, probe **100** comprises a temperature sensing device **112**. Temperature sensing device **112** may be any means for sensing and/or measuring temperature, including, but not limited to, a thermocouple, a thermistor, an optical fluorescence sensor, and a resistance thermometer. Temperature sensing device **112** is positioned at the distal region of probe **100**, at distal end **106**.

Probe **100** comprises means for operatively connecting temperature sensing device **112** to an external device. In some embodiments, such a device is a display or screen, such that the temperature measured by the temperature sensing device may be viewed by a user. In other embodiments, the external device is an electrical generator, such that temperature feedback may be provided to the electrical generator. Means for operatively connecting temperature sensing device **112** to an external device may comprise an insulated wire **128**, which may extend proximally from temperature sensing device **112**, through a lumen of probe **100** (such as the first lumen **124** as shown in FIG. **1**C), and out of probe **100** through proximal end **110**. Wire **128** may be any temperature or electrical conductor capable of operatively connecting temperature sensing device **112** to an external device. Alternatively, temperature sensing device **112** may be operatively connected to an external device via a wireless connecting means, including, for example, infrared or Bluetooth®. Further details regarding temperature sensing devices may be found in U.S. patent application Ser. No. 11/105,490 (filed on Apr. 14, 2005), incorporated herein by reference.

With reference again to FIG. **2**, an embodiment of a system suitable for use with probe **100** may comprise one or more of: one or more introducer apparatuses **204**, for example a cannula **204**; one or more dispersive return electrodes (not shown); one or more sources of cooling, for example pump **210**; one or more energy sources, for example generator **208**; and one or more connecting means, for example tube **212** and/or cable **213**.

The introducer apparatus may aid in inserting probe **100** into a patient's body. The introducer apparatus may comprise a hollow elongate introducer or cannula **204** and an obturator **206**. Further details regarding introducer apparatuses are disclosed in U.S. patent application Ser. No. 11/457,697 (filed on Jul. 14, 2006), previously incorporated herein by reference.

Probe **100** is structured to be operatively connected to an energy source, for example a generator **208**. The connecting means for connecting probe **100** to generator **208** may comprise any component, device, or apparatus operable to make one or more electrical connections, for example an insulated wire or cable. In one embodiment, the connecting means comprises an electrical cable **213** terminating at hub **114** as well as a connector at a proximal end thereof. Cable **213** may be operable to couple to energy source **208** directly or indirectly, for example via an intermediate cable. At least one wire or other electrical conductor associated with cable **213** may be coupled to a conductive portion of shaft **122**, for example by a crimp or solder connection, in order to supply energy from energy source **208** to shaft **122**. In one specific embodiment, a 4-pin medical connector is used to connect cable **213** to an intermediate cable (not shown), which may be further attached to a 14-pin connector capable of being automatically identified when connected to generator **208**. Further details regarding such an embodiment are disclosed in U.S. patent application Ser. No. 10/122,413 (filed on Apr. 16, 2002), incorporated herein by reference.

Generator **208** may produce various types of energy, for example microwave or radio-frequency electrical energy. In some embodiments, generator **208** produces radiofrequency electrical current, having a frequency of between about 10 kHz and about 1000 kHz, at a power of between about 1 W and about 50 W. An example of an RF generator that may be used as part of a system of the present invention is the Pain Management Generator (PMG) of Baylis Medical Company Inc. (Montreal, QC, Canada). Further details regarding

embodiments of energy sources are disclosed in U.S. patent application Ser. No. 11/457,697 (filed on Jul. 14, 2006), previously incorporated herein by reference.

As mentioned hereinabove, in some embodiments, one or more peristaltic pumps **210** are used to supply a cooling fluid to and return a cooling fluid from probe(s) **100**. In other embodiments, other types of pumps may be used. Examples include, but are not limited to, a centrifugal pump or a piston pump. As mentioned above with respect to temperature control, controlling the delivery of a cooling fluid, or other cooling means, may be performed for each probe independently, or the cooling may be controlled based on an average temperature measurement or a measurement recorded from one probe, for example. Further details regarding the cooling source are provided in U.S. patent application Ser. No. 11/105,527 (filed on Apr. 14, 2005) and Ser. No. 10/864,410 (filed on Dec. 10, 2005).

Methods

Embodiments of a method of the present invention allow for the creation of a lesion between an energy delivery portion of an electrosurgical device and some predetermined location, such as a segment of a thoracic vertebra. For example, a lesion may be created substantially distal to and facing the energy delivery portion by delivering energy to the energy delivery portion and cooling the energy delivery portion. This provides an advantageous benefit not found in the prior art, in that it obviates the need for a probe **100** to be placed in very close proximity to a target nerve in order to effectively lesion the target nerve.

In one broad aspect, an embodiment of a method of the present invention comprises positioning an energy delivery portion of an electrosurgical device to face a segment of a thoracic vertebra at a distance from the segment; and cooling the energy delivery portion and delivering energy through the energy delivery portion whereby a lesion is formed at least substantially distal to the energy delivery portion. In some embodiments the lesion is formed at a location at least between the energy delivery portion and the segment of the thoracic vertebra.

In one broad aspect, the present invention comprises a method for treating a thoracic region of a spine of a patient's body, for example in order to treat pain. Some embodiments of the method comprise inserting an electrosurgical device into a patient's body and positioning an energy delivery portion of the electrosurgical device in proximity to a medial branch of a thoracic dorsal ramus nerve such that the energy delivery portion is positioned at a distance from and facing a segment of a thoracic vertebra; delivering energy through and/while cooling the energy delivery portion to create a lesion at the medial branch of the thoracic dorsal ramus nerve. Preferably the lesion forms at least substantially distal to the energy delivery portion. In one example of the embodiment, the lesion forms between the energy delivery portion and a segment of the thoracic vertebra. As a feature of this aspect, the electrosurgical device may be inserted and positioned in a relatively safe, effective, and efficient manner.

In another broad aspect the embodiments of the present invention are directed to a method of treatment of the thoracic region of a patient's body where the method comprises inserting an introducer apparatus into the patient's body. The apparatus comprises a cannula and an obturator disposed within a lumen of the cannula the obturator protruding from a distal end of the cannula. The apparatus is positioned such that a distal tip of the obturator abuts a segment of the thoracic vertebra. An electrosurgical device is then inserted within the cannula to position an energy delivery portion of the device at a distance from the segment of the thoracic vertebra. The method further comprises delivering energy through the energy delivery portion and cooling the energy delivery portion whereby a lesion forms at least between the energy delivery portion and the segment of the thoracic vertebra.

In one embodiment of the present invention a marker is used in order to position the electrosurgical device. In some embodiments the marker may be used in order to position an introducer apparatus. Some embodiments of the method comprise positioning a marker such that a distal end of the marker abuts a segment of a thoracic vertebra, the marker functioning as a visual reference for positioning an electrosurgical device. When viewed under imaging, an electrosurgical device such as probe is advanced towards the marker to position the distal tip of the device at the distal end of the marker.

In some embodiments the target site is a superolateral aspect of a transverse process of a thoracic vertebra. In some such embodiments, the electrosurgical device is inserted into the patient's body such that at least a portion of the electrosurgical device is generally upstanding relative to a portion of the superolateral aspect. In some such embodiments, inserting the electrosurgical device comprises aligning the electrosurgical device such that it is oriented substantially away from an anterior-posterior axis of the patient's body, in a substantially cranial direction and advancing the electrosurgical device into the patient's body towards the superior aspect of the transverse process. The electrosurgical device is positioned such that the energy delivery portion of the device is at a distance from the superior-lateral portion of the transverse process. In one embodiment the energy delivery portion is cooled substantially while delivering energy, such a lesion forms at least substantially distal to the energy delivery portion.

In alternate embodiments, the electrosurgical device is inserted into the patient's body such that at least a portion of the electrosurgical device is positioned at a centroid of the transverse process. In some such embodiments, inserting the electrosurgical device comprises aligning an electrosurgical device substantially with an anterior-posterior axis of a patient's body; advancing the electrosurgical device into the patient's body towards the centroid of the transverse process; and positioning the energy delivery portion is in proximity to the superolateral aspect of the transverse process. The device is positioned such that an energy delivery portion of the device is positioned at a distance from the superolateral aspect of the transverse process. In one embodiment, the energy delivery portion of the device is cooled substantially while delivering energy, such that a lesion extends between the energy delivery portion and the superolateral aspect. In one example the lesion is formed at least substantially distal to the energy delivery portion.

In further embodiments, the target site is a lamina of the thoracic vertebra. In some such embodiments, the electrosurgical device is inserted into the patient's body such that at least a portion of the electrosurgical device is generally upstanding relative to a portion of the lamina. In some such embodiments, inserting the electrosurgical device comprises aligning the electrosurgical device such that it is oriented substantially away from an anterior-posterior axis of the patient's body, in a substantially lateral direction and advancing the electrosurgical device into the patient's body towards the lamina. In addition to embodiments described above, further embodiments of the present invention will be described hereinbelow.

In one specific embodiment of the present invention, a method of lesioning a medial branch of a dorsal ramus nerve in a thoracic region of a patient's body is provided, the

method comprising: visualizing a thoracic vertebra of the patient's body along an anterior-posterior axis of the patient's body using fluoroscopic imaging; positioning a spinal needle at a superolateral aspect of a transverse process of the thoracic vertebra under guidance of the fluoroscopic imaging; visualizing the thoracic vertebra along an axis about 45 degrees caudal to the anterior-posterior axis; inserting an introducer apparatus into the patient's body along the axis about 45 degrees caudal to the anterior-posterior axis, the introducer apparatus comprising an obturator disposed within a lumen of a cannula, the obturator protruding from a distal end of the cannula by about 7.5 mm; guiding the introducer apparatus towards a tip of the spinal needle; positioning a distal tip of the obturator in abutting relation to the superolateral aspect of the transverse process, in proximity to the tip of the spinal needle; removing the obturator from the lumen of the cannula; inserting an electrosurgical device through the lumen of the cannula, the electrosurgical device having an energy delivery portion at a distal tip of the electrosurgical device, the electrosurgical device protruding from the distal end of the cannula by about 5.5 mm, whereby the energy delivery portion of the electrosurgical device is facing the superolateral aspect of the transverse process and is located about 2 mm away from the superolateral aspect of the transverse process; and delivering radiofrequency electrical energy to the energy delivery portion of the electrosurgical device while cooling the energy delivery portion of the electrosurgical device.

Referring now to FIG. **3**A, a brief description of the typical anatomy of the thoracic region of the spine is provided. The vertebrae **300** of the thoracic region of the spine are intermediate in size between those of the cervical and lumbar regions; the upper thoracic vertebrae being smaller than those in the lower part of the thoracic region. The vertebral bodies are generally as broad in the anterior-posterior as in the transverse direction. At the upper and lower ends of the thoracic region the vertebral bodies resemble respectively those of the cervical and lumbar vertebrae. As shown in FIG. **3**A, the pedicles of the thoracic vertebrae **300** are directed backward and slightly upward. The spinous process **308** is long and extends posterior and caudal, and ends in a tuberculated extremity. The thoracic facet joints are paired joints located between the superior **302** and inferior **304** articular processes of adjacent vertebrae. The superior articular processes **302** are thin plates of bone projecting upward from the junctions of the pedicles and laminae **316**; their articular facets are practically flat, and are directed posteriorly and slightly lateral and upward. The inferior articular processes **304** are fused to a considerable extent with the laminae **316**, and project slightly beyond their lower borders; their facets are directed anteriorly and slightly medial and downward. The transverse processes **306** arise from the arch behind the superior articular processes **302** and pedicles; they are directed obliquely backward and lateral.

The thoracic facet joints are innervated by the medial branches of the dorsal rami. The medial branches pass between consecutive transverse processes **306** and head medially and inferiorly, passing through the centroid region **314** of the transverse process **306**. The medial branches innervate the facet joint at the level of their respective spinal nerve and the two facet joints below. For example, the T1 medial branch innervates both the T1-T2 as well as the T2-T3 facet joints. At T1 to T4 and T9 and T10, the medial branches cross the superior-lateral aspect **318** of the transverse process **306**. At T5 to T8, the medial branches follow a similar course, but may remain suspended within the intertransverse space. At T11 and T12, the medial branch has a course akin to the lumbar medial branches such that they course posteriorly along the medial aspect of the transverse process **306**, at the root of the superior articular process **302**.

The medial branches of the dorsal rami assume a reasonably constant course for the upper thoracic and lower levels. Mid-thoracic medial branches follow a much more variable course and do not have a consistent osseous relation.

Two types of articular branches arise from the medial branches. Ascending branches arise from the medial branch as it passes caudal to the facet joint. These branches are short and they ramify in the inferior aspect of the facet joint capsule. A slender descending articular branch arises from the medial branch as it crosses the superolateral corner **318** of the transverse process **306**. It follows a sinuous course between the fascicles of multifidus to reach the superior aspect of the capsule of the facet joint below (Chua and Bogduk, 1995). Thus, thoracic facet joints, much like lumbar facet joints, receive bisegmental innervation from medial branches of dorsal ramus of the upper segment and one or more cephalad levels. For example, the T5 medial branch innervates the T5-6 and T6-7 facets.

Typically, in the T1-4 and T9-10 levels, the medial branch arises from the dorsal ramus within 5 mm of the lateral margin of the intervertebral foramen. The region **320** where the nerve is likely to be found is shown in FIGS. **3**B and **3**D. Upon leaving the intertransverse space, the medial branch **321** crosses the superolateral corner **318** of the transverse process **306** at its inflection point and then passes medially and inferiorly across the posterior surface of the transverse process **306** before ramifying into the multifidus muscles (not shown). Variability between individuals is minimal for the T1-T4 medial branches near the superolateral corner **318** of subjacent transverse process. Also, variability decreases greatly near the bone surface. The variability in the course of the medial branch is shown by the medial branches **321***a*, **321***b* and **321***c* of varying anatomies. Variability between individuals is minimal for the T9-T10 medial branches near the superolateral corner of subjacent transverse process as shown in FIG. **3**D. The variability decreases greatly near the surface of the bone as shown by the path of the nerves in region **322**. The reference numerals **321***a*, **321***b* and **321***c* indicate variable course of the nerve **321** in different individuals.

In the mid-thoracic levels from T5-8 as shown in FIG. **3**C, exceptions to the archetypical course occur where, although the course is parallel, the nerve may be displaced superiorly and therefore may not contact the transverse process **306** (Chua and Bogduk, 1995). The likely course of the nerve is indicated by the region **330**. Treatment at these levels is challenging as the nerve lacks a consistent osseus relation, which makes landmarking difficult. Variability between individuals is significant for the T5-T8 medial branch **331** near the superolateral corner of subjacent transverse process. The location of the medial branch may vary as indicated by the medial branches **331***a*, **331***b* and **331***c* in varying anatomies. Reference numerals **321***a*, **321***b* and **321***c* indicate variable course of the nerve **321** in different individuals.

At the T11 level, the medial branch runs across the lateral surface of the root of the superior articular process of the T12 (Chua and Bogduk, 1995). The T12 transverse process is much shorter than typical transverse processes. The T12 medial branch assumes a course analogous to the lumbar medial branches crossing the junction of the superior articular process and the transverse process (Chua and Bogduk, 1995).

Due to the varied course of the medial branch across the 12 thoracic levels, the lack of bony landmarks associated with the thoracic medial branch, and the anatomic differences among patients, it is often required to create several lesions in

order to denervate one thoracic facet joint, as described by Dreyfuss et al (ISIS Newsletter, December 1997, Volume 2, Number 6). Embodiments of the present invention allow for the formation of a relatively large lesion for denervating a facet joint or for treating other pathologies associated with a medial branch, for example musculocutaneous or muscular pain, thus providing a more straightforward, safer, more effective and less invasive procedure.

Embodiments of a method of treating thoracic pain in accordance with the present invention will be presently described in greater detail. The description will reference the anatomy of the first through tenth thoracic vertebrae. In some embodiments, the target site for treating thoracic pain may comprise the nerves innervating the facet joint, i.e. the medial branches of the dorsal rami. As described hereinabove, these nerves may be located substantially laterally, between two consecutive transverse processes, or substantially adjacent the superior edge of a transverse process. Thus, in a first embodiment, the target site **310** for energy delivery may be the superolateral aspect **318** of the transverse process of a thoracic vertebra and the region immediately superior thereto.

The path of the nerves in the thoracic spine varies between the different thoracic levels. The path can also vary considerably between different individuals. Thus, in order to create an effective lesion, the electrosurgical device needs to be positioned to match the varying anatomies.

Embodiments of the present invention allow for effective treatment in the different thoracic levels. The use of cooling with standard RF allows the lesion to be formed substantially distal to the tip of the electrosurgical device. In some embodiments the lesion forms between the electrosurgical device and the thoracic vertebra. Furthermore, it allows for effective treatment of the target nerve when the electrosurgical device is positioned at a distance from the nerve. This ensures that the resulting lesion encompasses the target nerve, when the probe is positioned near the course of the target nerve. Thus embodiments of the present invention are directed to a system and method for providing an effective treatment of a target nerve in the thoracic region of the spine. More specifically, the method is directed to positioning an energy delivery portion of a device at a distance from a segment of a thoracic vertebra. and cooling the energy delivery portion such that a lesion forms substantially distal to the energy delivery portion.

As described in U.S. patent application Ser. No. 11/457,697, previously incorporated herein by reference, in some embodiments, the step of inserting the electrosurgical device may comprise the use of an introducer apparatus to position the electrosurgical device at a distance from a segment of the thoracic vertebra. The apparatus may comprise a cannula and an obturator, for example. In use, the obturator may be initially disposed within a lumen of the cannula to facilitate insertion of the introducer apparatus to the target treatment site. Once the introducer apparatus has been properly positioned, the obturator may be removed and replaced within the cannula lumen by the electrosurgical device. Thus, rather than inserting and positioning the electrosurgical device as described hereinabove, the user may insert and position an introducer apparatus as described hereinabove. The user may then remove the obturator from the cannula, and insert the electrosurgical device through the cannula. For example, in the embodiment shown in FIG. **4**, the user may insert an introducer apparatus such that it is generally upstanding relative to the superolateral aspect **318** of the transverse process **306**, and advance the introducer apparatus until the distal end of the obturator contacts the superolateral aspect **318** of the transverse process **306**. The user may then withdraw the obturator from the cannula, and insert electrosurgical device **400** into the cannula, such that energy delivery portion **402** is at or adjacent target site **310**. In embodiments wherein an introducer apparatus is not used, electrosurgical device **400** may have a substantially sharp tip, and thus may be inserted and positioned as shown in FIGS. **4-7**.

In some particular embodiments, wherein an introducer apparatus is used, the introducer apparatus and the electrosurgical device may be structured such that the obturator protrudes a greater distance from the distal end of the cannula than the electrosurgical device does, when fully inserted through the cannula, as described in U.S. patent application Ser. No. 11/733,515 (filed on Apr. 10, 2007), incorporated herein by reference. In such an embodiment, the introducer apparatus may be advanced until the distal end of the obturator contacts bone, for example the superolateral aspect **318** of the transverse process. The obturator may then be removed from the cannula, leaving the cannula in place, and the electrosurgical device may be inserted into the cannula. Due to the difference in length of the obturator and the electrosurgical device, when the electrosurgical device is fully inserted into the cannula, a gap will exist between the distal end of the electrosurgical device and the transverse process. The existence of this gap may ensure that when energy is delivered from the electrosurgical device, the lesion created does not extend too deeply into the bone thus limiting any unwanted necrosis of the bone. In addition, such an embodiment may allow for fluoroscopic visualization of an intended location of lesion formation, as is further detailed in U.S. patent application Ser. No. 11/733,515 (filed on Apr. 10, 2007), previously incorporated herein by reference. In one example of this embodiment the difference in the length of the electrosurgical device and the obturator is between about 0.5 mm to about 4 mm. Hence the energy delivery portion of the electrosurgical device is located at a distance of about 0.5 mm to about 4 mm away from the transverse process. In one particular example, the distance between the energy delivery portion and the transverse process is about 2 mm.

In some embodiments a marker may be used to assist in positioning an introducer apparatus. In some embodiments the marker may be used to position an electrosurgical device. The marker may be used in medical procedures requiring real-time imaging to aid in the positioning of medical devices at locations within a patient's body. More specifically, the marker may be used in regions of the body having few anatomical structures (such as bone) that are visible during imaging. In these body regions a landmark is not available to assist in positioning the device. Thus, while positioning an electrosurgical device, it may be difficult to ascertain if the device has penetrated a region of the body other than the target location. In some medical procedures, it is critical to avoid certain anatomical structures that are in close proximity to the target site. Thus, use of a marker to position the device may make the procedure safer and more effective. In some embodiments, the marker is a needle. More specifically, the needle, in some embodiments, is a finder needle. In other embodiments the needle may be a spinal needle. The needle can be inserted into the patient's body such that the distal end of the needle marks a target location. The needle may partially or fully comprise a radiopaque material. For example, in one embodiment the needle may comprise a radiopaque marker band at its distal end. The band may comprise of a radiopaque material such as platinum or tungsten. In other embodiments the needle may comprise stainless steel. When viewed under imaging, an electrosurgical device such as probe can then be advanced towards the needle such that an energy delivery

portion of the device is positioned at or near the distal end of the needle, for example at a distance from a region of the thoracic vertebra. In one example, as described hereinabove, the energy delivery portion of the electrosurgical device is at its distal tip.

Referring specifically now to FIGS. **8**A-**8**B, in one embodiment, a spinal needle **800** may be used to guide the placement of the probe at the superolateral aspect **318** of the transverse process as illustrated in FIGS. **8**A-**8**B. The distal end of the needle contacts a point **802** on the superior lateral outer third **804** on the posterior surface of the transverse process substantially towards the superior margin. More generally the needle is placed in the superior lateral quadrant of the transverse process. Before placement of the needle, the Anterior-Posterior image is aligned with the desired vertebral level using an imaging modality. In one example standard X-ray fluoroscopy is used. The needle which can be a thin spinal needle is placed on the patient's skin at a point above the superior lateral outer third **804** of the transverse process **806**. The needle is then inserted into the patient's skin, and advanced until the tip **808** touches the transverse process **806**. A lateral image is then obtained and placement of the needle ensures that the desired depth of the insertion of the probe is visible and is marked by the tip of the needle.

Once the needle has been positioned at the desired target location on the superior lateral quadrant of the transverse process, a medical instrument, for example, an introducer is used to find a suitable skin insertion point. The skin is nudged or depressed slightly using the instrument in order to visualize the insertion point using the lateral view. Using live fluoroscopy the angle of the introducer is adjusted until the tip **808** of the spinal needle is in the projected path of the introducer. The introducer is then removed and an introducer apparatus is inserted at the insertion site and its angle is adjusted such that the distal end of the introducer apparatus is targeted at the needle tip **808**. The introducer apparatus is then advanced towards the tip of the spinal needle. The spinal needle helps prevent the device from being advanced further than the target site and reduces the risk of pleural puncture. In another example of the present embodiment the finder needle may be positioned on the lateral edge of the transverse process.

The introducer apparatus is of the kind discussed previously in FIG. **4** and comprises an obturator **904** within the cannula **912**. In one example of the present embodiment as illustrated in FIG. **9**A, after the spinal needle has been positioned at the superior-lateral aspect of the transverse process, the C-arm is rotated 45° cranially. Using a gun barrel approach, the introducer apparatus is advanced towards the tip **808** of the spinal needle under an Anterior-Posterior view. The apparatus is advanced until the obturator **904** touches the superior-lateral corner **918** of the transverse process **906** in proximity to the tip **808** of the spinal needle. After introducer placement, a lateral view is obtained to confirm appropriate positioning and depth.

The obturator is then removed and an electrosurgical device **900** is inserted into the cannula. The electrosurgical device protrudes a lesser distance from the distal end of the cannula than the obturator as shown in FIGS. **9**B and **9**C. As a result the distal tip **902** of the electrosurgical device is positioned a distance away from the superior-lateral aspect of the transverse process. Hence, the difference between the length of the obturator **904** and the electrosurgical device **900**, automatically positions the device **900** such that the lesion forms at least partially in the intertransverse space. Energy is delivered from the distal tip of the device and the device is cooled, such that a lesion forms at least substantially distal to the distal tip **902** of the device. In one example the lesion is formed between the device distal tip **902** and the superior-lateral aspect. Additionally, use of the needle reduces the risk of pleural puncture as the device is not advanced past the distal end of the needle. In some embodiments an electrosurgical device may be inserted directly without the aid of an introducer apparatus. The electrosurgical apparatus may be positioned in a similar manner described above for the introducer apparatus with the aid of a spinal needle.

Various embodiments of the method of the present invention will be presently described, referring to various points/angles of insertion as well as various desired positions of the energy delivery portion of the electrosurgical device.

In some embodiments of the present invention an electrosurgical device may be inserted to the superior-lateral corner of the transverse process, as shown in FIG. **4**. In some embodiments the electrosurgical device is inserted with the aid of an introducer apparatus as discussed previously herein. In some embodiments the patient may be placed in the prone position in preparation for the treatment procedure. The user may optionally administer various treatments, such as anesthetics or antibiotics, for example. In addition, as described above, the user may optionally insert a spinal needle into the patient's body, at the lateral edge of the transverse process, in order to act as a visual marker when the patient's body is visualized from angles other than the anterior-posterior view using a medical imaging system, for example a fluoroscopic system. The user may then insert at least one electrosurgical device **400**, having an energy delivery portion **402**, percutaneously toward the target site. In some embodiments, electrosurgical device **400** may be probe **100** described hereinabove. In other embodiments, electrosurgical device **400** may be, for example, an alternate device as described in U.S. patent application Ser. No. 11/457,697, previously incorporated herein by reference.

Prior to inserting electrosurgical device **400** into the patient's body, electrosurgical device **400** may be positioned at a point of insertion on a surface of the patient's body, for example on the dorsal surface. In one embodiment, the point of insertion on the patient's body may be the region that is substantially laterally aligned with a location medial to a lateral edge of the transverse process of the underlying thoracic vertebra.

When the electrosurgical device **400** has been positioned at the point of insertion, the electrosurgical device **400** may be inserted into the body. In one embodiment, electrosurgical device **400** may be inserted such that at least a portion of the electrosurgical device is generally upstanding relative to a superolateral aspect **318** of a transverse process **306** of a thoracic vertebra. As used herein, the term 'generally upstanding' refers to an angle that is between about 45° and about 135° from the horizontal plane. More specifically, in some embodiments, the term 'generally upstanding' may refer to an angle of between about 75° and about 105° from the horizontal plane. In some particular embodiments, the term 'generally upstanding' may refer to an angle of about 90° from the horizontal plane. In some embodiments, wherein the electrosurgical device is bent or curved, as described in U.S. patent application Ser. No. 11/457,697 (filed on Jul. 14, 2006), previously incorporated herein by reference, the portion of the electrosurgical device that is distal to the bend or curve may be generally upstanding relative to the superolateral aspect **318** of the transverse process **306**. In order to position electrosurgical device **400** such that it is generally upstanding relative to a superolateral aspect **318** of a transverse process **306** of a thoracic vertebra, electrosurgical device **400** may be angled such that it is oriented substantially away from an anterior-posterior (AP) axis **450** of the body, in

a substantially cranial direction. In some embodiments, the electrosurgical device may be oriented at an angle of between about 15° and about 60° away from the AP axis in a substantially cranial direction. More specifically, electrosurgical device **400** may be oriented at an angle of about 45° away from the AP axis, in a substantially cranial direction. Electrosurgical device **400** may be advanced until it contacts the superolateral aspect of the transverse process, such that energy delivery portion **402** is in proximity to the target site **310**. The energy delivery portion is positioned at a distance from the superior-lateral aspect of the transverse process. In one embodiment an energy delivery portion of the electrosurgical device is positioned wherein is positioned at a location in the region bounded by a superior margin of the transverse process, an inferior margin of a superjacent transverse process, an anterior margin of the transverse process and an anterior margin of the superjacent transverse process, a posterior margin of a spinous process of the thoracic vertebra, an inferior articular process of the thoracic vertebra and a superior articular process of a superjacent thoracic vertebra, a lateral margin of the transverse process and a lateral margin of the superjacent transverse process.

When energy is applied to the energy delivery portion and it is substantially cooled, a lesion forms substantially distal to the energy delivery portion. The lesion is formed such that a significant portion of the lesion forms distal to the energy delivery portion.

Referring to FIGS. **5**A-**5**C, in an alternate embodiment, electrosurgical device **400** may be inserted into the patient's body such that it is substantially aligned with the AP axis **450** of the patient's body. In such an embodiment, electrosurgical device **400** may be inserted until the distal end contacts the centroid region **314** of the transverse process **306**, as shown in FIG. **5**A. In some embodiments and introducer apparatus may be used in order to position the electrosurgical device as discussed herein above. When electrosurgical device **400** contacts the centroid region **314** of the transverse process **306**, a depth stopper **415**, shown in FIG. **5**B, may be placed on electrosurgical device **400** at the position on electrosurgical device **400** that is adjacent to the surface of the patient's skin (not shown). Electrosurgical device **400** may then be withdrawn slightly, for example by about 1 mm to about 5 mm. The user may then move electrosurgical device **400** in a substantially cranial direction until the distal end of electrosurgical device **400** is adjacent the superolateral aspect **318** of the transverse process **306**. In other words, the user may "walk" the electrosurgical device in the cranial direction, until the distal end of the electrosurgical device slips over the superolateral aspect **318** of transverse process **306**. The electrosurgical device may then be advanced slightly, until depth stopper **415** on electrosurgical device **400** is again adjacent the surface of the patient's skin, as shown in FIG. **5**C, such that an energy delivery portion, for example the energy delivery portion **402** is in proximity to a target site. The electrosurgical device is positioned such that the energy delivery portion is positioned at a distance from the superolateral aspect. Energy is delivered from the energy delivery portion and the energy delivery portion is substantially cooled such that a lesion forms substantially distal to the energy delivery portion.

Alternatively, in some such embodiments, a user may insert a second electrosurgical device into the patient's body, at the vertebra that is immediately superior to the vertebra where the first electrosurgical device was inserted. For example, if the first electrosurgical device was inserted at T5, the second electrosurgical device may be inserted at T4. The second electrosurgical device may be inserted in the same manner as described with reference to FIGS. **5**A-**5**C; however, rather than walking the second electrosurgical device in a cranial direction, the second electrosurgical device **500** may be walked in a caudal direction until the second electrosurgical device begins to slip over the inferolateral aspect **312** of the transverse process as shown in FIG. **5**D. Thus, the first and second electrosurgical devices will be positioned at either end of an intertransverse space of adjacent vertebrae. In such an embodiment, energy may be delivered in a bipolar manner, such that a lesion **504** forms substantially between the first electrosurgical device and the second electrosurgical device. In some embodiments, the order of insertion is reversed, i.e. the first electrosurgical device is inserted to a thoracic vertebra and walked in a caudal direction and the second electrosurgical device is inserted to the immediately inferior vertebra and is walked in a cranial direction.

In a further alternate embodiment, electrosurgical device **400** may be inserted into the patient's body such that it is tilted substantially away from the AP axis **450** of the patient's body, in a substantially caudal direction. In some embodiments, the electrosurgical device may be oriented at an angle of between about 15° and about 60° away from the AP axis **450** in a substantially caudal direction. More specifically, electrosurgical device **400** may be oriented at an angle of about 45° away from the AP axis, in a substantially caudal direction. In such an embodiment, electrosurgical device **400** may be inserted until the distal end contacts the centroid region **314** of the transverse process **306**. When electrosurgical device **400** contacts the centroid region **314** of the transverse process **306**, a depth stopper **415** may be placed on electrosurgical device **400** at the position on electrosurgical device **400** that is adjacent to the surface of the patient's skin (not shown). Electrosurgical device **400** may then be withdrawn slightly, for example by about 1 mm to about 5 mm. The user may "walk" the electrosurgical device in the cranial direction, until the distal end of the electrosurgical device begins to slip over the superolateral aspect **318** of transverse process **306**. The electrosurgical device may then be advanced slightly, until depth stopper **415** on electrosurgical device **400** is again adjacent the surface of the patient's skin. Due to the caudal tilt of electrosurgical device **400**, energy delivery portion **402** will extend substantially into the intertransverse space such that it is positioned at a distance from the superior-lateral aspect. After positioning the device, energy is delivered from the energy delivery portion and the energy delivery portion is cooled, such that a lesion forms at least substantially distal to the energy delivery portion.

The introducer apparatus discussed previously may be particularly useful in the embodiment described above wherein the electrosurgical device is oriented caudally away from the AP axis **450** of the patient's body, inserted towards the centroid of the transverse process, and walked cranially such that the energy delivery portion extends into the intertransverse space. Similar to the embodiments disclosed previously, the use of a longer obturator to position the cannula helps to minimize the depth into the intertransverse space to which the electrosurgical device extends, thus providing a safer procedure. In other words, the cannula and obtruator are inserted until the obturator contacts the centroid, at which point a depth stopper may be positioned on the cannula at the patient's skin. The introducer apparatus (i.e. the cannula and obturator) is then walked cranially until the intertransverse space is reached. The obturator is then removed, leaving the cannula in place. When the electrosurgical device is thereafter inserted through the cannula, it will not extend substantially into the intertransverse space, since it is shorter than the obturator, thus resulting in a safer procedure. In some

embodiments the electrosurgical device is about 0.5 to about 5 mm shorter than the obturator. Thus, the use of an obturator that is longer that the electrosurgical device, allows for the positioning of the electrosurgical device at a distance away from a segment of a thoracic vertebra in accordance with the embodiments of the present invention. In one example the difference in the length of the obturator and the electrosurgical device is about 2 mm, allowing for the positioning of the electrosurgical device at a distance of about 2 mm from the superior-lateral aspect.

In an alternate embodiment, the target site **310** may not be the superolateral aspect **318** of the transverse process and the region immediately superior thereto. Rather, the target site **310** may be the lamina **316** of the vertebra **300**, as shown in FIG. **6**, where the medial branch of the dorsal rami branches into the ascending and descending branches of the dorsal rami. Referring to FIG. **7**, wherein a thoracic vertebra is shown from a cranial view looking along the coronal plane, in this embodiment, the electrosurgical device **400** may be inserted into the patient's body such that it is generally upstanding relative to the lamina **316** of the vertebra **300**. In some embodiments an electrosurgical device may be positioned with the aid of an introducer apparatus as discussed previously. In order to position electrosurgical device **400** such that it is generally upstanding relative to the lamina **316** of the thoracic vertebra **300**, electrosurgical device **400** may be angled such that it is oriented substantially away from an anterior-posterior (AP) axis **450** of the body, in a substantially lateral direction. In some embodiments, the electrosurgical device may be oriented at an angle of between about 15° and about 65° away from the AP axis in a substantially lateral direction. More specifically, electrosurgical device **400** may be oriented at an angle of about 45° away from the AP axis, in a substantially lateral direction. Electrosurgical device **400** may then be inserted until it contacts the lamina **316**. This embodiment may be useful in cases where the user is particularly concerned about causing pneumothorax in the patient. That is, since the electrosurgical device is directed at the lamina **316**, and not towards the intertransverse space, there may be a decreased risk of accidentally puncturing the pleural sac of the patient.

In an alternate embodiment, a user may insert a second electrosurgical device into the patient's body. The second electrosurgical device may be inserted at the same vertebral level as the first electrosurgical device. In such an embodiment, the second electrosurgical device may be inserted in the same manner as described hereinabove with reference to FIG. **7**; however, the second electrosurgical device may be inserted such that it is positioned at a distance from the first electrosurgical device. For example, the first electrosurgical device may be positioned as described above with reference to FIG. **7**, and the second electrosurgical device may be positioned superior to the first electrosurgical device, at a distance of between about 0.1 cm to about 2 cm away from the first electrosurgical device. In some particular embodiments, the first and second electrosurgical devices are positioned about 1 cm apart from each other. In these embodiments, energy may be delivered in a bipolar manner, such that a lesion forms substantially between the first electrosurgical device and the second electrosurgical device.

The steps of inserting and positioning electrosurgical device **400** may optionally be followed, for example prior to the commencement of the step of delivering energy, by any number of steps, including, but not limited to, one or more of: measuring one or more properties of a device or of tissue at or near the target treatment site; applying a stimulation signal to a tissue (for example, neural tissue) at or near the target treatment site; measuring the reaction to stimulation (for example, the somato-sensory evoked potential, or SSEP) of a tissue (for example, muscular or neural tissue) in response to the application of a stimulation signal at or near the target treatment site; inserting or removing material at or near the target treatment site; and performing another treatment procedure at or near the target treatment site. Further details regarding these steps may be found in U.S. patent application Ser. No. 11/105,527 (filed on Apr. 14, 2005), Ser. No. 11/280,604 (filed on Nov. 15, 2005), Ser. No. 11/356,706 (filed on Feb. 17, 2006), Ser. No. 11/381,783 (filed on May 5, 2006), and Ser. No. 11/368,509 (filed on Mar. 7, 2006). Following the performance of one or more of the above optional steps, electrosurgical device **400** may be reinserted, moved, or otherwise repositioned and any optional steps may then be repeated.

In some embodiments, the step of delivering energy involves the creation of a lesion **404** at or adjacent to the superolateral aspect of the transverse process, or alternatively, the creation of a lesion **704** at the lamina of the vertebra. In any embodiments, as described hereinabove, the lesion may be created substantially distal to an energy delivery portion of the energy delivery device. Such lesions may be effective to alter a function of at least a portion of a medial branch of a dorsal ramus nerve. In some embodiments, the energy is delivered as radiofrequency electrical current having a frequency of between about 10 kHz and about 1000 kHz, at a power of about 50 W, may be delivered to the probe.

In embodiments of the present invention, the step of delivering energy to the tissue is preceded by, and/or performed at least partially concurrently with, a step of cooling the energy delivery portion of the electrosurgical device. As described hereinabove, in some embodiments, cooling may be achieved via the internal circulation of a fluid within electrosurgical device **400**. In other embodiments, other means for cooling may be used, as described in U.S. patent application Ser. No. 11/457,697, previously incorporated herein by reference. Cooling may be used to reduce the temperature of the tissue in the vicinity of the site of energy delivery, allowing more energy to be delivered without causing an increase of temperature in surrounding tissue to an unsafe level. The delivery of more energy allows regions of tissue further away from the energy delivery portion to reach a temperature at which a lesion can form, thus increasing the maximum size/volume of the lesion. Furthermore, depending on the structure of the electrosurgical device, cooling may allow for a lesion to form at a position that is substantially distal to and, in some embodiments, spaced from the energy delivery portion. In some embodiments, again depending on the structure of the electrosurgical device, the lesion may from more in one direction than in another direction. For example, the lesion may form substantially distal to the energy delivery portion or may form substantially in another direction, depending on the structure of the electrosurgical device. Thus, cooling an electrosurgical probe may change the size, shape, and location of formation of a lesion. The lesion may be oblong or spherical in shape. In other embodiments the lesion may have a non-uniform shape.

In further embodiments, the step of cooling the electrosurgical device may be performed in a pulsed or intermittent manner. This may allow for a more accurate measurement of tissue temperature by a temperature sensing device associated with the electrosurgical device. For example, in embodiments wherein the electrosurgical device is cooled via the internal circulation of a cooling fluid delivered by a pump, the pump may be operated in a pulsed or intermittent manner. When the pump is 'on', fluid will circulate within the elec-

trosurgical device, and the electrosurgical device and surrounding tissue will be cooled; when the pump is 'off', fluid will not circulate within the electrosurgical device, and heat from the tissue in the vicinity of the electrosurgical device may conduct back towards the electrosurgical device, causing the electrosurgical device to heat to a temperature that is more indicative of the temperature of the tissue in the vicinity of the electrosurgical device. The temperature sensing device may sense this temperature, and may thus give a more accurate reading of the temperature of the tissue in the vicinity of the electrosurgical device. When the pump returns to the 'on' position, the electrosurgical device will again be cooled, and the tissue adjacent the electrosurgical device will return to a cooler temperature. The pulsing of the pump may coincide with pulsing of energy delivered to the electrosurgical device, described further hereinbelow, such that cooling is only supplied to the electrosurgical device while energy is being delivered.

In some embodiments, the active cooling of the electrode may be modulated during energy delivery (and in some cases, accompanied by a modulation of energy delivery), for example as follows: energy may be delivered initially in conjunction with cooling of the electrode so that a lesion begins to form at some distance distally spaced apart from the electrode; cooling may then be reduced, causing the lesion to extend at least partially in the direction of the electrode. Thus, a further feature of some embodiments of the present invention involves the control of cooling parameters in order to create a lesion at a desired location relative to the electrode. Further details regarding this feature are found in U.S. patent application Ser. No. 11/457,697, previously incorporated herein by reference. For example, an 18 AWG probe having an exposed distal tip about 1.5 mm to about 2 mm in length and being cooled by a cooling fluid having a temperature of less than 30 degrees Celsius at a rate of at least 10 mL/minute, will form a lesion about 1.5 mm distal to the electrode tip. As the cooling is decreased, for example by lowering the fluid flow rate, the lesion will form closer to the probe tip. The parameters of cooling may be adjusted before, during or after energy delivery.

In some embodiments wherein the degree of cooling is modified during the course of a treatment procedure, the amount or degree of cooling supplied to the electrosurgical device may be controlled actively by a user by modifying a flow-rate, or a temperature of the cooling fluid. For example, a temperature measured at the distal region of the electrosurgical device may be displayed on a screen or other display means. Based on this temperature, a user may desire to increase the amount of cooling supplied to the electrosurgical device, for example if the temperature is above a certain threshold level. The user may, in some embodiments, adjust the amount of cooling supplied by increasing the flow-rate of cooling fluid. This may be accomplished by turning a knob on a pump, for example, or by opening a valve. In other embodiments, the control of cooling may be passive and/or automatic. For example, a computer may automatically adjust a fluid flow-rate based on a temperature measured at the distal region of the electrosurgical device. In another example, a fluid flow-rate may be fixed during the course of a treatment procedure, and may not be modified.

In some embodiments, after the creation of a lesion, electrosurgical device **400** may be repositioned, and energy may again be delivered in order to form one or more further lesions. For example, after the formation of a first lesion, the electrosurgical device **400** may be withdrawn from the target site either partially or fully. In the case of partial withdrawal, energy may be delivered to the site at which the electrosurgical device **400** has been withdrawn to, such that a second lesion is formed. In the case of full withdrawal, electrosurgical device **400** may be re-inserted and re-positioned at a second location, and energy may be delivered to the second location to form a further lesion. The step of repositioning may be performed any number of times, to form any number of lesions, as determined by a user. In embodiments comprising a steerable electrosurgical device, the electrosurgical device may be repositioned without withdrawing the probe, by actuating the steering means associated with the probe.

In some embodiments, any or all of the method steps described above may be performed with the aid of imaging. For example, the step of inserting electrosurgical device **400** may be performed under X-ray fluoroscopic guidance. In a further embodiment, the imaging may be performed in a gun-barrel manner, wherein the device is visualized along its longitudinal axis.

In some embodiments, rather than being delivered in a continuous manner, energy may be delivered in a series of amplitude or frequency modulated pulses, whereby tissue heating is inhibited by interrupting periods of energy delivery with periods in which energy is delivered at a lower voltage. In one specific embodiment, energy is delivered according to a set duty cycle of signal on time/off time, wherein the signal is 'on' less than 100% of the time, as follows: during signal 'on time' energy is delivered at a voltage that may beneficially be higher than voltages that can safely be used during continuous energy delivery (100% duty cycle) procedures; during signal 'off time', the heat generated in the vicinity of the probe may disperse throughout the tissue, raising the temperature of tissue away from the probe, while tissue in the vicinity of the probe drops; energy is again applied and the delivery is cycled through 'on time' and 'off time' until a predetermined endpoint (e.g. time or temperature) is reached or until a practitioner decides to end the treatment. The reduction in temperature of tissue in the vicinity of the electrode during signal 'off time' may allow a higher voltage to be used (during 'on time'), than would tend to be used in a continuous energy delivery procedure. In this way, the pulsing of energy delivery, either between signal 'on time' and 'off time', as described above, or between a higher voltage and a lower voltage (for example, a voltage capable of generating a lesion in the tissue and a voltage not capable of generating a lesion in the tissue, given the frequency of energy being delivered), the total amount of current deposited into the tissue may be sufficient to create a larger lesion, at a further distance from the probe, than would be possible using continuous energy delivery without maintaining the tissue in the vicinity of the probe at a temperature that may cause charring. As mentioned hereinabove, the creation of a larger lesion is beneficial as it would require relatively less insertion and energy delivery steps in order to adequately treat the tissue.

Depending, for example, on the configuration and positioning of the electrosurgical device **400**, as well as the degree of cooling supplied to the electrosurgical device **400**, the lesion formed at the target site **310** may be of a variety of shapes and sizes. As described in U.S. patent application Ser. No. 11/457,697, previously incorporated herein by reference, lesion shape and location may be affected by the length of the energy delivery portion, for example an active electrode, of the electrosurgical device. The shorter the active electrode, the more distally, relative to the electrosurgical device, the lesion will form. In addition, the shape of the lesion will be generally more spherical if less of the active electrode is exposed. For example, if the exposed length of the distal end is limited substantially to the distal-most hemisphere, i.e. the face, of the tip, then a substantially spherical lesion may form

primarily distally with respect to the electrosurgical device. Conversely, if more of the tip is exposed, then the lesion will appear more oblate and may form more radially (i.e. perpendicular to the longitudinal axis of the electrosurgical device) around the distal end and the component of the lesion distal to the distal end will decrease. Thus, depending on the size and shape of the active electrode of the electrosurgical device, the size and shape of the lesion may vary. For example, as shown in FIG. **4**, in embodiments wherein the active electrode **402** of electrosurgical device **400** extends proximally along the length of the probe for a small distance, for example between about 2 mm and about 7 mm, and with a sufficient amount of cooling, for example between about 10 ml/min and about 25 ml/min, lesion **404** may form around the conductive portion as well as distal to the probe. Because lesions formed by this method may be substantially large, for example between about 100 mm^3 and about 1200 mm^3 in volume, this method may be particularly useful for lesioning of the nerves of the medial branch of the dorsal ramus at the thoracic region of the spine. In some embodiments the lesion formed may be greater than 1200 mm^3.

In accordance with the methods outlined in the present disclosure, the electrosurgical device or probe is positioned near the course of the target nerve. When energy is applied through the probe tip a lesion forms that blankets around the edges of the bone. In one embodiment the lesion is limited to the dorsal rami and the nerve root and the lateral branch of the dorsal root remain unaffected. In the upper and lower section of the thoracic spine from T1-T4 and T9-10, the medial branch of the dorsal ramus nerve crosses the superior-lateral portion of the transverse process and the variability decreases near the bone. Hence a smaller tip size is sufficient to create an effective lesion. In one embodiment as indicated in FIG. **12**, the probe tip **1200** is about 3.5 mm and forms a lesion **1202** with a diameter of about 8 mm. The lesion **1202** forms substantially distal to the probe tip **1200**. The lesion may form between the probe tip **1200** and a segment of the thoracic vertebra. In one example the segment of the thoracic vertebra is the transverse process. More specifically, the segment is the superior-lateral aspect of the transverse process. The distal projection **1204** of the lesion is about 4 mm from the probe tip with a lesion volume of about 270 mm^3. The distal projection is defined as the distance between the probe tip and the distal edge of the lesion. In alternate embodiments the lesion diameter can be about 6 mm to about 10 mm. In some embodiments the lesion diameter can be larger than 10 mm. In one example of embodiment of the present invention the electrosurgical device **900** is inserted at the T4 vertebral level as indicated in FIG. **10**. In another example the device **900** is inserted at the T10 vertebral level as shown in FIG. **11**

In the mid thoracic region from T5-T9, there is a greater variability in the path of the target nerve as the medial branch of the dorsal ramus cross through the intertransverse space. Hence, an electrosurgical device with a larger tip size is required in order to effectively lesion the target nerve. In one embodiment the probe tip **1300** is about 5 mm and lesion **1302** has a diameter of about 12 mm. The lesion **1300** forms substantially distal to the probe tip **1300**. The lesion may form between the probe tip **1300** and a segment of the thoracic vertebra. In one example the segment of the thoracic vertebra is the transverse process. More specifically the segment is the superior-lateral aspect of the transverse process. The distal projection **1304** is about 5 mm from the probe tip with a lesion volume of about 900 mm^3. In another example of the present embodiment the lesion size may vary from about 8 mm to about 16 mm. In some embodiments the lesion size may be greater than 16 mm in diameter. In one example of embodiment of the present invention the electrosurgical device **900** is inserted at the T6 vertebral level as shown in FIG. **11**.

Thus, embodiments of the present invention allow for the treatment of a thoracic region of a patient's body. Particularly, methods of the present invention may be used to create a lesion at a medial branch of a thoracic dorsal ramus, for example in order to treat pain or other pathologies involving the medial branch.

As described hereinabove, embodiments of a method of the present invention allow for the creation of a lesion between an energy delivery portion of an electrosurgical device and some predetermined location, such as a segment of a thoracic vertebra. For example, a lesion may be created substantially distal to the energy delivery portion by delivering energy to the energy delivery portion and cooling the energy delivery portion. This provides an advantageous benefit not found in the prior art, in that it obviates the need for a probe to be placed in very close proximity to a target nerve in order to effectively lesion the target nerve

Some embodiments of the method comprise positioning an energy delivery portion of an electrosurgical device to face a segment of a thoracic vertebra at a distance from the segment; and cooling the energy delivery portion and delivering energy through the energy delivery portion. In some embodiments a lesion is formed at least substantially distal to the energy delivery portion. In some embodiments the lesion is formed at a location at least between the energy delivery portion and the segment of the thoracic vertebra.

In some particular embodiments, the electrosurgical device may be inserted and positioned in a manner that is relatively safe, effective, and efficient. In addition, embodiments of the present invention allow for the creation of a relatively larger lesion than previously possible, thereby reducing the amount of lesions that must be created in order to sufficiently treat the patient.

Embodiments of the invention described above are intended to be exemplary only. The scope of the invention is therefore intended to be limited solely by the scope of the appended claims.

It is appreciated that certain features of the invention, which are, for clarity, described in the context of separate embodiments, may also be provided in combination in a single embodiment. Conversely, various features of the invention, which are, for brevity, described in the context of a single embodiment, may also be provided separately or in any suitable subcombination.

Although the invention has been described in conjunction with specific embodiments thereof, it is evident that many alternatives, modifications and variations will be apparent to those skilled in the art. Accordingly, it is intended to embrace all such alternatives, modifications and variations that fall within the broad scope of the appended claims. All publications, patents and patent applications mentioned in this specification are herein incorporated in their entirety by reference into the specification, to the same extent as if each individual publication, patent or patent application was specifically and individually indicated to be incorporated herein by reference. In addition, citation or identification of any reference in this application shall not be construed as an admission that such reference is available as prior art to the present invention.

The invention claimed is:

1. A method of treatment of a thoracic region of a patient's body, the method comprising:

inserting an introducer apparatus into the patient's body at an upstanding angle relative to an anterior-posterior axis of the patient's body in a cranial direction, the apparatus

comprising a cannula and an obturator disposed within a lumen of the cannula, the obturator protruding from a distal end of the cannula;

positioning the apparatus such that a distal tip of the obturator abuts the superolateral aspect of the transverse process of the thoracic vertebra;

removing the obturator from within the cannula;

inserting an energy delivery portion of an electrosurgical device into the cannula;

positioning the energy delivery portion of the electrosurgical device at the superolateral aspect of the transverse process of the thoracic vertebra at a distance from the superolateral aspect of the transverse process; and

cooling the energy delivery portion and delivering energy through the energy delivery portion to the superolateral aspect of the transverse process such that a lesion is formed at least distal to the energy delivery portion.

2. The method of claim **1**, wherein the cooling and the delivering energy cooperate to form a lesion at a location at least between the energy delivery portion and the superolateral aspect of the transverse process of the thoracic vertebra.

3. The method of claim **1**, wherein the distance between the energy delivery portion and the superolateral aspect of the transverse process of the thoracic vertebra is 0.5 mm to 4 mm.

4. The method of claim **1**, wherein the distance between the energy delivery portion and the superolateral aspect of the transverse process of the thoracic vertebra is 2 mm.

5. The method of claim **1**, wherein the upstanding angle of the electrosurgical device comprises an angle of between 15° and 60° relative to an anterior-posterior axis of the patient's body in the cranial direction.

6. The method of claim **1**, wherein the upstanding angle of the electrosurgical device comprises an angle of 45° relative to an anterior-posterior axis of the patient's body in the cranial direction.

7. The method of claim **1**, wherein the upstanding angle of the electrosurgical device comprises an angle of 15° relative to an anterior-posterior axis of the patient's body in the cranial direction.

8. The method of claim **1**, wherein the energy delivery portion is positioned at a location in the region bounded by:

a superior margin of the transverse process,

an inferior margin of a superjacent transverse process,

an anterior margin of the transverse process and an anterior margin of the superjacent transverse process,

a posterior margin of a spinous process of the thoracic vertebra,

an inferior articular process of the thoracic vertebra and a superior articular process of a superjacent thoracic vertebra, and

a lateral margin of the transverse process and a lateral margin of the superjacent transverse process.

9. The method of claim **1**, wherein the superolateral aspect of the transverse process of the thoracic vertebra comprises a centroid region of a transverse process.

10. The method of claim **1**, further comprising positioning the introducer apparatus within an intertransverse space, prior to inserting the electrosurgical device within the cannula.

11. The method of claim **10**, the method further comprising:

placing a depth stopper on the cannula adjacent to the surface of the patient's skin and partially withdrawing the apparatus prior to moving the apparatus; and

advancing the apparatus until the depth stopper is adjacent to the patient's skin, after moving the apparatus.

12. The method of claim **1**, wherein positioning the introducer apparatus within the intertransverse space comprises:

moving the apparatus from the centroid region in a cranial direction until the intertransverse space is reached.

* * * * *