US009450981B2

(12) **United States Patent**
Doron et al.

(10) **Patent No.: US 9,450,981 B2**
(45) **Date of Patent: Sep. 20, 2016**

(54) **SYSTEM AND METHOD THEREOF FOR MITIGATING DENIAL OF SERVICE ATTACKS IN VIRTUAL NETWORKS**

(71) Applicant: **Radware, Ltd.**, Tel Aviv (IL)

(72) Inventors: **Ehud Doron**, Moddi'in (IL); **Avi Chesla**, Tel Aviv (IL)

(73) Assignee: **Radware, Ltd.**, Tel Aviv (IL)

(*) Notice: Subject to any disclaimer, the term of this patent is extended or adjusted under 35 U.S.C. 154(b) by 111 days.

(21) Appl. No.: **13/828,043**

(22) Filed: **Mar. 14, 2013**

(65) **Prior Publication Data**

US 2014/0283051 A1 Sep. 18, 2014

(51) **Int. Cl.**
H04L 29/06 (2006.01)
H04L 12/24 (2006.01)

(52) **U.S. Cl.**
CPC ***H04L 63/1458*** (2013.01); *H04L 12/2417* (2013.01); *H04L 12/2465* (2013.01); *H04L 12/2472* (2013.01)

(58) **Field of Classification Search**
CPC H04L 63/1458; H04L 12/2417; H04L 12/2465; H04L 12/2472
USPC 726/22
See application file for complete search history.

(56) **References Cited**

U.S. PATENT DOCUMENTS

7,436,770 B2 * 10/2008 Sterne et al. 370/235
8,549,646 B2 * 10/2013 Stavrou et al. 726/24
8,718,064 B2 * 5/2014 Beliveau et al. 370/392
8,909,800 B1 * 12/2014 Grebenschikov ... G06F 9/45558 709/223
2001/0010053 A1 7/2001 Ben-Shachar et al.
2003/0115480 A1 * 6/2003 McDysan 713/201
2005/0259646 A1 * 11/2005 Smith H04L 12/66 370/389
2007/0199061 A1 * 8/2007 Byres et al. 726/11
2007/0214505 A1 * 9/2007 Stavrou G06F 21/55 726/24
2008/0172539 A1 * 7/2008 Boss G06F 3/0605 711/165
2008/0222375 A1 9/2008 Kotsovinos et al.
2009/0037592 A1 * 2/2009 Lyon H04L 29/06027 709/228
2009/0094671 A1 * 4/2009 Kurapati H04L 63/1458 726/1
2009/0279444 A1 * 11/2009 Ravindran et al. 370/252
2010/0077395 A1 * 3/2010 Edwards H04L 12/66 718/1
2010/0333089 A1 * 12/2010 Talwar G06F 11/004 718/1
2012/0096459 A1 4/2012 Miyazaki
2012/0124306 A1 * 5/2012 Abercrombie G06F 11/1461 711/162
2012/0137292 A1 5/2012 Iwamatsu et al.
2012/0159634 A1 6/2012 Haikney et al.

(Continued)

OTHER PUBLICATIONS

Latanicki et al, "Scalable Cloud Defenses for Detection, Analysis and Mitigation of DDoS Attack", Towards the Future Internet, G. Tselentis et al. IOS Press, 2010, p. 127-137.*

Primary Examiner — Hadi Armouche
Assistant Examiner — Sher A Khan
(74) *Attorney, Agent, or Firm* — M&B IP Analysts, LLC

(57) **ABSTRACT**

A method for efficient mitigation of denial of service (DoS) attacks in a virtual network. The method maintains a security service level agreement (SLA) guaranteed to protected objects. The method includes ascertaining that a denial of service (DoS) attack is performed in the virtual network; checking if the DoS attack affects at least one physical machine hosting at least one protected object, wherein the protected object is provisioned with at least a guaranteed security service level agreement (SLA); determining, by a central controller of the virtual network, an optimal mitigation action to ensure the at least one security SLA guaranteed to the least one protected object; and executing the determined optimal mitigation action to mitigate the DoS attack, wherein the optimal mitigation action is facilitated by resources of the virtual network.

23 Claims, 4 Drawing Sheets

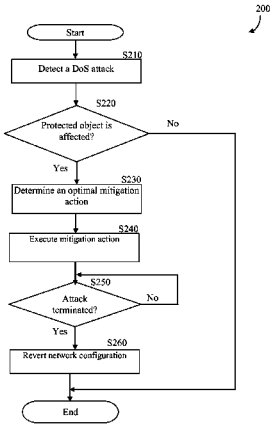

(56) **References Cited**

U.S. PATENT DOCUMENTS

2012/0185856 A1 7/2012 Ashihara et al.
2013/0055010 A1 2/2013 Kotha et al.
2013/0060940 A1* 3/2013 Koponen H04L 12/4633 709/225
2013/0070762 A1 3/2013 Adams et al.
2013/0124712 A1* 5/2013 Parker H04L 41/5038 709/224
2013/0134712 A1* 5/2013 Rodriguez Tsouroukdissian ... F03D 11/028 290/44
2013/0160008 A1* 6/2013 Cawlfield et al. 718/1
2013/0198845 A1* 8/2013 Anvari G06F 21/85 726/25
2013/0219043 A1* 8/2013 Steiner et al. 709/224
2013/0263256 A1* 10/2013 Dickinson et al. 726/22
2014/0204957 A1* 7/2014 Kanda et al. 370/431

* cited by examiner

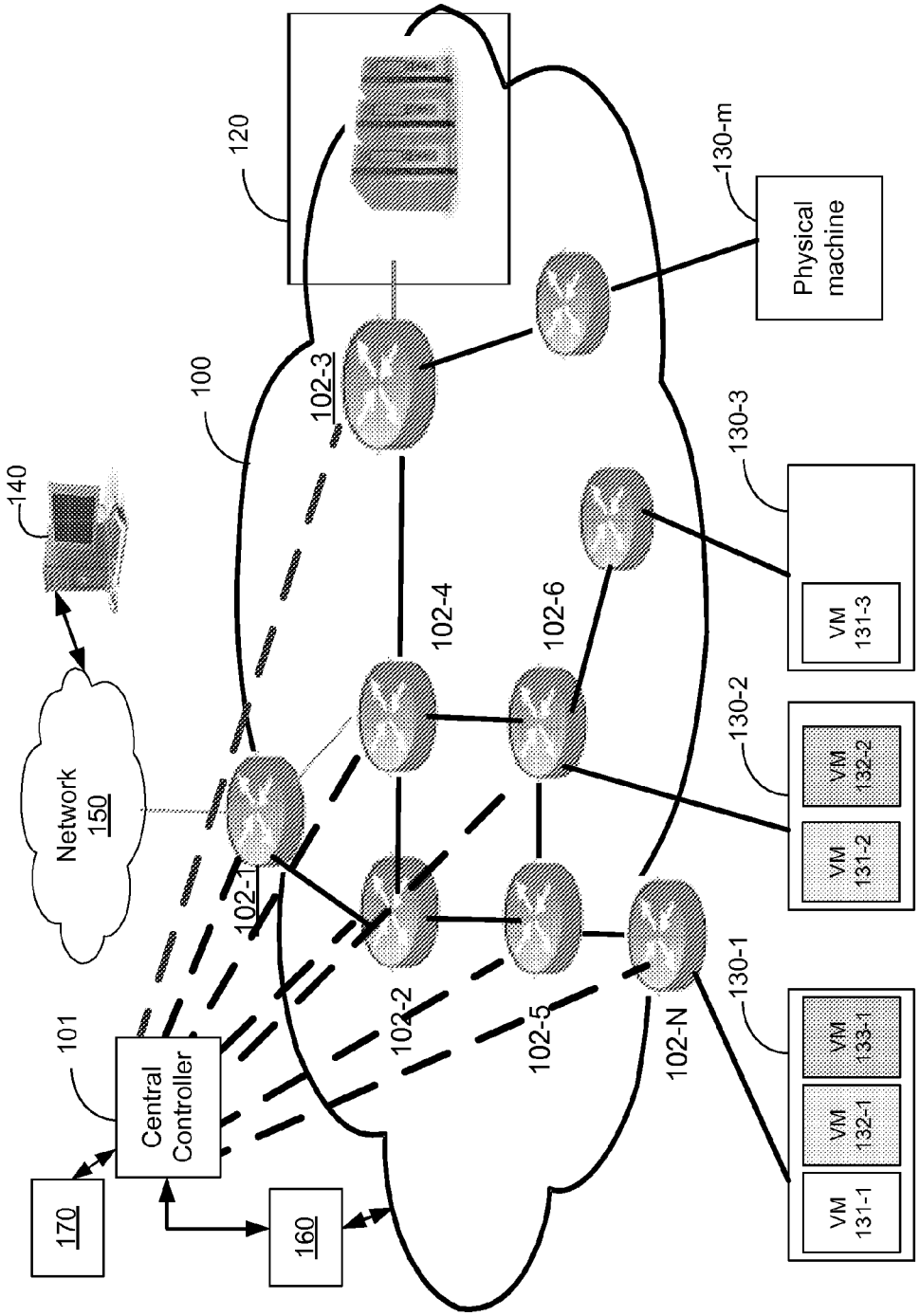
120
100
140
Network
150
101
Central
Controller
170
160
102-1
102-2
102-3
102-4
102-5
102-6
102-N
130-1
130-2
130-3
130-m
Physical
machine
VM
131-1
VM
132-1
VM
133-1
VM
131-2
VM
132-2
VM
131-3

FIG. 1

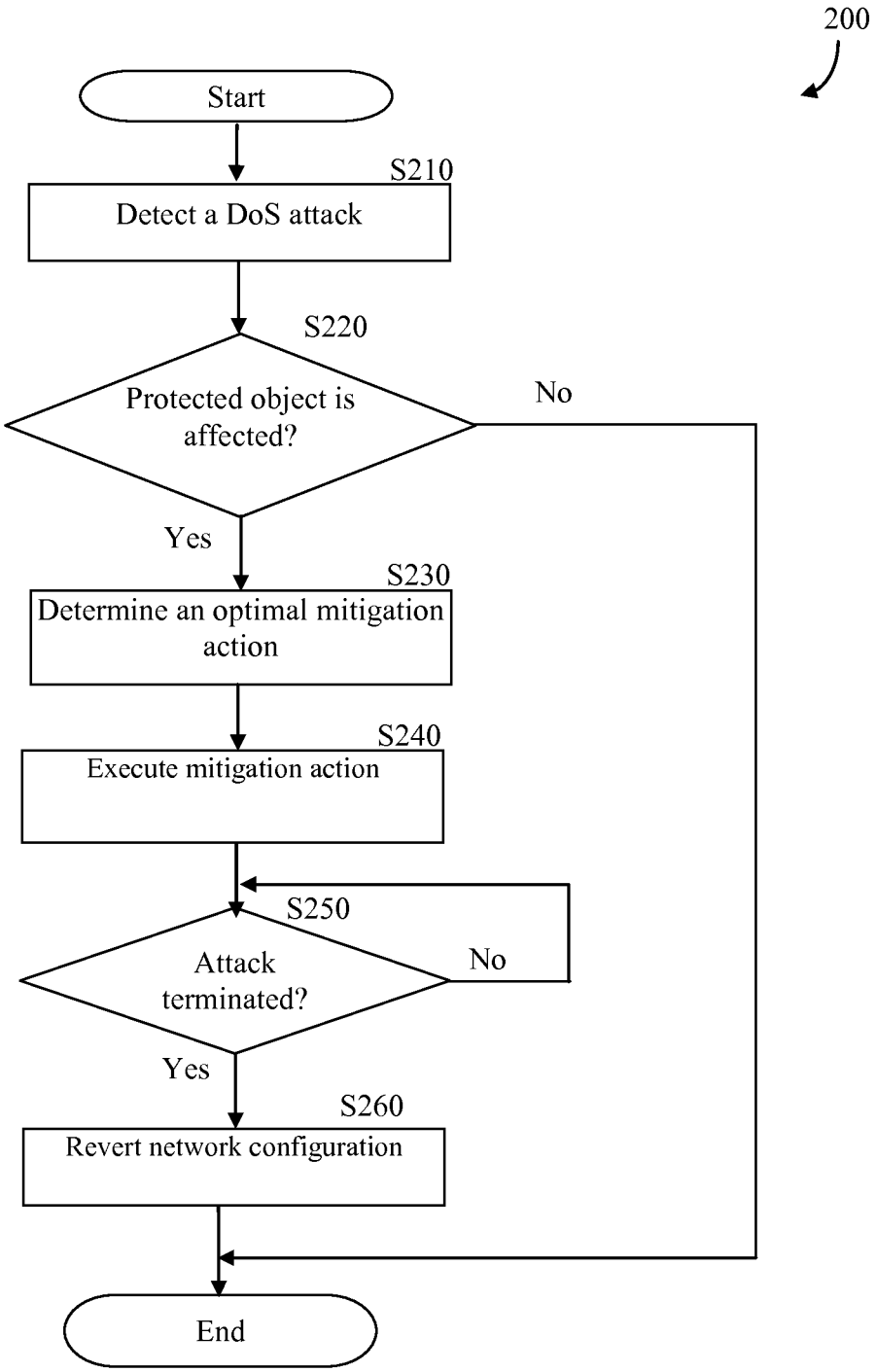
200
Start
S210
Detect a DoS attack
S220
Protected object is affected?
No
Yes
S230
Determine an optimal mitigation action
S240
Execute mitigation action
S250
Attack terminated?
No
Yes
S260
Revert network configuration
End

FIG. 2

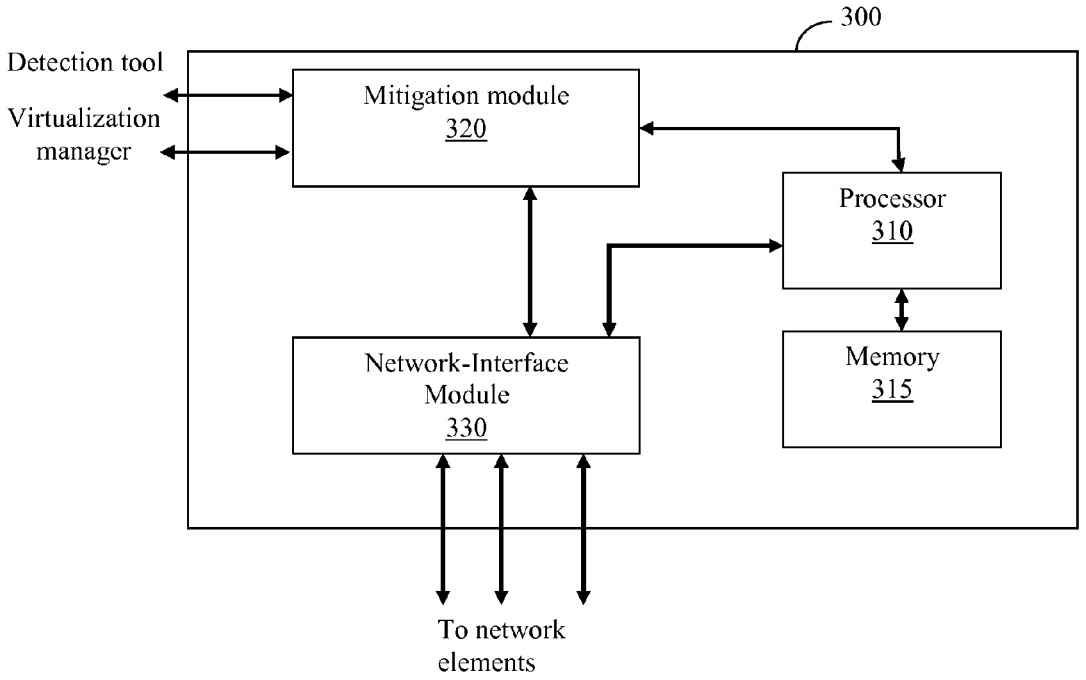
300
Detection tool
Virtualization manager
Mitigation module
320
Processor
310
Memory
315
Network-Interface Module
330
To network elements

FIG. 3

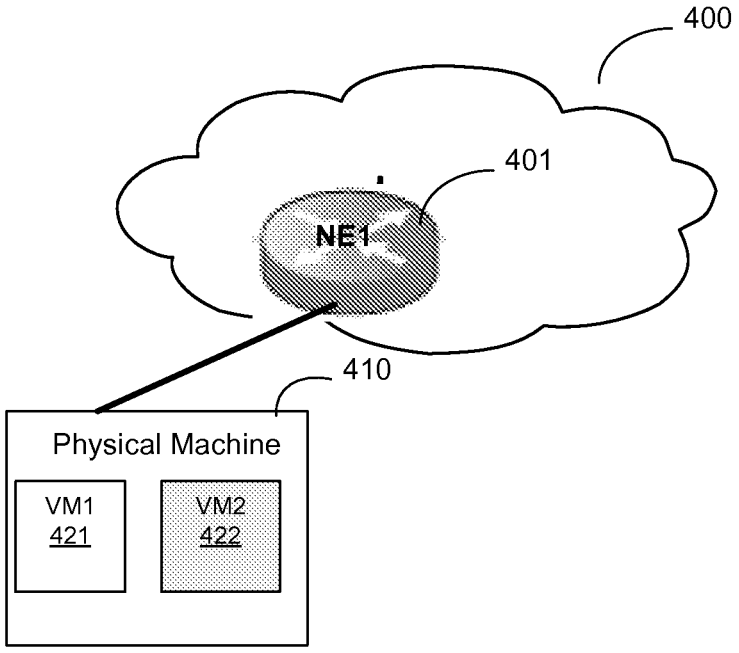

FIG. 4

SYSTEM AND METHOD THEREOF FOR MITIGATING DENIAL OF SERVICE ATTACKS IN VIRTUAL NETWORKS

TECHNICAL FIELD

This invention generally relates to virtual networks, and particularly to techniques for guaranteeing continuous service by computing resources that are connected to such networks.

BACKGROUND

A virtual machine (VM) is a software implementation of a computer that executes programs in a way that is similar to a physical machine. The virtualization technology allows the sharing of the underlying physical hardware resources between different virtual machines, each running its own operating system (as a guest), and a set of applications. Virtualization of computing and networking resources, such as servers, application delivery controllers (ADCs), and load balancers can improve the performance and resource utilizations of datacenters. Further, virtualization of such resources may reduce costs and overhead to the service providers. This can be achieved without compromising the isolation and independence of the physical machines, and the VMs hosted therein.

The isolation and independence of VMs allow creating "tenants" and providing multi-tenancy support in a datacenter. A "tenant" is a group of one more VMs hosted in a physical machine and provisioned to provide services to a particular customer, for example, based on a service-level agreement (SLA). Virtualization further provides a high level of dynamics. For example, VMs can be dynamically created, deleted, powered-on/off, added, or removed from their physical machines. The dynamic characteristics of VMs and virtual environments drive their utilization in network infrastructures (e.g., datacenters, private cloud, public cloud, etc.) which require high scalability. However, such requirements impose a great challenge on existing traditional networks, which are static and suffer from scalability limitations (e.g., flooding and STP).

To efficiently support virtualization technologies and multi-tenancy, virtualized networking architectures or virtual networks are proposed. An approach to build a virtual network is provided by the software defined networking (SDN). The SDN allows building a networking architecture that provides centralized management of network elements rather than a distributed architecture utilized by conventional networks. That is, in a distributed architecture each network element makes a routing decision based on the results of traffic processing and a distributed control mechanism. In contrast, in the SDN, a network element follows networking operations, such as routing decisions received from a central controller. The SDN can be implemented in wide area networks (WANs), local area networks (LANs), the Internet, metropolitan area networks (MANs), internet service provider (ISP) backbones, datacenters, and the like. A SDN-based network element is typically a switch that routes traffic according to the control of the central controller. The SDN may also include "standard" (or traditional) routers, switches, bridges, load balancers, and so on, as well as any virtual instantiations thereof.

In one configuration of a SDN, the central controller communicates with the network elements using an OpenFlow protocol which provides a network abstraction layer for such communication. Specifically, the OpenFlow protocol allows adding programmability to network elements for the purpose of packets-processing operations under the control of the central controller, thereby allowing the central controller to define the traffic handling decisions in the network element. To this end, traffic received by a network element that supports the OpenFlow protocol is processed and routed according to a set of rules defined by the central controller.

One type of virtual network is defined as a SDN based overlay networking architecture which is based on an overlay logical link established over the physical transport network. Overlay logical links are tunneled through the underlying physical networks using dedicated tunnel encapsulation performed by network virtualization edge devices, such as virtual switches and dedicated overlay gateways.

A significant problem facing the Internet community is that on-line businesses and organizations are vulnerable to malicious attacks. Recently, attacks have been committed using a wide arsenal of attack techniques and tools targeting both the information maintained by the on-line businesses and their IT infrastructure. Hackers and attackers are constantly trying to improve their attacks to cause irrecoverable damage, to overcome currently deployed protection mechanisms, and so on.

One of the common attacks against network infrastructures, such as datacenters and cloud-based infrastructures, includes denial-of-service (DoS) and distributed (DDoS) attacks (commonly referred to hereinafter as DoS attacks). Virtualized networking architectures, or virtual networks, expose some tenants to DoS attacks even when such tenants are not intentionally targeted by the attacker. This is due to the fact that multiple tenants share the same physical machine with a VM which may be targeted for the attack.

A non-limiting example is illustrated in FIG. **4**. In a network **400** there are shown, a physical machine **410** (e.g., a physical server) that hosts two VMs: VM **421** and VM **422**. A DoS attack directed to VM **421** affects the connectivity to physical machine **410** and/or a network element **401** connected thereto, which thereby can also cause VM **422** to become unavailable. This problem can significantly downgrade the quality of service (QoS) provided to the VMs **421** and **422**, and in particular, when the VMs are provisioned with different security service-level agreements (SLAs) to support different tenants.

For example, the VM **422** is provisioned with a security SLA including anti-DoS attack services, while the VM **421** is configured without any security services at all. The VM **421** and VM **422** are allocated to different tenants (customers). When the VM **421** is under DoS attack, the physical machine PM **410** is also affected, and thereby access to both VMs and their respective tenants is denied. While security services are not guaranteed to VM **421**, the QoS to VM **422** cannot be guaranteed.

As can be understood from this example, the segregation and isolation of VMs hosted in physical machines connected in virtualized networking architectures are compromised at least during DoS attacks. As a result, organizations and businesses lose revenue due to security-related downtime during instances when the service-level agreement (SLA) cannot be guaranteed to the paying customers.

A simple solution herein can be to provision both VMs with Anti-DoS services, still this solution is not efficient. It would be therefore advantageous to provide an efficient solution that ensures continuous services and the guaranteed

security SLA for a group of paying tenants during cyber-attacks, and particularly during DoS attacks.

SUMMARY

Certain embodiments disclosed herein include a method for efficient mitigation of denial of service (DoS) attacks in a virtual network to maintain a security service level agreement (SLA) guaranteed to protected objects. The method comprises ascertaining that a denial of service (DoS) attack is performed in the virtual network; checking if the DoS attack affects at least one physical machine hosting at least one protected object, wherein the protected object is provisioned with at least a guaranteed security service level agreement (SLA); determining, by a central controller of the virtual network, an optimal mitigation action to ensure the at least one security SLA guaranteed to the least one protected object; and executing the determined optimal mitigation action to mitigate the DoS attack, wherein the optimal mitigation action is facilitated by means of resources of the virtual network.

Certain embodiments disclosed herein also include a system for efficient mitigation of denial of service (DoS) attacks in a virtual network to maintain a security service level agreement (SLA) guaranteed to protected objects. The system comprises a mitigation module for ascertaining that a denial of service (DoS) attack is performed in the virtual network, the mitigation module is further configured to check if the DoS attack affects at least one physical machine hosting at least one protected object and determines an optimal mitigation action to ensure at least one security SLA guaranteed to the at least one protected object; and a network-interface module for instructing the network elements to divert traffic directed to the at least one physical machine to a secured resource, wherein the secured resource is set by the optimal mitigation action.

BRIEF DESCRIPTION OF THE DRAWINGS

The subject matter that is regarded as the invention is particularly pointed out and distinctly claimed in the claims at the conclusion of the specification. The foregoing and other objects, features, and advantages of the invention will be apparent from the following detailed description taken in conjunction with the accompanying drawings.

FIG. **1** illustrates a diagram of a virtual network utilized to describe the various embodiments of the invention.

FIG. **2** is a flowchart describing a method for mitigating DoS attacks against protected objects according to one embodiment.

FIG. **3** is a block diagram of the central controller constructed according to one embodiment.

FIG. **4** is a diagram illustrating the deficiencies of protecting tenants during conventional VMs deployment.

DETAILED DESCRIPTION

The embodiments disclosed herein are only examples of the many possible advantageous uses and implementations of the innovative teachings presented herein. In general, statements made in the specification of the present application do not necessarily limit any of the various claimed inventions. Moreover, some statements may apply to some inventive features but not to others. In general, unless otherwise indicated, singular elements may be in plural and vice versa with no loss of generality. In the drawings, like numerals refer to like parts through several views.

FIG. **1** is an exemplary and non-limiting diagram illustrating a topology of a virtual network **100** utilized to describe the various embodiments disclosed herein. The virtual network **100** includes a central controller **101** and a plurality of network elements **102-1** through **102**-N. To virtual network **100** are further connected a security system **120**, a plurality of physical machines **130-1** through **130-*m***, and a client **140**. The client **140** utilizes services from VMs hosted in the physical machines **130**, where the communication is established over a legacy network **150** and the virtual network **100**. The legacy network **150** may be, for example, a WAN, a LAN, the Internet, an Internet service provider (ISP) backbone, a corporate network, a datacenter, and the like.

The client **140** may be a legitimate client or an attack tool. It should be noted that although one client **140** and one security system **120** are depicted in FIG. **1** merely for the sake of simplicity, the embodiments disclosed herein can be applied to a plurality of clients and security systems. The architecture of the virtual network **100** and the physical machines connected thereto, are utilized in datacenters, cloud-based infrastructure, and the like.

Each of the physical machines **130-1** through **130-*m*** hosts one or more virtual machines (VMs). For example, a physical machine **130-1** hosts the VMs **131-1**, **132-1** and **133-1** the physical machine **130-2** hosts VMs **131-2** and **132-2**, while the physical machine **130-3** hosts VM **131-3**. The hosted VM may be configured with different security SLAs. For example, the VM **131-1** may be provisioned to provide a high security SLA, including DoS mitigation features, while VM **133-3** may be provisioned with no security SLA at all.

According to various embodiments disclosed herein, at least two zones are configured in the virtual network **100**: a low SLA zone (LSZ) and a high SLA zone (HSZ). The HSZ includes computing resources, such as physical machines, and inline security devices selected and provisioned to provide high SLA including, but not limited to, a security SLA guaranteed to each protected object (or "paying customer). In a preferred embodiment, the computing resources in the HSZ ensure continuous operating in an event of a DoS attack against the protected object. For example, the physical machines in the HSZ are connected to network elements with high bandwidth capability, and are machines with high processing power, high network bandwidth, and so on. In one embodiment, physical machines in the HSZ can be pre-allocated and/or dynamically assigned to the HSZ to process traffic during a DoS attack, as the case may be.

In contrast to the HSZ, the LSZ includes physical machines (computing resources) that are not required to ensure SLAs. It should be noted that some physical machines are allocated to neither one of the HSZ or the LSZ. For the sake of simplicity and without limiting the scope of the disclosed embodiments, the physical machine **130-2** is allocated to the LSZ, the physical machine **130-3** is allocated to the HSZ, and the physical machines **130-1** and **130-*m*** do not belong to any of the zones.

According to one embodiment, security services including, but not limited to, DoS attacks detection and mitigation services are provided to a set of predefined protected objects. A protected object is a VM or a group of VMs assigned to a tenant (e.g., a paying customer) being entitled to receive security services defined in a SLA. A protected object may be configured by an IP address for a dedicated server (a single VM) protection, or by a variable size subnet for a network protection (a group of VMs). The protected object, in one embodiment, can be a server.

The security system **120** processes traffic for the purpose of mitigating and terminating DoS (including DDoS) attacks. In one embodiment, the security system **120** is deployed as a "scrubbing center", i.e., an out-of-path deployment. Typically, suspicious traffic is passed through a scrubbing center (the system **120**) only during a DoS attack, which performs one or more mitigation actions on the incoming traffic and forwards legitimate clean traffic back to the network. In an embodiment, the system **120** acts as a security server that detects and mitigates encrypted and large-scale DoS/DDoS attacks as detailed, for example, in U.S. patent application Ser. Nos. 13/425,978 and 13/306,360 to Chesla, et al., and hereby incorporated by reference. The security system **120** may be configured as a virtual appliance or physical appliance.

In certain embodiments, an attack detection tool **160** and a virtualization manager **170** are connected to the central controller **101** of the virtual network **100**. The communication of the central controller **101** with the security system **120**, detection tool **160**, and virtualization manager **170** may be achieved through application programming interfaces (APIs).

The attack detection tool **160** provides an indication to the controller **101**, if the traffic directed to one of the VMs is suspected of including DoS threats. The detection is based on network and bandwidth statistics, such as an average number of active connections, an average number of packets received per second, and so on. Other techniques, discussed in the related art, for detection of DoS attacks can be implemented by the tool **160**. In another embodiment, the central controller **101** implements the detection techniques to detect DoS attacks.

A detection of a DoS attack, either by the tool **160** or the controller **101**, can be performed for each object, protected or unprotected, with granularity of a specific traffic portion/protocol: TCP, UDP, ICMP, and the like. The attack can also be detected for specific L4 service (TCP or UDP port). The virtualization manager **170** manages VMs in the physical machines **130**. This includes, but is not limited to, migrating, creating, deleting, and adding VMs. A migration of a VM occurs from one physical machine to another. Typically, a VM migration process is performed by incrementally copying the memory image of the VM including the content of its registers, from a source physical machine to a target physical machine. Once the memory image has been copied, the execution of the VM on the source physical machine is halted, and execution then resumes on the target physical machine. The execution of the VM on the target machine is resumed from the next instruction subsequent to the instruction step in which it was stopped.

The virtual network **100** may be based on the networking architectures including, for example, a software defined network (SDN), a SDN based overlay network, and the like. As noted above, in a SDN the central controller **101** may communicate with the network elements **102** using, for example, an OpenFlow protocol which provides a network abstraction layer for such communication. In a SDN based overlay network, the controller **101** manages network elements **102** and other devices connected to the network through an address dissemination process.

According to various embodiments disclosed herein, the central controller **101** carries out a process that ensures continuous and uninterrupted services to protected objects during a DoS attack, thereby providing the guaranteed SLA. It should be noted that the attack may be performed against the protected object or VM(s) in the vicinity of the protected object (e.g., VM(s) in the same physical machine(s) as the protected object). The central controller **101**, upon detection of the DoS attack against a protected object, performs one or more mitigation actions designed to allow the protected object to provide the guaranteed SLA. In one embodiment, an indication of a detected attack including the recommended mitigation action is sent as an alert to a security manager who can trigger the attack mitigation procedures.

The mitigation actions performed by the central controller **101** are described herein with a reference to the exemplary and non-limiting configuration of VMs **131-1**, **132-1**, and **133-1** hosted in the physical machine **130-1**. According to this example, the VM **131-1** is a protected object, i.e., provisioned with security SLA, while VMs **132-1** and **133-1** are unprotected objects. Thus, the detection tool **160** and/or the controller **101** monitors traffic and detects attacks addressed to the VMs hosted in the physical machines.

When the controller **101** receives or detects a DoS attack against any of the VMs hosted in the physical machine **130-1** (i.e., that includes the protected object (VM **131-1**)), the controller **101** determines which mitigation action to execute and on which entity. The entity may be any of the VMs hosted in the physical machine **130-1** or traffic directed thereto. The controller **101** performs one or more of the following mitigation actions: traffic diversion and migration of one or more protected objects or one or more unprotected objects. In one embodiment, the determination of which mitigation action to perform is based, in part, on the available computing resources, including, but not limited to, mitigation resources with the aim of minimizing the consumption of such resources. That is, the controller **101** is configured to efficiently mitigate the attack against protected objects with minimal consumption of computing and mitigation resources.

The traffic diversion includes rerouting incoming traffic originally directed to the protected object, first to the security system **120**, and then injecting clean traffic processed by the system **120** back to the network **100**, to then be sent to the protected object (e.g., VM **131-1**). The security system **120** applies one or more DoS mitigation techniques on the incoming traffic. Such techniques include, but are not limited to, SYN attack protection, packet anomalies detection, and so on.

It should be emphasized that the diversion of suspicious traffic is performed on-the-fly without prior provisioning of the network elements **102**. Various embodiments can be utilized for traffic diversion and injections. In one embodiment, the controller **101** configures the flow table of each network element **102** to direct traffic to the security system **120** and back to the destination of the protected object. In another embodiment, dedicated APIs in the central controller **101** allow configuring the controller **101** to perform traffic diversion. In yet another embodiment, in a SDN based overlay network architecture network, the controller **101** instructs an overlay gateway to send traffic addressed to the protected object through a tunnel that passes through system **120** instead of through the original tunnel.

The central controller **101** monitors the condition of the protected object, by querying the security system **120** to check if the attack has been alleviated. If not, the controller **101** continues to divert traffic to the system **120** and/or utilize a different mitigation action, such as migration of the protected object. If the DoS attack has been terminated, then the controller **101** stops the traffic diversion.

Other action includes migrating the one or more VMs associated with the protected object to the HSZ. The migration process is performed by the virtualization manager **170** when instructed by the central controller **101**. In this

example, the VM **131-1** (which is the protected object) is migrated to a physical machine **130-3**. As mentioned earlier, the HSZ is an isolated area in the network that includes computing and networking resources, such as physical machines and inline security devices designed or configured to provide the SLA that is guaranteed to the protected object during an on-going DoS attack. Thus, migrating the protected object to a zone that is over-provisioned with computing and networking resources significantly reduces the probability that an attacker would succeed in its attempt to cause the protected object to become unavailable.

It should be noted that the protected object can also be migrated to the HSZ when an attack is committed against the unprotected objects, e.g., VM **132-1** and/or **133-1** in the machine **130-1**. Although the on-going DoS attack is not directed against a protected object (VM **131-1**), the guaranteed SLA can be easily supported by placing the VM **131-1** in the HSZ. When the controller **101** detects or receives an indication that the DoS attack has been terminated, the controller **101** instructs the virtualization manger **170** to migrate the protected object back to its original physical machine. That is, the VM **131-1** is migrated back to the physical machine **130-1**. The protected object can also be migrated to any physical machine outside the HSZ

Another mitigation action performed by the central controller includes the migration of VMs not defined as protected objects, to the LSZ. This action is taken when a DoS attack is performed against one or more VMs that are not protected objects. The objective of this mitigation action is to provide the SLA that has been guaranteed to the protected objects, by eliminating the attacker traffic from reaching the physical machines where the protected objects are hosted. For example, if a DoS attack is performed against VM **132-1**, the central controller **101** instructs the virtualization manager **170** to migrate the VM **132-1** to the physical machine **130-2** located in the LSZ.

As mentioned earlier, the determination of which mitigation action to perform is made based on the available computing and mitigation resources with the aim of minimizing the consumption of such relatively expensive resources. In one embodiment, the determination is based on a configuration of the physical machine including the number of protected objects versus unprotected objects hosted in a physical machine to which the attack traffic is directed. Specifically, the number of protected objects is compared to a predefined threshold. If that number exceeds that threshold and the attack is against the unprotected objects, then the unprotected objects are migrated to LSZ. For example, if such a physical machine hosts 100 VMs, 99 of which are protected and 1 becomes an unprotected object under attack, and there is a shortage of mitigation resources, then the unprotected object (VM) is migrated to the LSZ.

Alternatively, if the number of protected objects is below the threshold and the attack is against the unprotected objects, then the protected objects are migrated to HSZ. As an example, if such a physical machine's host is configured with 99 unprotected objects being under attack, and 1 protected object, then the protected object (VM) is migrated to the HSZ, if the attack is addressed to one or more unprotected objects. In the above example, the threshold has been set to 10, i.e., a tenth of the number of VMs hosted by the physical machine.

It is further determined if the number of protected and unprotected objects which are under attack is substantially equal, for example, by comparing the ratio of the protected and unprotected objects to another threshold. In such a case, the traffic to the protected objects may be diverted through the security system **100**. It should be noted that different actions can be performed on different objects. For example, some protected objects hosted in a physical machine may be migrated to the HSZ, while traffic to other protected objects in the same machine may be diverted through the security system **120**.

In another embodiment, the determination of the efficient action is based, in part, on a current load of physical machines, or other resources, in the HSZ and/or the security system **120**. For example, if the system **120** is loaded for cleaning traffic of other objects in the network **100**, diverting traffic of additional objects to the system **120** would not be the optimal action. It should be noted that mitigation action can be determined based on any one of, or any combination of, the current load of resources in the HLZs and system **120**, current available resources in the HLZs, and the configuration of a physical machine hosting the protected objects, i.e., allocation of protected and unprotected objects in the physical machine.

FIG. **2** shows a non-limiting and exemplary flowchart **200** describing a method for enabling the continuous operation of protected objects during DoS attacks according to one embodiment. As noted above, protected objects include VMs assigned to customers with guaranteed high security SLA. In an embodiment, the method is performed by a central controller (e.g., controller **101**) of a virtual network, e.g., network **100**. The method is also described with a reference to the components shown in FIG. **1**.

The method starts at S**210**, when the central controller **101** ascertains that a DoS attack is performed in the virtual network. The attack indication designates which object, unprotected or protected (VM) is under attack. As discussed in detail above, the attack can be detected by means of the attack detection tool **160** or the central controller **101**.

At S**220**, a check is made to determine if the on-going DoS attack affects at least one physical machine hosing one or more protected objects. The DoS attack is determined to affect such a machine if the DoS attack is committed against at least one protected object or unprotected object hosted therein. The check can be performed, for example, by querying the virtualization manager **170** to find out what types of objects are hosted in a particular machine. If S**220** results with an affirmative answer, execution continues with S**230**; otherwise, execution ends.

At S**230**, at least one optimal mitigation action to be applied on objects in the physical machine receiving the attack traffic is determined. The mitigation action can be migration of one or more protected objects to a HSZ, migration of one or more unprotected objects to a LSZ, diverting traffic directed to the protected objects to the security system **120**, or any combination thereof. The optimal mitigation action is determined based, in part, on a current load of physical machines in the HSZ and/or the security system **120**, available resources in the HSZ, and the configuration of the physical machine receiving the attack traffic.

At S**240**, the selected mitigation action is executed. Specifically, in the diversion action, the network elements **102** of the virtual networks are instructed by the central controller **101** to divert traffic addressed to the targeted protected object through the security engine **120**. As noted above, the security engine **120** applies one or more DoS mitigation techniques on the received traffic to produce 'clean' traffic, which is then sent to the protected object. The various techniques for diverting the traffic in the virtual networks are discussed in detail above.

The migration action includes VM migration of each protected or unprotected object to a different zone in the network. The one or more protected objects hosted in a physical machine receiving the attack traffic are migrated to the HSZ. For example, the protected VM **131-1** is migrated to the physical machine **130-3** located in a HSZ. As noted above, the HSZ includes computing and network resources that are provisioned to support the SLA guaranteed to the protected object. Migration of the unprotected objects includes migrating at least one VM which is the target of a DoS attack, hosted in the machine receiving the attack traffic, to the LSZ.

At S**250**, it is checked if the detected DoS attack has been terminated. If so, execution continues with S**260**; otherwise, execution waits at S**250**. At S**260**, the controller **101** reverts the virtual network **100** to a configuration prior to the execution of the migration action. That is, the migrated protected or unprotected objects are instantiated on the original physical machine or another physical machine located in the original zone. If the traffic was diverted through the system **120**, then the network elements **102** are instructed to direct traffic to the original route.

It should be noted that the method ensures that the protected objects will have the sufficient computing and network resources to provide the guaranteed services. This is performed by at least one of: mitigating the attacks by diverting protected object traffic to cleaning center, moving the protected objects to the HSZ, and migrating VMs under attack which are not provisioned as protected objects to the LSZ. The mitigation actions are realized without prior configuration of the network elements. Furthermore, all the mitigation actions are agnostic to the type of the Internet protocol. For example, the mitigation actions (i.e., traffic diversion and VMs migration) disclosed herein can be performed for any type of application layer (e.g., HTTP, SIP, etc.) and any type of transport protocol (e.g., SMTP, UDP, etc.).

FIG. **3** shows an exemplary and non-limiting block diagram of the central controller **300** constructed according to one embodiment. The central controller **300** is operable in virtual networks. The controller **300** is configured to at least execute the methods described in greater detail above.

The controller **300** includes a processor **310** coupled to a memory **315**, a mitigation module **320**, and a network-interface module **330**. The mitigation module **320** determines if there is an on-going attack in the network and performs one or more of the mitigation actions as discussed in detail above. The mitigation module **320** interfaces with the attack detection tool **160** to receive attack indications and statistics. The module **320** also interfaces with the virtualization manager **170** to provide instructions to migrate VMs. In addition, in one embodiment, the mitigation module **320** queries the virtualization manager **170** as to the type of SLA with which each VM is configured, i.e., to determine if a VM is a protected object and to get its location within a physical host. In certain implementations, the mitigation module **320** is configured with the information as to which VMs are protected and which are unprotected.

The network-interface module **330** allows the communication with the network elements of the virtual network. The communication is performed in part to instruct the network elements to divert the traffic to the security system **100**, LSZ, and HSL. In one embodiment, such communication uses, for example, the OpenFlow protocol discussed above, through a secure channel established with each network element. In another embodiment, the communication is achieved through a control channel. The network-interface module **330** also communicates with the mitigation module **320** to provide traffic statistics gathered by the network elements. The module **320** also provides traffic diversion instructions and rules to the network elements through the network-interface **330**, when a diversion action is performed. The processor **310** uses instructions stored in the memory **315** to execute tasks traditionally performed by the central controllers of virtual networks.

The foregoing detailed description has set forth a few of the many forms that different embodiments of the invention can take. It is intended that the foregoing detailed description be understood as an illustration of selected forms that the invention can take and not as a limitation as to the definition of the invention.

Most preferably, the various embodiments discussed herein can be implemented as hardware, firmware, software, or any combination thereof. Moreover, the software is preferably implemented as an application program tangibly embodied on a program storage unit or computer readable medium. The application program may be uploaded to, and executed by, a machine comprising any suitable architecture. Preferably, the machine is implemented on a computer platform having hardware such as one or more central processing units ("CPUs"), a memory, and input/output interfaces. The computer platform may also include an operating system and microinstruction code. The various processes and functions described herein may be either part of the microinstruction code or part of the application program, or any combination thereof, which may be executed by a CPU, whether or not such computer or processor is explicitly shown. In addition, various other peripheral units may be connected to the computer platform such as an additional data storage unit and a printing unit. Furthermore, a non-transitory computer readable medium is any computer readable medium except for a transitory propagating signal.

What is claimed is:

1. A method for efficient mitigation of denial of service (DoS) attacks in a virtual network to maintain a security service level agreement (SLA) guarantee to protected objects, comprising:

ascertaining, by a central controller of the virtual network, that a denial of service (DoS) attack is performed in the virtual network;

checking if the DoS attack affects at least one physical machine, the at least one physical machine hosting at least one protected object and at least one unprotected object, wherein the at least one protected object is provisioned with at least a guaranteed security service level agreement (SLA) and the at least one unprotected object is not provisioned with any guaranteed SLA;

determining, by the central controller of the virtual network, an optimal mitigation action to ensure the at least one security SLA guaranteed to the least one protected object during the DoS attack, wherein the optimal mitigation action includes at least migrating any of the at least one unprotected and the at least one protected object to a different SLA zone; and

executing the determined optimal mitigation action to mitigate the DoS attack, wherein the optimal mitigation action is facilitated by means of resources of the virtual network.

2. The method of claim **1**, wherein the DoS attack is detected using at least any one of: a DoS attack detection tool and the central controller.

3. The method of claim 1, wherein checking if the DoS attack affects the at least one physical machine further comprises:

checking if the DoS attack is against the at least one protected object or the at least one unprotected object.

4. The method of claim 3, wherein each of the at least one protected object and the at least one unprotected object is a virtual machine, wherein the at least one protected object is assigned to a tenant.

5. The method of claim 4, wherein the different SLA zone is a high SLA zone, wherein the high SLA zone is at least a portion of the virtual network that includes computing, mitigation, and networking resources configured to provide the guaranteed security SLA to the protected entity.

6. The method of claim 4, wherein the optimal mitigation action includes diverting traffic directed to the at least one physical machine to a security system, wherein the security system applies one or more DoS mitigation techniques on the diverted traffic.

7. The method of claim 6, wherein diverting the traffic to the security system is performed by the central controller on-the-fly without prior provisioning of network elements of the virtual network.

8. The method of claim 6, wherein the different SLA zone is a low SLA zone, wherein the low SLA zone is at least a portion of the virtual network that includes computing and networking resources configured to merely allow execution of unprotected objects without any guaranteed security SLA.

9. The method of claim 6, wherein the determination of the mitigation action is based on at least one of: a configuration of the at least one physical machine, a current load of the security system, a current load of the computing and networking resources of the high SLA zone, and available computing and networking resources of the low SLA zone.

10. The method of claim 1, further comprising:

checking if the DoS attack is terminated; and

reverting to a configuration of the virtual network prior to the execution of the mitigation action.

11. The method of claim 1, wherein the virtual network is any one of: a software defined network (SDN) utilizing an OpenFlow provisional protocol and a SDN-based overlay network.

12. A computer software product embedded in a non-transient computer readable medium containing instructions that when executed by one or more processors perform process for efficient mitigation of denial of service (DoS) attacks in a virtual network to maintain a security service level agreement (SLA) guarantee to protected objects, the process comprising:

ascertaining, by a central controller of the virtual network, that a denial of service (DoS) attack is performed in the virtual network;

checking if the DoS attack affects at least one physical machine, the at least one physical machine hosting at least one protected object and at least one unprotected object, wherein the at least one protected object is provisioned with at least a guaranteed security service level agreement (SLA) and the at least one unprotected object is not provisioned with any guaranteed SLA;

determining, by the central controller of the virtual network, an optimal mitigation action to ensure the at least one security SLA guaranteed to the least one protected object during the DoS attack, wherein the optimal mitigation action includes at least migrating any of the at least one unprotected and the at least one protected object to a different SLA zone; and

executing the determined optimal mitigation action to mitigate the DoS attack, wherein the optimal mitigation action is facilitated by means of resources of the virtual network.

13. A central system of a virtual network for efficient mitigation of denial of service (DoS) attacks in the virtual network to maintain a security service level agreement (SLA) guarantee to protected objects, comprising:

a processor; and

a memory, the memory containing instructions that, when executed by the processor, cause the central system to be a central controller of the virtual network and configure the central system to:

ascertain that a denial of service (DoS) attack is performed in the virtual network;

check if the DoS attack affects at least one physical machine, wherein the at least one physical machine hosting at least one protected object and at least one unprotected object, wherein the at least one protected object is provisioned with at least a guaranteed security service level agreement (SLA) and the at least one protected object is not provisioned with any guaranteed SLA;

determine an optimal mitigation action to ensure compliance with the at least one security SLA guaranteed to the least one protected object during the DoS attack, wherein the optimal mitigation action includes at least migrating any of the at least one unprotected and the at least one protected object to a different SLA zone; and

execute the determined optimal mitigation action to mitigate the DoS attack, wherein the optimal mitigation action is facilitated by means of resources of the virtual network.

14. The system of claim 13, wherein the DoS attack is detected using at least one of: a DoS attack detection tool and the central controller.

15. The system of claim 13, wherein the system is further configured to:

check if the DoS attack is against the at least one protected object or at least one unprotected object hosted together with the at least one protected object in the at least one physical machine.

16. The system of claim 15, wherein each of the at least one protected object and the at least one unprotected object is a virtual machine, wherein the at least one protected object is assigned to a tenant.

17. The system of claim 16, wherein the different SLA zone is a high SLA zone, wherein the high SLA zone is the secured resource and includes at least a portion of the virtual network that includes computing, mitigation, and networking resources configured to provide the guaranteed security SLA to the protected entity.

18. The system of claim 16, wherein the optimal mitigation action includes diverting traffic directed to the at least one physical machine to a security system, wherein the security system applies one or more DoS mitigation techniques on the diverted traffic, and wherein the secured resource is the security system.

19. The system of claim 18, wherein the system is further configured to divert traffic on-the-fly without prior provisioning of network elements of the virtual network.

20. The system of claim 18, wherein the different SLA zone is a low SLA zone, wherein the secured resource is the low SLA zone, wherein the low SLA zone is at least a portion of the virtual network that includes computing and networking resources configured to merely allow execution of VMs without any guaranteed security SLA.

21. The system of claim **18**, wherein the determination of the mitigation action is based on at least one of: a configuration of the at least one physical machine, a current load of the security system, a current load of the computing and networking resources of the high SLA zone, and available computing and networking resources of the low SLA zone.

22. The system of claim **13**, wherein the system is further configured to:

check if the DoS attack is terminated; and

revert to a configuration of the virtual network prior to the execution of the mitigation action.

23. The system of claim **13**, wherein the virtual network is any one of: a software defined network (SDN) utilizing an OpenFlow provisional protocol and a SDN-based overlay network.

* * * * *